2026

SPECIFICATION GUIDE

REV-A-SHELF®

MESSAGE TO OUR VALUED CUSTOMERS:

Following our milestone anniversary, Rev-A-Shelf® continues to expand and refine our product portfolio to better support today's evolving cabinetry and design needs. Our focus remains on delivering cohesive solutions that combine wood craftsmanship, thoughtfully engineered organization and integrated lighting.

With the addition of InnovaShelf® floating shelf brackets to our portfolio, alongside Omega National Products by Rev-A-Shelf®, Tresco® Lighting, and our core Rev-A-Shelf® organization systems, we now offer a more complete collection of storage, shelving, hood and lighting solutions under one umbrella. Our updated Specification Guide reflects this growth and continues to serve as a trusted resource for designers, fabricators, cabinet shops and dealers.

What's New in 2026?

Craftsman Collection Expansion – Now featuring Walnut alongside our established Maple line
EDGE Closet System - A refined modular storage solution for elevated closet applications
Omega National Products by Rev-A-Shelf® - Expanded hood and floating shelf assortments
InnovaShelf® Brackets - Adjustable floating shelf mounting systems engineered for strength and installation flexibility
Tresco® Lighting Advancements - Introduction of 24V EZ Cabinet Lighting and a strategic shift from 12V to a more focused, comprehensive 24V lighting platform

This next chapter represents a more integrated approach to cabinetry - where organization, wood components, shelving and lighting are designed to work together seamlessly.

Our factory and independent representatives are available to connect you with distributor partners nationwide. Visit Rev-A-Shelf.com to locate stocking distributors in your area and learn how we can support your business.

Thank you for your continued partnership.











REV-A-SHELF®
Innovation through Organization™

SPECIFICATION GUIDE 2026

tresco lighting | Omega National Products | INNOVASHELF

What's Inside

Introduction 2
Contents 3
American Made 4
How-to's 5
New Products 6
Craftsman Collection 12
Edge Closet Collection 26
Easy Cabinet Lighting 50
Waste Solutions 64
Blind Corner Solutions 95
Sink Solutions 110
Base Solutions 135
Tall Pantry Solutions 180
Drawer Solutions 194
Wall Solutions 229
Vanity Solutions 247
Closet Solutions 273
Lazy Susan Solutions 306
Hardware 337
LED Lighting 345
Hoods & Floating Shelves 378
Index 432
Warranty/PROP 65/Terms 450
Homes for Our Troops 451

Proudly "Made in America" and manufactured and assembled in our two Kentucky facilities



Employing a local workforce of more than 400



America Proud

Louisville-based and family owned for three generations

PRODUCT CHART

We've simplified our product chart and added a couple of columns to help make your buying decisions easier.

Drawer Pullout w/ Euro Slides		
PRODUCT	DESCRIPTION	DIMS
4WDB-12	Pullout Drawer	11" (280 mm) W x 18-1/2" (470 mm) D x 5-5/8" (143 mm) H
4WDB-15	Pullout Drawer	14" (356 mm) W x 22-1/2" (572 mm) D x 5-5/8" (143 mm)
Drawer Pullout w/ BLUM Soft-Close		
4WDB4-18SC-1	Standard Drawer	14" (356 mm) W x 21-5/8" (549 mm) D x 4-7/8" (124 m
4WDB7-18SC-1	Tall Drawer with dividers	14" (356 mm) W x 21-5/8" (549 mm) D x 8" (203 mm) H
4WDB4-24SC-1	Standard Drawer	20" (508 mm) W x 21-5/8" (549 mm) D x 4-7/8" (124 mm
4WDB7-24SC-1	Tall Drawer with dividers	20" (508 mm) W x 21-5/8" (549 mm) D x 8" (203 mm) H

CAB	FIN
B15	Ma
B18	M

"CAB" = Typical Cabinet. We get it, professionals just want to know what size cabinet the product is designed for. So we've tried to identify the typical cabinet for each of our products.

"MCO" = Minimum Cabinet Opening. Our recommended minimum cabinet opening dimensions are based upon installation into 1-1/2" face frame cabinets. This is important because occasionally the width of the product is wider than the part of the product that pulls out of the cabinet.

MCO
12" (305 mm)
15" (381 mm)

When both face frame and frameless dimensions are needed, we have listed them as FFMCO and FLMCO. The FF is for face frame and the FL for frameless (aka full access).

When both face frame and frameless typical cabinet recommendations are provided we have listed them as FF for face frame and FL for frameless (aka full access).

Note: unless otherwise noted, typical cabinet recommendations are based upon 1-1/2" face frame cabinet construction.

COLOR NUMBER CODE

White	11	Almond	15	Red	16
Black	18	Blue	22	Orange	20
Orion Gray	13	Gray	14	Yellow	21
Silver	17	Green	19	Brown	10

WHAT DOES THIS MEAN?

You will notice that our charts contain columns that house MCO's and CAB's for that specific product. Below you will find a bank of what those letters mean.

REV-A-SHELF® Innovation through Organization™

FF	FL	FH	B	T	W	SB	VB	BC
Face Frame	Full Access (frameless)	Full Height	Door/ Drawer	Tall Cabinet	Wall Cabinet	Sink Base	Vanity Base	Blind Corner
a cabinet that has a fixed frame to the front of the cabinet	a cabinet that allows full accessibility by eliminating the face frame of the cabinet	a cabinet without a drawer opening, using the whole height of the cabinet	a cabinet that has a drawer atop the cabinet opening	Tall/ Utility cabinets	a cabinet designed to be mounted above counter tops	a cabinet designed to be used with a sink	a shorter depth cabinet designed to be used in a vanity or bathroom	a cabinet that is in the corner of your kitchen

4PTTD Series

Paper Towel & Foil Wrap Tiered Drawer

Keep your countertops clutter-free while maintaining easy access to your paper towels with the 4PTTD Series! This innovative tiered drawer system combines organization and convenience, featuring ample storage space, a removable dowel for quick refills and smooth, soft-close slides.

This design also includes three integrated holders with cutting blades, perfect for aluminum foil, plastic wrap and parchment paper, making meal prep and cleanup effortless.





CHECK IT OUT → P197





4PTD Series

Paper Towel Drawer

Reduce clutter on your countertops while still enjoying easy access to your paper towels with the 4PTD Series! This innovative drawer system offers ample storage space and a removable dowel for easy refilling.





CHECK IT OUT → P196



5PDYO Series

Pull-Down Organizer

Revamp your kitchen storage with the sleek and trimmable Yo-Yo Pull-Down Shelving System. Designed for wall cabinets, this space-saving system offers smooth, gas-spring-assisted operation and a side-mount design that maximizes storage space.

Built with durable sheet metal in a luxurious black finish, it features a strong weight capacity and customizable shelving options. Choose from the included maple shelves or use your own substrate for a personalized touch. Perfect for enhancing both style and functionality in any kitchen!

CHECK IT OUT → P230

4SSB Series

Stainless-Steel Baskets

Store your produce in style with the 4SSB Series Stainless-Steel Produce Baskets! These removable baskets are designed for base cabinets and intended for use without cabinet doors. They are available in your choice of walnut or maple construction and feature either a stainless-steel bottom with matching handles or a luxurious black bottom with matching handles. The perforated design promotes ample air circulation and prevents moisture buildup, keeping your fruits and vegetables fresher for longer. Enjoy simple installation with trim-to-fit side rails and easy transportation using the built-in handles.

CHECK IT OUT → P136



4VDI Series

Vanity Drawer Insert

Are you tired of cluttered countertops and the hassle of searching through tangled wires in your bathroom cabinet every time you want to style your hair? Say goodbye to the chaos and hello to the 4VDI Maple Vanity Drawer Insert with Stainless-Steel Bins from Rev-A-Shelf®! This innovative drawer insert brings organization and efficiency to your morning routine. Equipped with stainless-steel bins and designated storage compartments for your brushes and accessories, this drawer insert keeps your styling tools neatly arranged and easily accessible. Now you can enjoy the convenience of blow drying, straightening, crimping, or curling your hair without the frustration of tangled tools!



CHECK IT OUT → P253



SBDTF/SBVDTF Series

Flexible Drip Tray

Water damage never gives a warning but our SBDTF & SBVDTF Series Drip Trays are ready when it happens. Designed to be your cabinet's first line of defense, these low-profile, flexible trays install easily, even in tight spaces and help stop small leaks from becoming big problems. Each tray holds up to 2.2 qts., channeling water safely out where it can be seen, while resisting everyday household chemicals and cleaning up in seconds. The trimmable design ensures a perfect fit every time.

Now available in almond and white, the SBDTF and SBVDTF Series fit 30", 36" and 42" sink bases and 24", 30" and 36" vanity cabinets respectively, making smart protection easy to specify. Because peace of mind should come standard under every sink.

CHECK IT OUT → P114



53WC Series

Steel Bottom Mount

The 53WC Series from Rev-A-Shelf® brings a touch of modern Italian design to your kitchen. With a range of sizes and finishes to fit any decor, it features soft-close slides, a door-mount kit, and hassle-free installation for a sleek, functional solution.

CHECK IT OUT → P78

5349 Series

Aluminum Bottom Mount

The 5349 Series from Rev-A-Shelf® sets a new standard for premium design and functionality. Featuring Italian-inspired elegance, these units offer a heavy-duty aluminum frame and smooth, soft-closing slides for effortless operation. The included door-mount hardware allows you to seamlessly attach your cabinet door, creating a sleek, cohesive look that integrates beautifully into your cabinetry.

CHECK IT OUT → P76



4FWI Series

Foil Wrap Insert

Stop struggling with hard-to-store boxes of aluminum foil, plastic wrap, parchment paper and more. Restore order to your drawers with the all-new design 4FWI Series Foil Wrap Insert from Rev-A-Shelf®.



CHECK IT OUT → P198



4PIL Series

Ball-Bearing Slide Bracket

Do you need pilaster brackets to use with your own ball-bearing slides? We've got you covered! Our 4PIL-BB set includes both left and right pilaster brackets for front and back installation, along with screws - everything you need for a quick and easy setup!

CHECK IT OUT → P154/182



RV Series
35/50 qt. Lids

Our Bi-Directional Lids deliver flexible access designed to adapt to any cabinet configuration. Each lid opens front-to-back or side-to-side, with a tool-free adjustment that makes switching orientations fast and effortless. Available in all of our waste container colors, these lids are engineered to fit both our 35 qt. containers and the newly designed 50 qt. waste containers providing consistent style, seamless compatibility and everyday convenience.

CHECK IT OUT → P70

RV Series
50 qt. Waste Bin

The new 50 qt. waste bin shares the same profile and lid compatibility as our 35 qt. design, now allowing for use in 18" full-height cabinets. Durable, easy to clean and proudly made in the USA, it delivers smarter storage.

CHECK IT OUT → P68



CRAFTSMAN COLLECTION

Elevate your cabinetry with the Craftsman Collection by Rev-A-Shelf®, our premier line of high-end cabinet accessories. Designed for those who demand the perfect blend of style and functionality, this collection redefines sophistication with sleek, modern lines and premium craftsmanship. New for 2026, the Craftsman Collection introduces a rich walnut option alongside its classic maple offering.

Each piece features striking black accents, offering a contemporary aesthetic that complements any kitchen or living space. Designed with both durability and elegance in mind, the Craftsman Collection combines stunning aesthetics with the innovative performance you expect from Rev-A-Shelf®.

From seamless storage solutions to elegant organizational details, the Craftsman Collection transforms cabinets into a curated design statement. Where form meets function, every detail is meticulously crafted to enhance your space with timeless appeal.

Step into a world of luxury and refinement with the Craftsman Collection, where inspired design reimagines cabinetry organization.

COLLECTION FEATURES:

(MAPLE OR WALNUT)

Solid wood construction with recessed black wire accents



Concealed adjustable rear stop for added safety and stability



Patented black adjustable door-mount brackets (US Patent No. 8,388,076)



BLUM MOVENTO, 763 or 769 heavy-duty slides



BASE CABINET PULLOUT W/ KNIFE BLOCK

Store your kitchen knives, shears, meat thermometers, and more in style with the 448KBCC Craftsman Collection Knife Block Base Cabinet Pullout. Part of our Craftsman Collection, this pullout organizer combines timeless style and exceptional functionality.

The elegant design features curved black wire accents, solid wood construction and furniture-grade soft edges. The distinctive decorative details echo the graceful curves at the top of the pullout, creating a cohesive and sophisticated look.

Built for practicality and convenience, the 448KBCC includes up to two knife block inserts with flex rod technology to securely hold your knives, a removable wire utensil bin, and an antimicrobial dishwasher-safe cutting board.

Designed for 9" and 12" base cabinets, now offered in walnut or maple with concealed rear backstops that provide extra safety and stability, patented door-mount brackets (US Patent No. 8,388,076) and BLUM MOVENTO soft-close slides that provide smooth operation and easy installation.

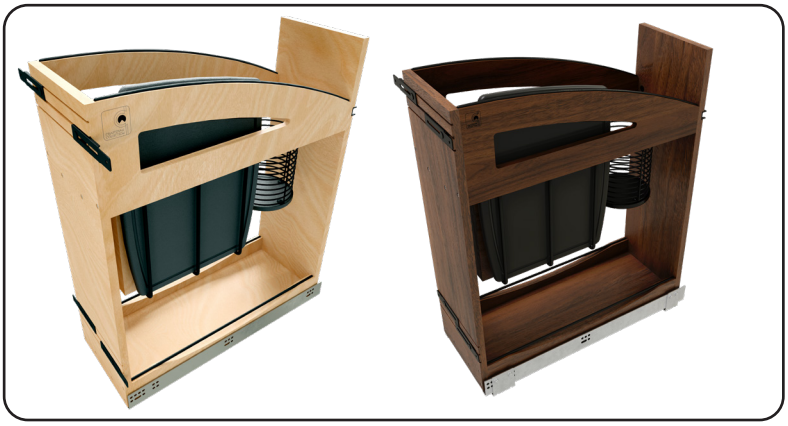

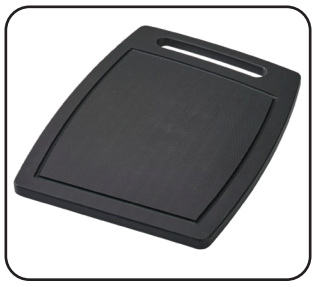

Dishwasher-safe cutting board included



(1) removable black wire utensil bin



Sculpted black wire accents

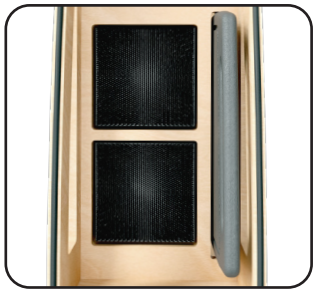

Flex rod knife holder

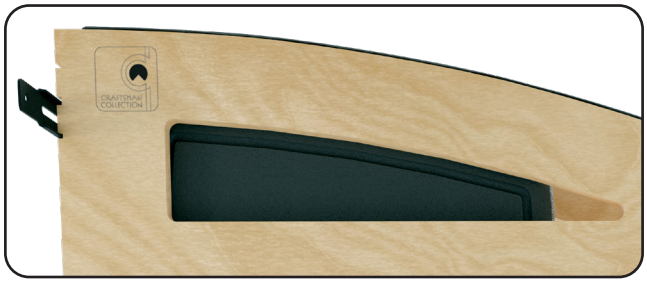

The curved lines of the cutting board enhance the pullout's soft contours



BASE CABINET PULLOUT W/ UTENSIL BINS

Introducing the walnut 448UTCC Craftsman Collection Utensil Base Cabinet Pullout - one of the exciting new launches for KBIS 2026 from Rev-A-Shelf®! Thoughtfully designed to complement the entire Craftsman Collection, this organizer blends timeless elegance with modern functionality.
Crafted from solid wood with soft, furniture-grade edges and accented by recessed black wire detailing, the 448UTCC brings understated sophistication to your kitchen.

Now available in walnut or maple and designed for 9" and 12" base cabinets, it features a fixed top shelf with up to four minimalist, open-wire bins, a sturdy bottom shelf, and BLUM MOVENTO soft-close slides for smooth and reliable operation. Concealed rear stops provide extra safety and stability and patented black door-mount brackets (US Patent No. 8,388,076) provide easy installation.



Furniture-grade soft edges



Up to (4) Removable black wire utensil bins

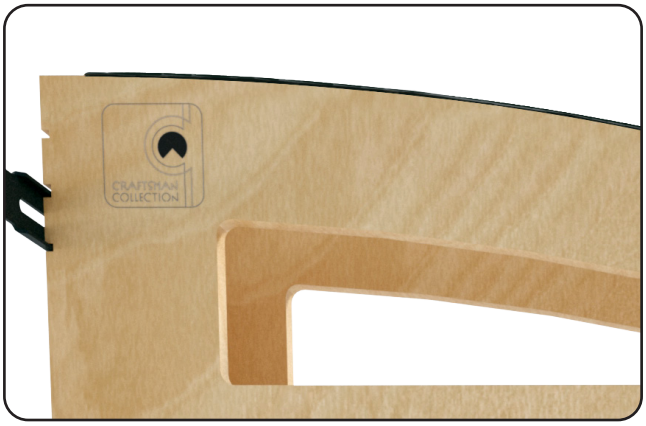

Graceful curves and sophisticated black accents seamlessly complement the entire collection





BASE CABINET PULLOUT W/ TRAY DIVIDER/ FOIL WRAP HOLDER

Every kitchen has a few items that can be a pain to keep organized; bakeware, cutting boards, trays and those long boxes of foil and plastic wrap are always near the top of that list! Rev-A-Shelf® is happy to solve another organization dilemma with the 447CC Craftsman Collection Base Cabinet Pullout with a Tray Divider and Foil Wrap Holder.

This sleek organizer is a part of our Craftsman Collection. Enjoy refined aesthetics with practicality, showcasing furniture-grade soft edges, solid wood construction, and recessed black wire accents that add a modern touch.

Built to last, the 447CC Series glides on BLUM MOVENTO soft-close slides.

Designed for 9" and 12" base cabinets, now offered in walnut or maple with patented door-mount brackets (US Patent No. 8,388,076), concealed rear stops that provide extra safety and stability, one fixed divider for bakeware and three removable, adjustable T-Bars for foil, plastic wrap, food storage bags and more.





Adjustable T-Bars for foil, plastic wrap and food storage bags, or remove them to store large items

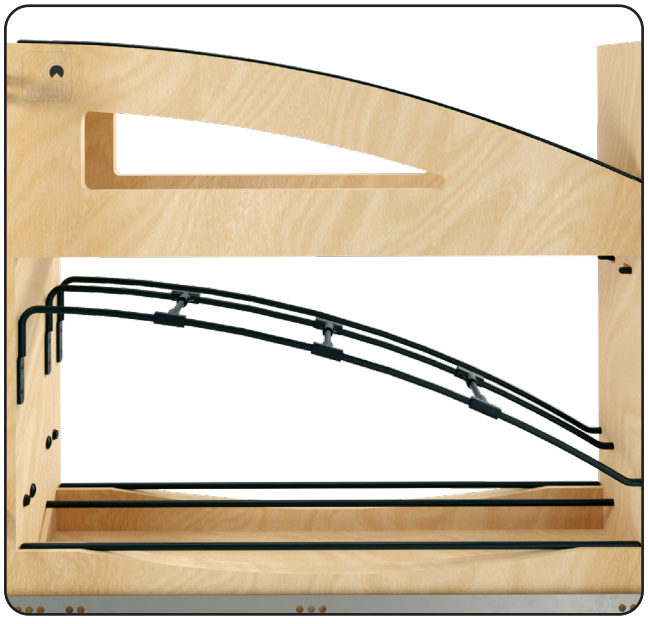

Sleek curved lines and bold black accents that blend effortlessly with the collection's refined aesthetic



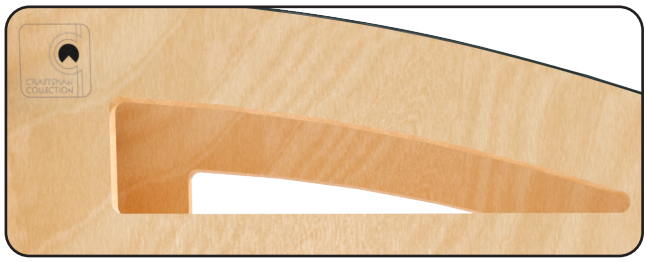

A distinctive cut-out design, smooth curved edges and bold black wire accents elevate both form and function



Adjustable middle shelf that discreetly conceals adjustment holes

Rev-A-Shelf® is excited to introduce the 448CC Series Base Cabinet Pullout, part of the elegant Craftsman Collection.

This pullout organizer combines refined aesthetics with practicality, showcasing furniture-grade soft edges, solid wood construction, and recessed black wire accents that add a modern touch.

Designed for 9" and 12" base cabinets and now offered in walnut or maple, the 448CC features a fixed top and bottom shelf, an adjustable middle shelf, and curved details that enhance both style and functionality.

BASE CABINET PULLOUT

Complete with BLUM MOVENTO soft-close slides and patented door-mount brackets (US Patent No. 8,388,076), this innovative pullout organizer brings timeless craftsmanship with a modern touch and easy organization to your kitchen.





BOTTOM MOUNT WASTE CONTAINER

Stash your trash in luxurious style with the 4WCCC Series Craftsman Collection Bottom Mount Waste Container from Rev-A-Shelf®! This one-of-a-kind pullout waste container features the same solid wood construction, recessed wire black accents, and a stunning design with furniture-grade soft edges that is cohesive throughout our entire Craftsman Collection.

Designed for 9" and 12" base cabinets, now offered in walnut or maple, with decorative radius on either side of the pullout holds the BPA-free black polypropylene waste containers securely in place. The black door-mount brackets are integrated into the frame, giving a clean visual appearance. This unit glides on BLUM MOVENTO soft-close slides for smooth operation.





Elegantly contoured wood silhouette



Double 50 qt. configuration shown



Single waste container option includes a rear storage area



Integrated black wire accents complement the decorative radius above with a seamless flow



Patented black adjustable door-mount brackets



"GIRASOLO" BLIND CORNER OPTIMIZER



Banded wood rim with recessed black wire accents

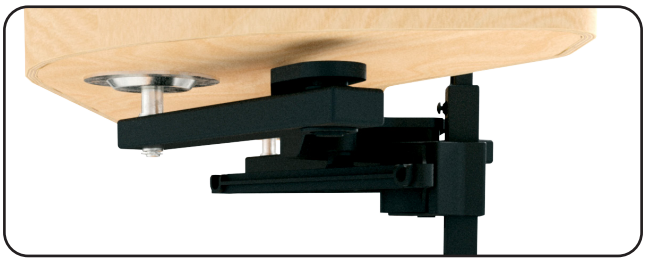

Black soft-close pivot hardware system



The scoop-out design in the wood rim allows the wire accent to function as a convenient handle

The 487CC Series Craftsman Collection "Girasolo" Blind Corner Optimizer by Rev-A-Shelf® brings a sophisticated upgrade to the classic Girasolo design. As part of the Craftsman Collection, this innovative blind corner solution combines curved lines with soft edges in its solid wood construction. Recessed matte black wire accents add a sleek, modern look to the organizers.

Thoughtfully designed with functionality and style in mind, the 487CC Series pulls directly out of the cabinet on a soft-close pivot hardware system, eliminating the need for adjacent appliance clearance. The elegant black wire accents double as a handle for effortless operation.

Now available in walnut or maple and designed for 12" and 15" and 18" blind corner cabinet openings, this organizer features two pullout trays. The trays glide smoothly, providing easy access to hard-to-reach blind corner cabinets. The adjustable shelving system further enhances the storage possibilities, making it the perfect solution for organizing while maintaining the seamless Craftsman Collection aesthetic.





ADJUSTABLE DEEP DRAWER DIVIDER

The 4WDIVCC Craftsman Collection Adjustable Deep Drawer Divider Inserts from Rev-A-Shelf® will bring organization without sacrificing style.

Designed for 24", 30" and 36" base cabinet drawers, these trimmable inserts feature solid wood construction and recessed black wire accents for a modern and refined appearance. The unique curved design seamlessly complements the rest of the Craftsman Collection while adding both visual interest and effortless access to the contents of the drawer.

The 4WDIVCC Series is available in walnut or maple and installs in seconds with just four screws. Includes a removable black non-skid vinyl mat and four, five or six removable, adjustable dividers that can be positioned either at an angle or vertically, allowing you to create a truly customized organization solution.



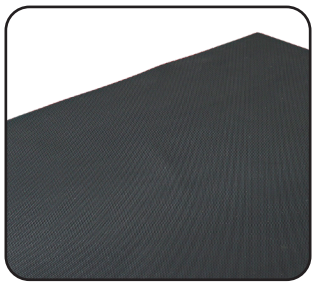

Black non-skid mat included



Curved divider profile with black accents



Features up to six adjustable, removable dividers that can be positioned vertically or at an angle for customized organization, along with up to (30) dowel pins for easy adjustments



Optimize your vertical drawer space by angling the dividers, creating the perfect solution for storing taller items



RIGHT-FIT CUTLERY TRAY INSERT

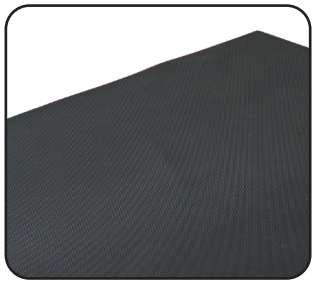

Black non-skid mat included

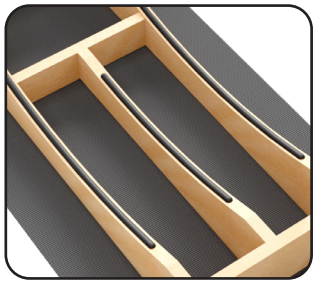

15" version shown

Luxury isn't just about looks - it's about smart design. Upgrade your kitchen drawers with the 4WCTCC Series Craftsman Collection Right-Fit Cutlery Tray Inserts! These beautiful drawer inserts feature solid wood construction and recessed black wire accents for a stylish look that you won't find anywhere else on the market.

Now available in walnut or maple and designed for 5/8" thick drawer boxes in 15", 18", 21" and 24" widths with a 1-1/2" face frame, these drop-in inserts install in seconds with no tools or trimming required. The unique curved design provides both visual interest and even easier access to the contents of the drawer. Includes a removable black non-skid vinyl mat.

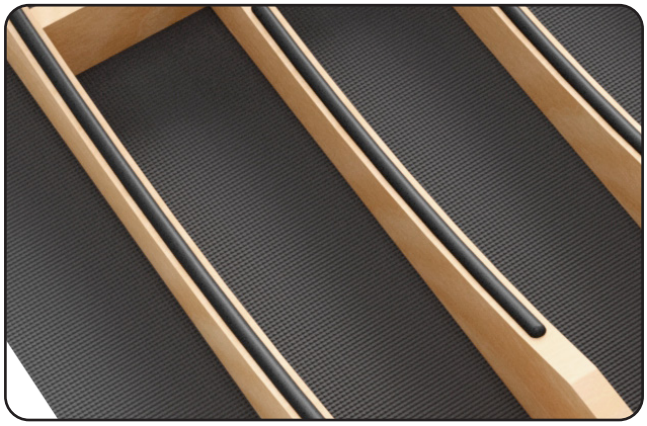

Soft edges and black accents complement other Craftsman Collection products

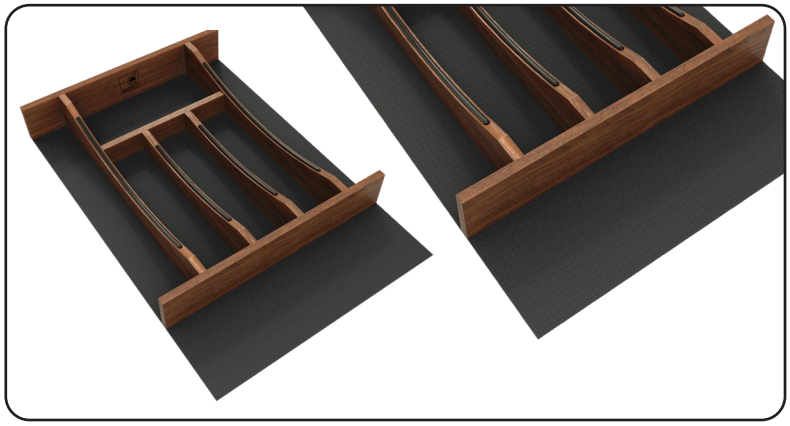



RIGHT-FIT UTENSIL TRAY INSERT

Luxury isn't just about looks - it's about smart design. Upgrade your kitchen drawers with the 4WUTCC Series Craftsman Collection Right-Fit Utensil Tray Inserts! These beautiful drawer inserts feature solid wood construction and recessed black wire accents for a stylish look that you won't find anywhere else on the market.

Designed for 5/8" thick drawer boxes in 15", 18", 21" and 24" widths with a 1-1/2" face frame, now offered in walnut or maple, these drop-in inserts install in seconds with no tools or trimming required. The unique curved design provides both visual interest and even easier access to the contents of the drawer. Includes a removable black non-skid vinyl mat.

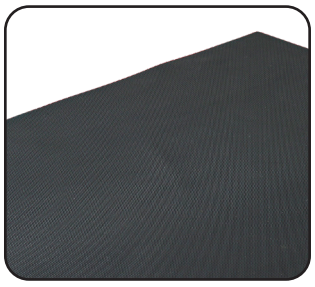

Black non-skid mat included

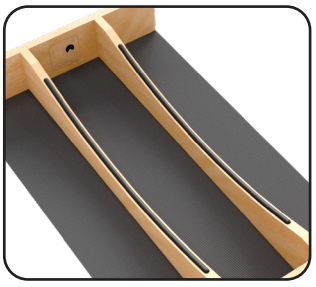

15" version shown

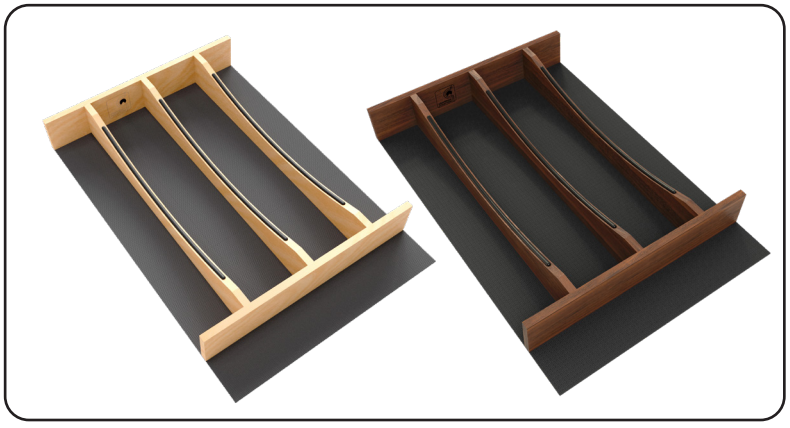

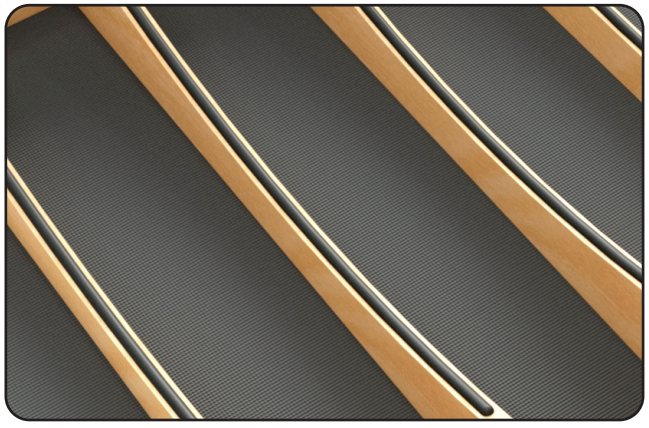

Soft edges and black accents complement other Craftsman Collection products







Banded wood rim



Unique scoop-out design that allows the wire accent to function as a handle

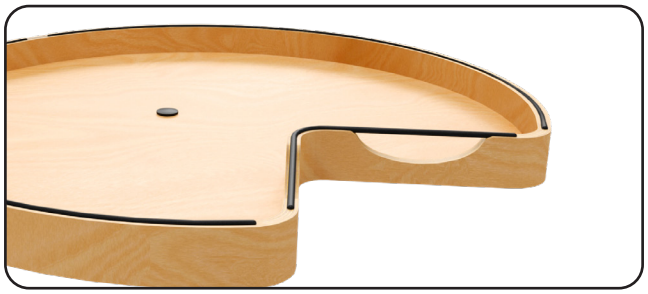

Recessed black wire accents

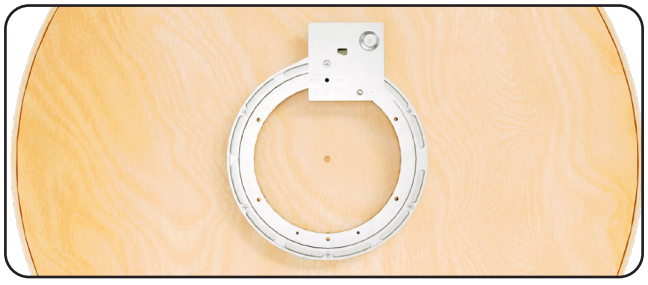

Tray swivels on an aluminum bearing

KIDNEY-SHAPED LAZY SUSAN

Rev-A-Shelf® is putting a new "spin" on cabinet organization Craftsman Collection Kidney Shaped Lazy Susan. This product line features stunning lines, visual lightness, solid wood construction, and stylish embedded black wire accents for a distinctive look that sets it apart from anything else on the market.

The 4CC-401 Series is available in 28" and 32" sizes and now offered in walnut or maple. Designed for corner base cabinets, these single-shelf units include an aluminum bearing. The distinctive curved design in the front of the unit allows the black wire accent to double as a handle for easy operation.

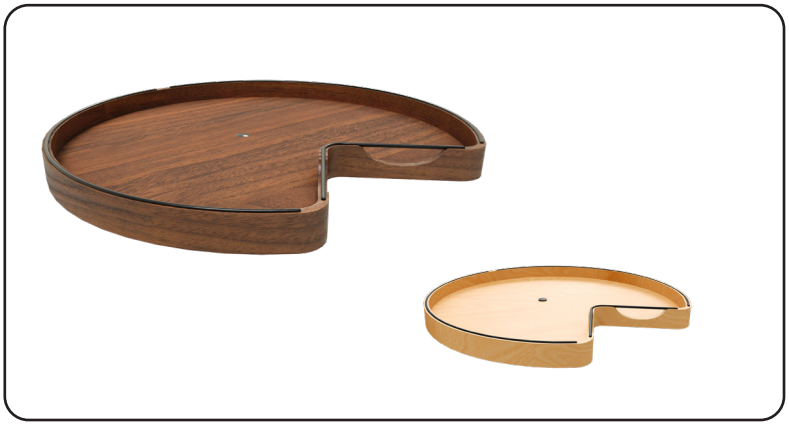



MAPLE BASE CABINET PULLOUT W/ KNIFE BLOCK

Craftsman Collection - Maple Base Cabinet Knife Block Pullout Organizer w/ BLUM Soft-Close					
PRODUCT	**DESCRIPTION**	**DIMS**	**MCO**	**CAB**	**SLP**
448KBCC-BCSC-5MB	5" Base Organizer w/ (1) 1 qt. Bin	5-15/16" (151 mm) W x 21-21/32" (550 mm) D x 25-5/8" (651 mm) H	5-1/4" (133 mm)	FHB9	$677.99
448KBCC-BCSC-8MB	8" Base Organizer w/ (1) 2 qt. Bin	8-15/16" (228 mm) W x 21-21/32" (550 mm) D x 25-5/8" (651 mm) H	8-1/2" (216 mm)	FHB12	$825.99

WALNUT BASE CABINET PULLOUT W/ KNIFE BLOCK

Craftsman Collection - Walnut Base Cabinet Knife Block Pullout Organizer w/ BLUM Soft-Close					
PRODUCT	**DESCRIPTION**	**DIMS**	**MCO**	**CAB**	**SLP**
448KBCC-BCSC-WN-5MB	5" Base Organizer w/ (1) 1 qt. Bin	5-15/16" (151 mm) W x 21-21/32" (550 mm) D x 25-5/8" (651 mm) H	5-1/4" (133 mm)	FHB9	$1,323.99
448KBCC-BCSC-WN-8MB	8" Base Organizer w/ (1) 2 qt. Bin	8-15/16" (228 mm) W x 21-21/32" (550 mm) D x 25-5/8" (651 mm) H	8-1/2" (216 mm)	FHB12	$1,602.99

MAPLE BASE CABINET PULLOUT W/ UTENSIL BINS

Craftsman Collection - Maple Base Cabinet Utensil Pullout Organizer w/ BLUM Soft-Close					
PRODUCT	**DESCRIPTION**	**DIMS**	**MCO**	**CAB**	**SLP**
448UTCC-BCSC-5MB	5" Base Organizer w/ (4) 1 qt. Bins	5-15/16" (151 mm) W x 21-21/32" (550 mm) D x 25-5/8" (651 mm) H	5-1/4" (133 mm)	FHB9	$516.99
448UTCC-BCSC-8MB	8" Base Organizer w/ (4) 2 qt. Bins	8-15/16" (228 mm) W x 21-21/32" (550 mm) D x 25-5/8" (651 mm) H	8-1/2" (216 mm)	FHB12	$634.99

WALNUT BASE CABINET PULLOUT W/ UTENSIL BINS

Craftsman Collection - Walnut Base Cabinet Utensil Pullout Organizer w/ BLUM Soft-Close					
PRODUCT	**DESCRIPTION**	**DIMS**	**MCO**	**CAB**	**SLP**
448UTCC-BCSC-WN-5MB	5" Base Organizer w/ (4) 1 qt. Bins	5-15/16" (151 mm) W x 21-21/32" (550 mm) D x 25-5/8" (651 mm) H	5-1/4" (133 mm)	FHB9	$1,014.99
448UTCC-BCSC-WN-8MB	8" Base Organizer w/ (4) 2 qt. Bins	8-15/16" (228 mm) W x 21-21/32" (550 mm) D x 25-5/8" (651 mm) H	8-1/2" (216 mm)	FHB12	$1,185.99

MAPLE BAKEWARE PULLOUT ORGANIZER

Craftsman Collection - Maple Bakeware Pullout Organizer w/ BLUM Soft-Close					
PRODUCT	**DESCRIPTION**	**DIMS**	**MCO**	**CAB**	**SLP**
447CC-BCSC-5MB	5" Bakeware Organizer	5-15/16" (151 mm) W x 21-21/32" (550 mm) D x 19-5/8" (499 mm) H	5-1/4" (133 mm)	B9	$457.99
447CC-BCSC-8MB	8" Bakeware Organizer	8-15/16" (228 mm) W x 21-21/32" (551 mm) D x 19-5/8" (499 mm) H	8-1/2" (216 mm)	B12	$501.99

WALNUT BAKEWARE PULLOUT ORGANIZER

Craftsman Collection - Walnut Bakeware Pullout Organizer w/ BLUM Soft-Close					
PRODUCT	**DESCRIPTION**	**DIMS**	**MCO**	**CAB**	**SLP**
447CC-BCSC-WN-5MB	5″ Bakeware Organizer	5-15/16" (151 mm) W x 21-21/32" (550 mm) D x 19-5/8" (499 mm) H	5-1/4″ (133 mm)	B9	$780.99
447CC-BCSC-WN-8MB	8″ Bakeware Organizer	8-15/16" (228 mm) W x 21-21/32" (551 mm) D x 19-5/8" (499 mm) H	8-1/2″ (216 mm)	B12	$874.99

MAPLE BASE CABINET PULLOUT

Craftsman Collection - Maple Base Cabinet Pullout Organizer w/ BLUM Soft-Close					
PRODUCT	**DESCRIPTION**	**DIMS**	**MCO**	**CAB**	**SLP**
448CC-BCSC-5MB	5" Base Organizer	5-15/16″ (151 mm) W x 21-21/32" (550 mm) D x 25-5/8″ (651 mm) H	5-1/4″ (133 mm)	FHB9	$471.99
448CC-BCSC-8MB	8" Base Organizer	8-15/16″ (228 mm) W x 21-21/32" (550 mm) D x 25-5/8" (651 mm) H	8-1/2″ (216 mm)	FHB12	$515.99

WALNUT BASE CABINET PULLOUT

Craftsman Collection - Walnut Base Cabinet Pullout Organizer w/ BLUM Soft-Close					
PRODUCT	**DESCRIPTION**	**DIMS**	**MCO**	**CAB**	**SLP**
448CC-BCSC-WN-5MB	5" Base Organizer	5-15/16″ (151 mm) W x 21-21/32" (550 mm) D x 25-5/8″ (651 mm) H	5-1/4″ (133 mm)	FHB9	$1,053.99
448CC-BCSC-WN-8MB	8" Base Organizer	8-15/16″ (228 mm) W x 21-21/32" (550 mm) D x 25-5/8" (651 mm) H	8-1/2″ (216 mm)	FHB12	$1,217.99

MAPLE BOTTOM-MOUNT WASTE CONTAINER

Craftsman Collection - Maple Bottom Mount Pullout Waste Container w/ BLUM Soft-Close					
PRODUCT	**DESCRIPTION**	**DIMS**	**MCO**	**CAB**	**SLP**
4WCCC-1535DM-118MB	Single 35 qt.	12" (305 mm) W x 22-3/32" (562 mm) D x 20-11/32" (517 mm) H	12″ (305 mm)	B15	$536.99
4WCCC-1550DM-118MB	Single 50 qt.	12" (305 mm) W x 22-3/32" (562 mm) D x 24-1/4" (616 mm) H	12″ (305 mm)	FHB15	$551.99
4WCCC-1835DM-218MB	Double 35 qt.	15" (381 mm) W x 22-3/32" (562 mm) D x 20-11/32" (517 mm) H	15″ (381 mm)	B18	$586.99
4WCCC-1850DM-218MB	Double 50 qt.	15″ (381 mm) W x 22-3/32″ (562 mm) D x 24-1/4″ (616 mm) H	15″ (381 mm)	FHB18	$604.65
4WCCC-2432DM-418MB	Double 32 qt.	20-31/32" (533 mm) W x 22-3/32" (562 mm) D x 20-9/32" (516 mm) H	21″ (533 mm)	B24	$675.99

WALNUT BOTTOM-MOUNT WASTE CONTAINER

Craftsman Collection - Walnut Bottom Mount Pullout Waste Container w/ BLUM Soft-Close					
PRODUCT	**DESCRIPTION**	**DIMS**	**MCO**	**CAB**	**SLP**
4WCCC-WN-1535DM-118MB	Single 35 qt.	12" (305 mm) W x 22-3/32" (562 mm) D x 20-11/32" (517 mm) H	12″ (305 mm)	B15	$1,006.99
4WCCC-WN-1550DM-118MB	Single 50 qt.	12" (305 mm) W x 22-3/32" (562 mm) D x 24-1/4" (616 mm) H	12″ (305 mm)	FHB15	$1,041.99
4WCCC-WN-1835DM-218MB	Double 35 qt.	15" (381 mm) W x 22-3/32" (562 mm) D x 20-11/32" (517 mm) H	15″ (381 mm)	B18	$1,065.99
4WCCC-WN-1850DM-218MB	Double 50 qt.	15″ (381 mm) W x 22-3/32″ (562 mm) D x 24-1/4″ (616 mm) H	15″ (381 mm)	FHB18	$1,079.99
4WCCC-WN-2432DM-418MB	Double 32 qt.	20-31/32" (533 mm) W x 22-3/32" (562 mm) D x 20-9/32" (516 mm) H	21″ (533 mm)	B24	$1,209.99

MAPLE "GIRASOLO" BLIND CORNER OPTIMIZER

Single-Tier Craftsman Collection - Maple "Girasolo" Blind Corner Optimizer					
PRODUCT	**DESCRIPTION**	**DIMS**	**MCO**	**CAB**	**SLP**
4871CC-12-*MB	Single for 12" Cabinet Opening	33-1/16" (840 mm) W x 14-19/32" (371 mm) D x 24-13/32" (621 mm) H	12" (305 mm)	BC42	$458.95
4871CC-15-*MB	Single for 15" Cabinet Opening	35-13/16" (910 mm) W x 16-5/8" (422 mm) D x 24-13/32" (621 mm) H	15" (381 mm)	BC45	$465.90
4871CC-18-*MB	Single for 18" Cabinet Opening	37-31/32" (965 mm) W x 18-1/32" (459 mm) D x 24-13/32" (621 mm) H	18" (457 mm)	BC48	$476.90
Two-Tier Craftsman Collection - Maple "Girasolo" Blind Corner Optimizer					
487CC-12-*MB	Two-Tier for 12" Cabinet Opening	32-1/16" (815 mm) W x 14-19/32" (371 mm) D x 24-13/32" (621 mm) H	12" (305 mm)	BC42	$810.99
487CC-15-*MB	Two-Tier for 15" Cabinet Opening	35-13/16" (910 mm) W x 16-5/8" (422 mm) D x 24-13/32" (621 mm) H	15" (381 mm)	BC45	$854.99
487CC-18-*MB	Two-Tier for 18" Cabinet Opening	37-31/32" (965 mm) W x 18-1/32" (459 mm) D x 24-13/32" (621 mm) H	18" (457 mm)	BC48	$881.99

** Insert L for Left Opening/Blind Right Cabinets or R for Right Opening/Blind Left Cabinets*

WALNUT "GIRASOLO" BLIND CORNER OPTIMIZER

Single-Tier Craftsman Collection - Walnut "Girasolo" Blind Corner Optimizer					
PRODUCT	**DESCRIPTION**	**DIMS**	**MCO**	**CAB**	**SLP**
4871CC-WN-12-*MB	Single for 12" Cabinet Opening	33-1/16" (840 mm) W x 14-19/32" (371 mm) D x 24-13/32" (621 mm) H	12" (305 mm)	BC42	$815.99
4871CC-WN-15-*MB	Single for 15" Cabinet Opening	35-13/16" (910 mm) W x 16-5/8" (422 mm) D x 24-13/32" (621 mm) H	15" (381 mm)	BC45	$868.99
4871CC-WN-18-*MB	Single for 18" Cabinet Opening	37-31/32" (965 mm) W x 18-1/32" (459 mm) D x 24-13/32" (621 mm) H	18" (457 mm)	BC48	$876.99
Two-Tier Craftsman Collection - Walnut "Girasolo" Blind Corner Optimizer					
487CC-WN-12-*MB	Two-Tier for 12" Cabinet Opening	32-1/16" (815 mm) W x 14-19/32" (371 mm) D x 24-13/32" (621 mm) H	12" (305 mm)	BC42	$1,515.99
487CC-WN-15-*MB	Two-Tier for 15" Cabinet Opening	35-13/16" (910 mm) W x 16-5/8" (422 mm) D x 24-13/32" (621 mm) H	15" (381 mm)	BC45	$1,600.99
487CC-WN-18-*MB	Two-Tier for 18" Cabinet Opening	37-31/32" (965 mm) W x 18-1/32" (459 mm) D x 24-13/32" (621 mm) H	18" (457 mm)	BC48	$1,618.99

** Insert L for Left Opening/Blind Right Cabinets or R for Right Opening/Blind Left Cabinets*

MAPLE ADJUSTABLE DEEP DRAWER DIVIDER INSERT

Craftsman Collection - Maple Adjustable Deep Drawer Divider Insert				
PRODUCT	**DESCRIPTION**	**DIMS**	**CAB**	**SLP**
4WDIVCC-24MB-1	24" Deep Drawer Divider	19-1/4" (489 mm) W x 19-13/16" (503 mm) D x 5-31/32" (152 mm) H	DB24	$207.99
4WDIVCC-30MB-1	30" Deep Drawer Divider	25-1/4" (642 mm) W x 19-13/16" (503 mm) D x 5-31/32" (152 mm) H	DB30	$266.99
4WDIVCC-36MB-1	36" Deep Drawer Divider	31-7/32" (793 mm) W x 19-13/16" (503 mm) D x 5-31/32" (152 mm) H	DB36	$281.99

WALNUT ADJUSTABLE DEEP DRAWER DIVIDER INSERT

Craftsman Collection - Walnut Adjustable Deep Drawer Divider Insert				
PRODUCT	**DESCRIPTION**	**DIMS**	**CAB**	**SLP**
4WDIVCC-WN-24MB-1	24" Deep Drawer Divider	19-1/4" (489 mm) W x 19-13/16" (503 mm) D x 5-31/32" (152 mm) H	DB24	$481.99
4WDIVCC-WN-30MB-1	30" Deep Drawer Divider	25-1/4" (642 mm) W x 19-13/16" (503 mm) D x 5-31/32" (152 mm) H	DB30	$603.99
4WDIVCC-WN-36MB-1	36" Deep Drawer Divider	31-7/32" (793 mm) W x 19-13/16" (503 mm) D x 5-31/32" (152 mm) H	DB36	$723.99

MAPLE KIDNEY-SHAPED LAZY SUSAN

Craftsman Collection - Maple Kidney-Shaped Lazy Susan w/ Swivel Bearing				
PRODUCT	**DESCRIPTION**	**DIMS**	**CAB**	**SLP**
4CC-401-28BS-1MB	28" Single Shelf	28" (712 mm) W x 26" (661 mm) D x 2-7/8" (73 mm) H	LCB33	$265.99
4CC-401-32BS-1MB	32" Single Shelf	32" (813 mm) W x 29-7/16" (749 mm) D x 2-7/8" (74 mm) H	LCB36	$286.99

WALNUT KIDNEY-SHAPED LAZY SUSAN

Craftsman Collection - Walnut Kidney-Shaped Lazy Susan w/ Swivel Bearing				
PRODUCT	**DESCRIPTION**	**DIMS**	**CAB**	**SLP**
4CC-401-WN-28BS-1MB	28" Single Shelf	28" (712 mm) W x 26" (661 mm) D x 2-7/8" (73 mm) H	LCB33	$426.99
4CC-401-WN-32BS-1MB	32" Single Shelf	32" (813 mm) W x 29-7/16" (749 mm) D x 2-7/8" (74 mm) H	LCB36	$516.99

MAPLE CUTLERY DRAWER INSERT

Craftsman Collection - Right-Fit Maple Cutlery Drawer Insert				
PRODUCT	**DESCRIPTION**	**DIMS**	**CAB**	**SLP**
4WCTCC-15MB-1	Cutlery Drawer Insert	10-1/4" (261 mm) W x 19-1/2" (496 mm) D x 2-11/32" (60 mm) H	B15	$103.99
4WCTCC-18MB-1	Cutlery Drawer Insert	13-7/32" (337 mm) W x 19-1/2" (496 mm) D x 2-11/32" (60 mm) H	B18	$112.99
4WCTCC-21MB-1	Cutlery Drawer Insert	16-7/32" (412 mm) W x 19-1/2" (496 mm) D x 2-11/32" (60 mm) H	B21	$136.99
4WCTCC-24MB-1	Cutlery Drawer Insert	19-1/4" (489 mm) W x 19-1/2" (496 mm) D x 2-11/32" (60 mm) H	B24	$157.99

WALNUT CUTLERY DRAWER INSERT

Craftsman Collection - Right-Fit Walnut Cutlery Drawer Insert				
PRODUCT	**DESCRIPTION**	**DIMS**	**CAB**	**SLP**
4WCTCC-WN-15MB-1	Cutlery Drawer Insert	10-1/4" (261 mm) W x 19-1/2" (496 mm) D x 2-11/32" (60 mm) H	B15	$162.99
4WCTCC-WN-18MB-1	Cutlery Drawer Insert	13-7/32" (337 mm) W x 19-1/2" (496 mm) D x 2-11/32" (60 mm) H	B18	$192.99
4WCTCC-WN-21MB-1	Cutlery Drawer Insert	16-7/32" (412 mm) W x 19-1/2" (496 mm) D x 2-11/32" (60 mm) H	B21	$225.99
4WCTCC-WN-24MB-1	Cutlery Drawer Insert	19-1/4" (489 mm) W x 19-1/2" (496 mm) D x 2-11/32" (60 mm) H	B24	$257.99

MAPLE UTENSIL DRAWER INSERT

Craftsman Collection - Right-Fit Maple Utensil Drawer Insert				
PRODUCT	**DESCRIPTION**	**DIMS**	**CAB**	**SLP**
4WUTCC-15MB-1	Utensil Drawer Insert	10-1/4" (261 mm) W x 19-1/2" (496 mm) D x 2-11/32" (60 mm) H	B15	$94.99
4WUTCC-18MB-1	Utensil Drawer Insert	13-7/32" (337 mm) W x 19-1/2" (496 mm) D x 2-11/32" (60 mm) H	B18	$108.99
4WUTCC-21MB-1	Utensil Drawer Insert	16-7/32" (412 mm) W x 19-1/2" (496 mm) D x 2-11/32" (60 mm) H	B21	$135.99
4WUTCC-24MB-1	Utensil Drawer Insert	19-1/4" (489 mm) W x 19-1/2" (496 mm) D x 2-11/32" (60 mm) H	B24	$142.99

WALNUT UTENSIL DRAWER INSERT

Craftsman Collection - Right-Fit Walnut Utensil Drawer Insert				
PRODUCT	**DESCRIPTION**	**DIMS**	**CAB**	**SLP**
4WUTCC-WN-15MB-1	Utensil Drawer Insert	10-1/4" (261 mm) W x 19-1/2" (496 mm) D x 2-11/32" (60 mm) H	B15	$145.99
4WUTCCWN--18MB-1	Utensil Drawer Insert	13-7/32" (337 mm) W x 19-1/2" (496 mm) D x 2-11/32" (60 mm) H	B18	$180.99
4WUTCC-WN-21MB-1	Utensil Drawer Insert	16-7/32" (412 mm) W x 19-1/2" (496 mm) D x 2-11/32" (60 mm) H	B21	$217.99
4WUTCC-WN-24MB-1	Utensil Drawer Insert	19-1/4" (489 mm) W x 19-1/2" (496 mm) D x 2-11/32" (60 mm) H	B24	$235.99

LUXURY REDEFINED!



Every piece of clothing and accessory has a dedicated home.

This is the original concept behind the EDGE collection, envisioned to transform your wardrobe into a flexible, well-accessorized space that blends functionality and design. It meets every need and desire, providing an ideal spot for everything from dresses and skirts to trousers, shoes, jewelry, belts, bags, and glasses. Each item has its easily-accessible place, so nothing gets lost. With elegant rods, spacious compartments, and drawers, the collection features smart kits that are fully removable and customizable. This setup optimizes space and offers almost infinite assembly versatility, where freedom and order enhance each other, revealing true beauty.



Luxurious, practical, and contemporary, the EDGE collection stands out for its modularity. Its minimal and telescopic elements adapt to any space, catering to those who seek functionality and usability without compromising on style. Designed for organization and storage, this collection features removable, cushioned drawers as well as trouser racks, skirt racks, shoe racks, and laundry racks, seamlessly blending technology and elegance. Rubber profiles on the frames and rods, along with special tray materials, reduce noise and protect garments and accessories. The semi-glossy, warm grey metal construction found in all elements of the collection adds an extra touch of charm, capturing light in soft gleams. This enhances the cozy and warm style of the collection, creating evocative geometries that envelop clothes and accessories in an endless aesthetic harmony.

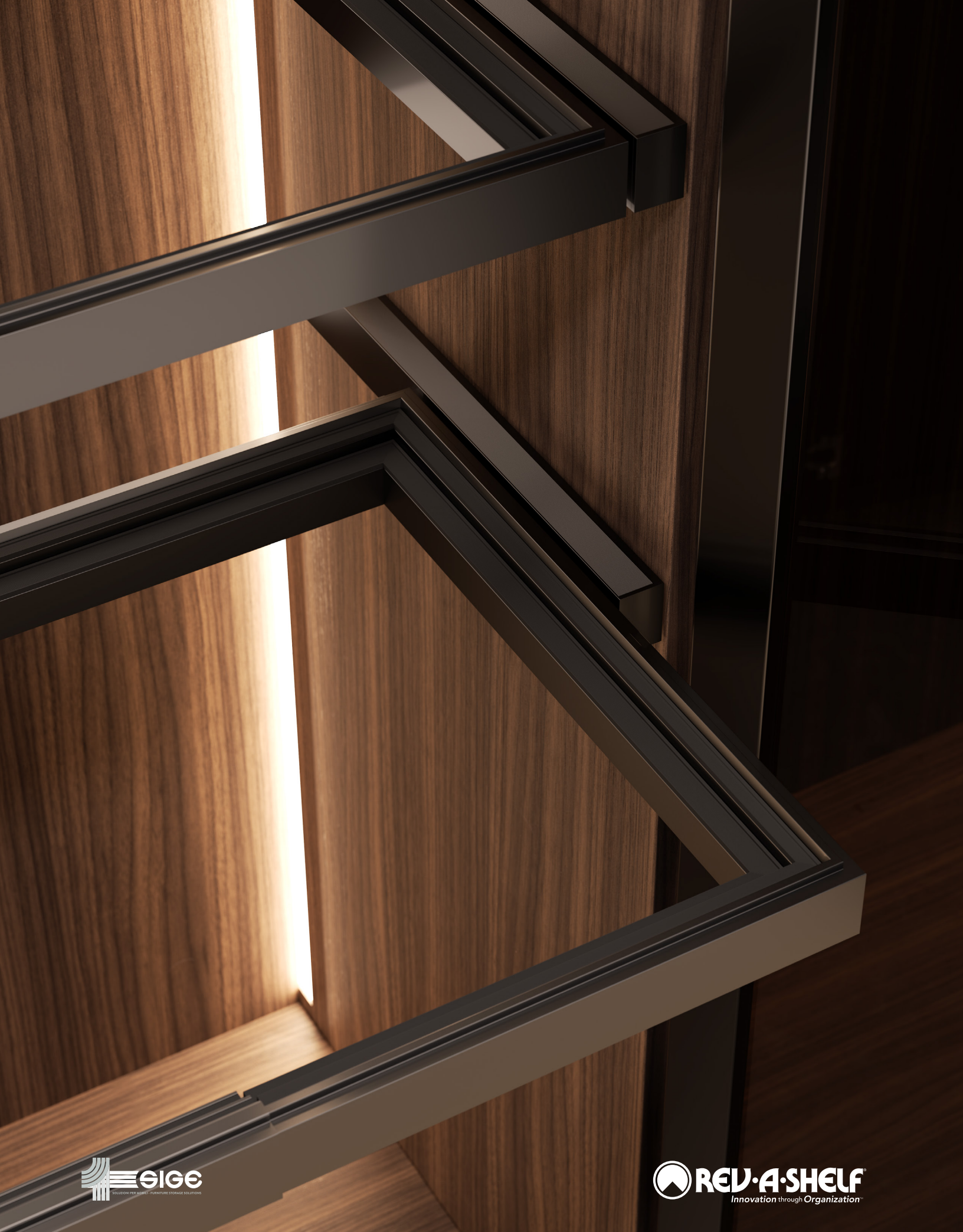
GIGE
SOLUZIONI PER MOBILI - FURNITURE STORAGE SOLUTIONS
REV-A-SHELF
Innovation through Organization

FRAMES

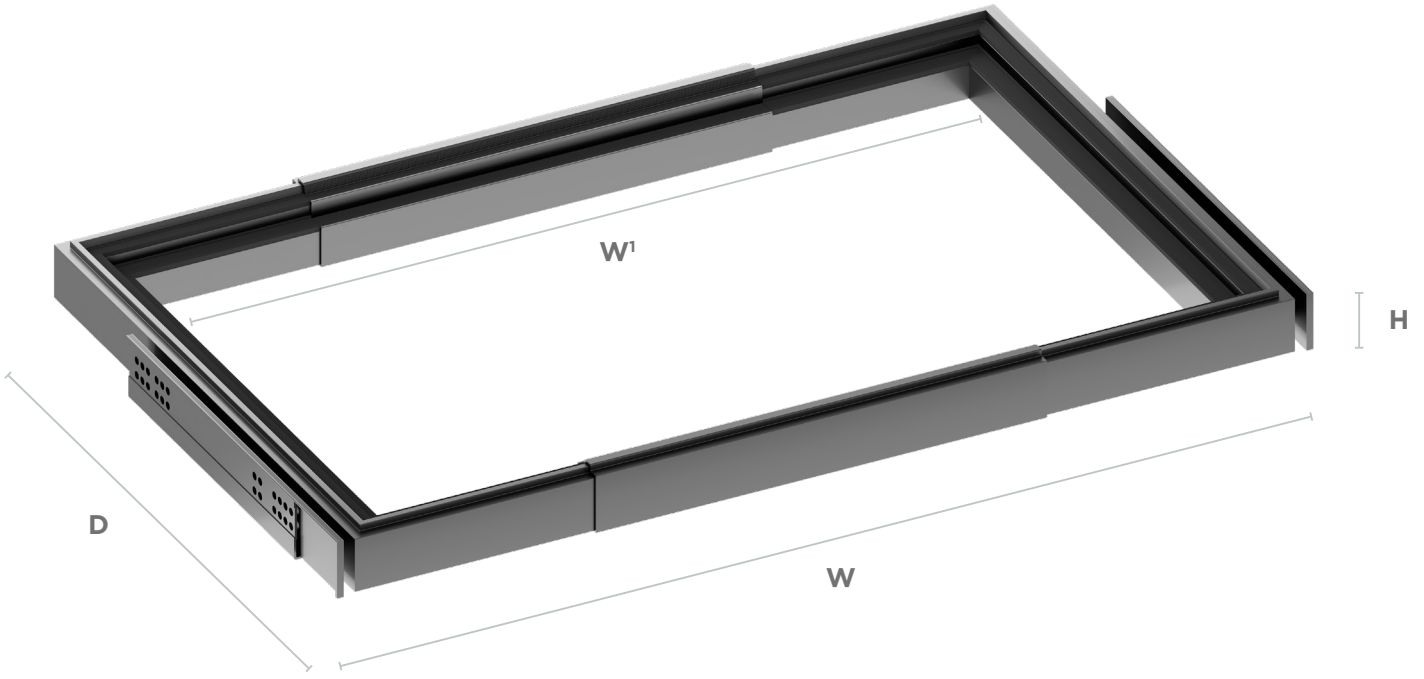

ADJUSTABLE EXTRACTABLE “EDGE” FRAME

- Two frame systems designed for 16” or 20” depths
- Adjustable frame features over 10-1/2” of width adjustment
- Suitable for open closets
- Optional spacer for use with sliding or hinged doors
- Made of powder-coated aluminum
- Sige full-extension soft-close slides

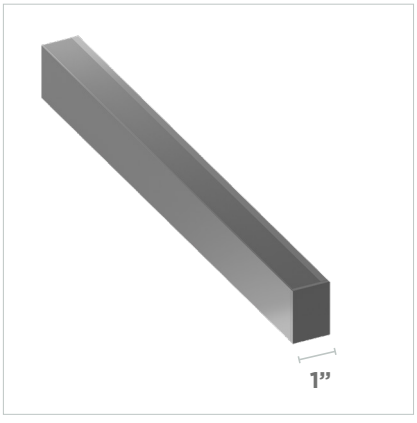

Optional: Spacer (5EW100-16-1)

Info

Frame	W*	W¹	D	H
5E100-2030-16-1	19-3/4” - 30-1/2”	16” - 26-7/8”	15-1/4”	2-7/8”
5E100-3242-16-1	31-1/2” - 42-1/4”	28” - 38-5/8”	15-1/4”	2-7/8”
5E100-2030-20-1	19-3/4” - 30-1/2”	16” - 26-7/8”	18-1/4”	2-7/8”
5E100-3242-20-1	31-1/2” - 42-1/4”	28” - 38-5/8”	18-1/4”	2-7/8”

Spacer	W	D	H
5EW100-16-1	1-3/16”	14-5/8”	1-7/8”

* Fits the stated interior width ranges



SIGE
SOLUZIONI PER MOBILI - FURNITURE STORAGE SOLUTIONS

REV-A-SHELF
Innovation through Organization

SHALLOW DRAWER FOR “EDGE” FRAME

- 5” tall drawers drop into EDGE frames
- Adjustable design features over 10-1/2” of width adjustment
- Made of powder-coated steel
- Optional non-slip mat (see page 46)

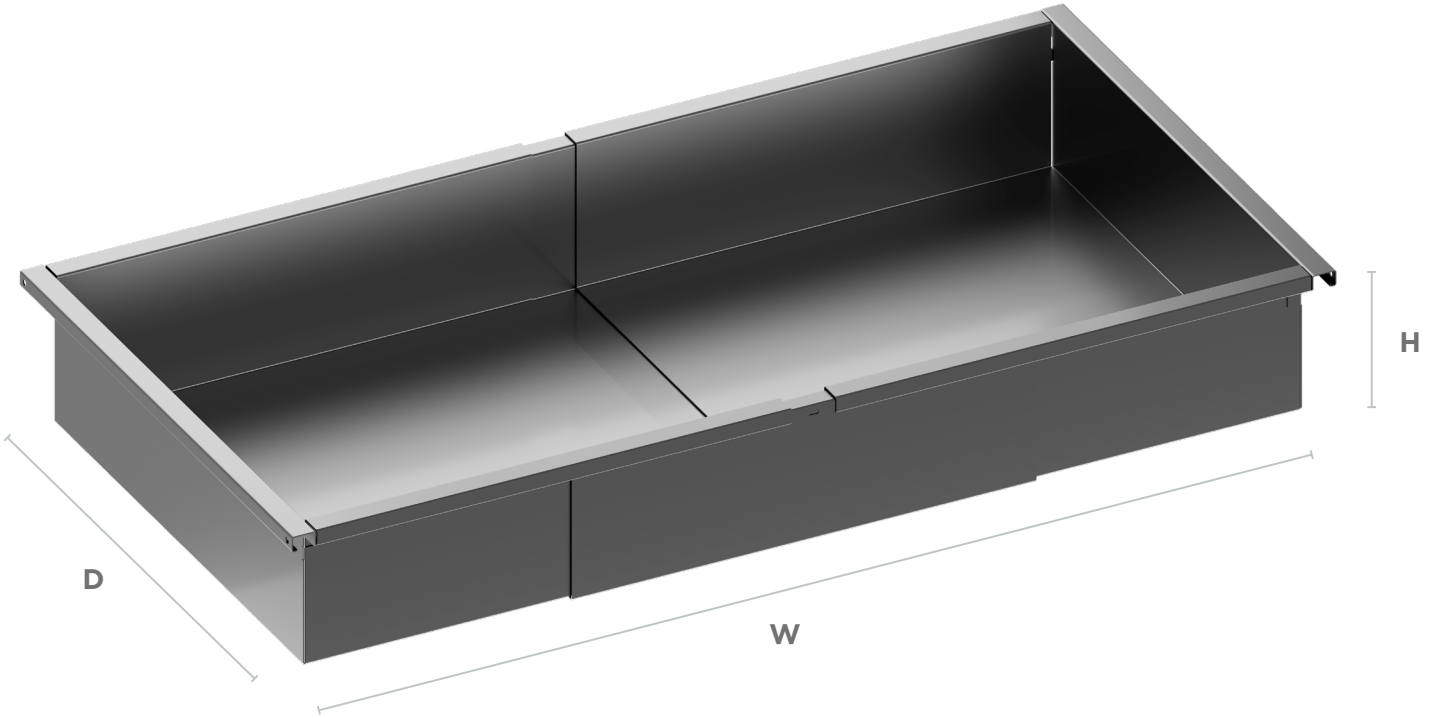

Info

	Fits Frame	W	D	H
5E220-2030-16-5-1	5E100-2030-16-1	16” - 26-7/8”	12-1/8”	5”
5E220-3242-16-5-1	5E100-3242-16-1	28” - 38-5/8”	12-1/8”	5”
5E220-2030-20-5-1	5E100-2030-20-1	16” - 26-7/8”	15-1/4”	5”
5E220-3242-20-5-1	5E100-3242-20-1	28” - 38-5/8”	15-1/4”	5”


SIGE
SOLUZIONI PER MOBILI - FURNITURE STORAGE SOLUTIONS
REV-A-SHELF
Innovation through Organization

DEEP DRAWER FOR “EDGE” FRAME

- 9-3/4” tall drawers drop into EDGE frames
- Adjustable design features over 10-1/2” of width adjustment
- Made of powder-coated steel
- Optional non-slip mat (see page 46)

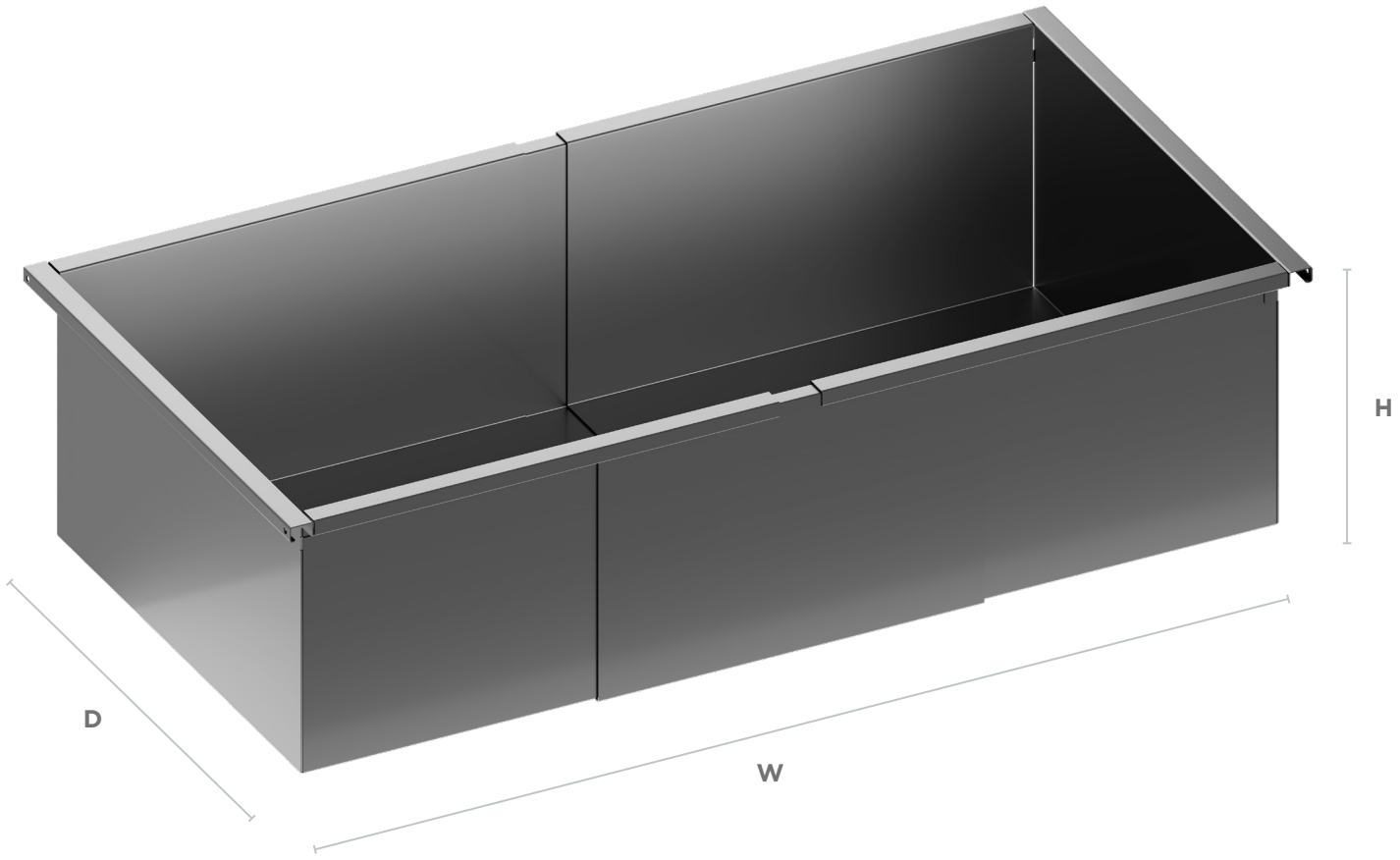

Info

	Fits Frame	W	D	H
5E220-2030-16-10-1	5E100-2030-16-1	16” - 26-7/8”	12-1/8”	10”
5E220-3242-16-10-1	5E100-3242-16-1	28” - 38-5/8”	12-1/8”	10”
5E220-2030-20-10-1	5E100-2030-20-1	16” - 26-7/8”	15-1/4”	10”
5E220-3242-20-10-1	5E100-3242-20-1	28” - 38-5/8”	15-1/4”	10”


SIGE
SOLUZIONI PER MOBILI - FURNITURE STORAGE SOLUTIONS
REV-A-SHELF
Innovation through Organization

ADJUSTABLE STORAGE TRAY

- 4-1/8” tall storage tray drops into EDGE frames
- Made of powder-coated steel
- Adjustable design features 2-3/8” of width adjustment
- Optional non-slip mat (see page 46)

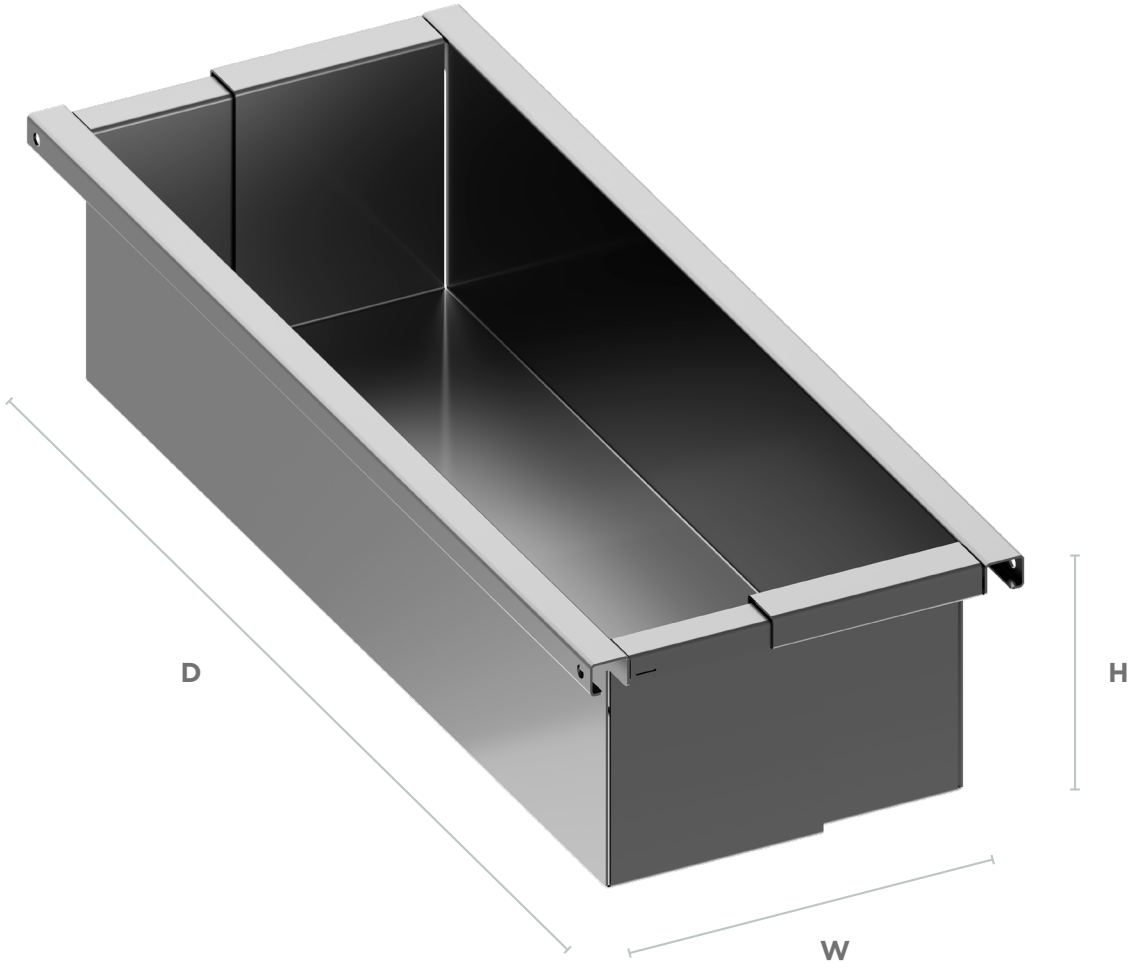

Info

	W	D	H
5E225-16-1	4-5/8” - 7”	12-1/8”	4-1/8”
5E225-20-1	4-5/8” - 7”	15-1/4”	4-1/8”


SIGE
SOLUZIONI PER MOBILI - FURNITURE STORAGE SOLUTIONS
REV-A-SHELF
Innovation through Organization

LAUNDRY HAMPER

LAUNDRY HAMPER

- Frame made of powder-coated metal
- Machine-washable cotton fabric
- Rigid, removable bottom and top cover
- Two versions available for 16” or 20” deep closet systems

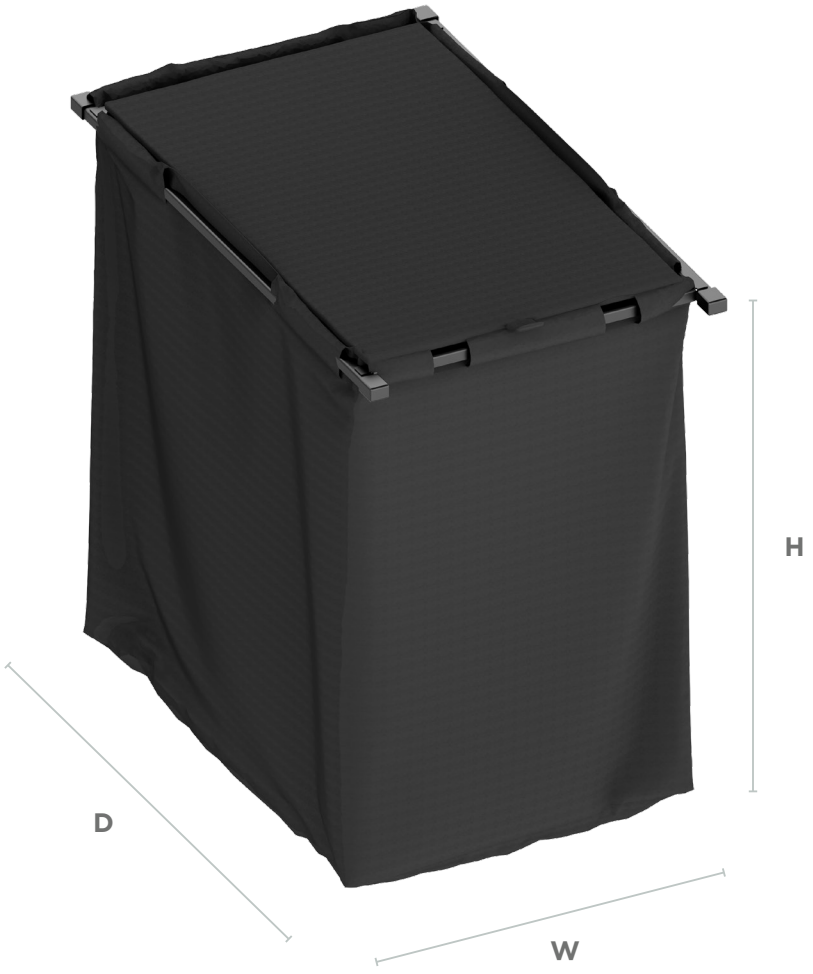

Info

	W	D	H
5E250-9-16-1	9-7/8”	12-1/8”	11-1/2”
5E250-9-20-1	9-7/8”	15-1/4”	11-1/2”


SIGE
SOLUZIONI PER MOBILI - FURNITURE STORAGE SOLUTIONS
REV-A-SHELF
Innovation through Organization

KIT OF 10 TROUSER HOLDERS WITH SKIRT HOOKS

- Made of powder-coated aluminum
- Trouser rod features non-slip rubber insert
- Plastic hook easily attaches to the trouser rod for skirts and other items you wish to hang
- Two versions available for 16” or 20” deep closet systems

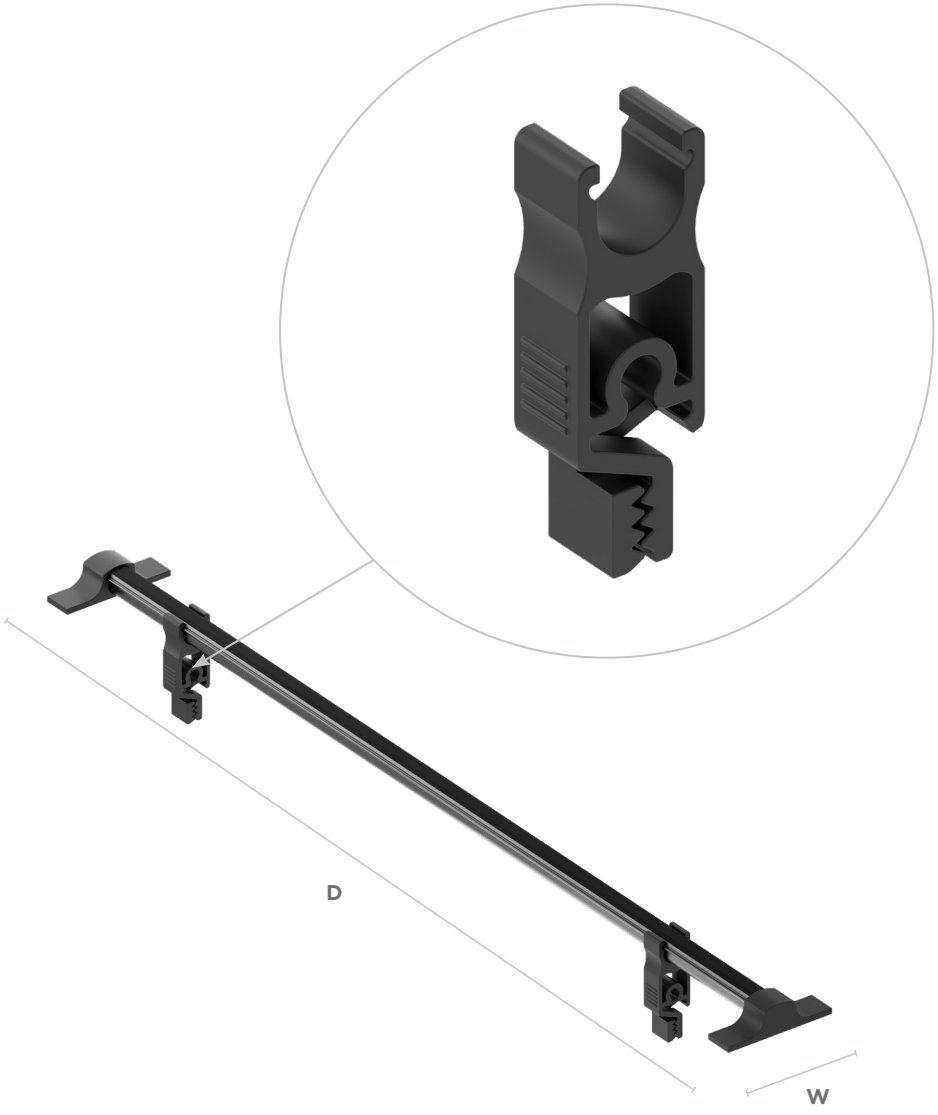

Info

	W	D	H
5E260-16-1	2”	12-1/8”	3”
5E260-20-1	2”	15-1/4”	3”



SIGE
SOLUZIONI PER MOBILI / FURNITURE STORAGE SOLUTIONS

REV-A-SHELF
Innovation through Organization

SHOE HOLDER

SHOE HOLDER

- Made of powder-coated metal
- Multiple positioning for rods to accommodate any type of shoe
- Rods can be cut to size for custom applications
- Two versions available for 16” or 20” deep closet systems

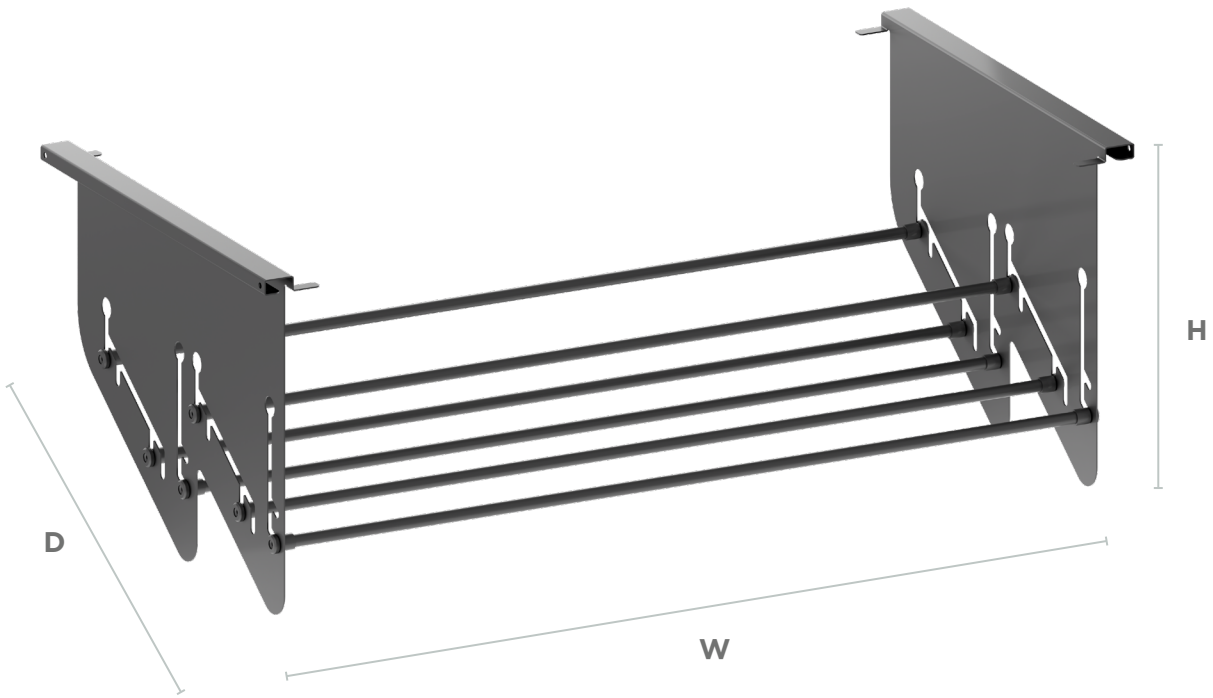

Info

	W	D	H
5E240-3242-16-1	38-3/4”	12-1/8”	11-1/2”
5E240-3242-20-1	38-3/4”	15-1/4”	11-1/2”


SIGE
SOLUZIONI PER MOBILI - FURNITURE STORAGE SOLUTIONS
REV-A-SHELF
Innovation through Organization

EARRING TRAY

- Tray made of powder-coated metal
- Soft and flexible inner lining

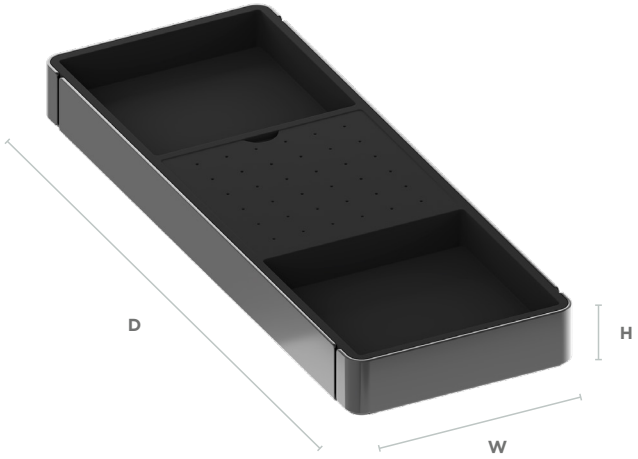

Info

	W	D	H
5E512-16-1	6-3/8”	13-1/8”	1-3/4”
5E512-20-1	6-3/8”	16-1/4”	1-3/4”

WATCH TRAY

- Tray made of powder-coated metal
- Soft and flexible inner lining

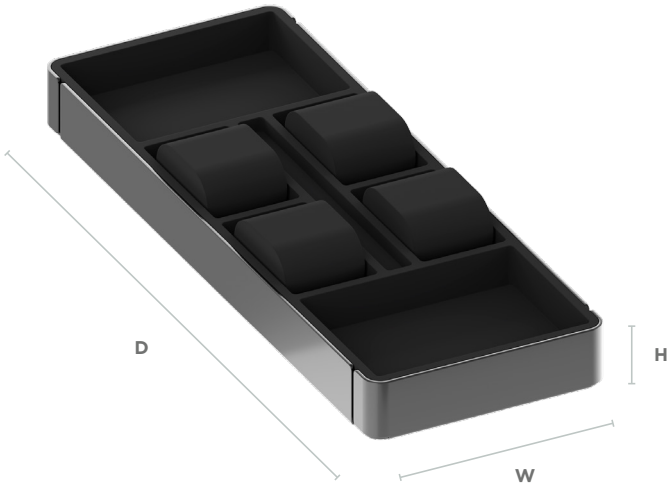

Info

	W	D	H
5E510-16-1	6-3/8”	13-1/8”	2-1/4”
5E510-20-1	6-3/8”	16-1/4”	2-1/4”

2 SPACE CASE

- Tray made of powder-coated metal
- Soft and flexible inner lining

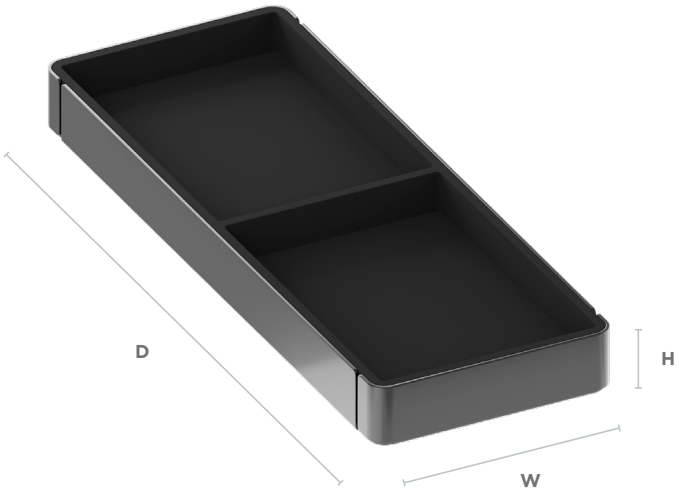

Info

	W	D	H
5E502-16-1	6-3/8”	13-1/8”	1-3/4”
5E502-20-1	6-3/8”	16-1/4”	1-3/4”

4 SPACE CASE

- Tray made of powder-coated metal
- Soft and flexible inner lining

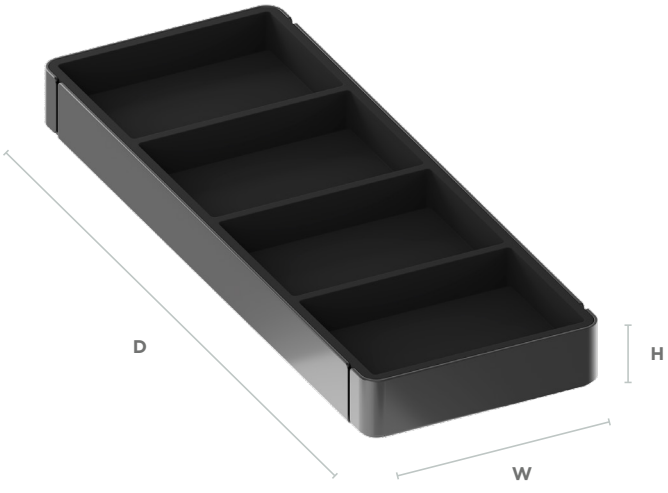

Info

	W	D	H
5E504-16-1	6-3/8”	13-1/8”	1-3/4”
5E504-20-1	6-3/8”	16-1/4”	1-3/4”

5/6 SPACE CASE*

- Tray made of powder-coated metal
- Soft and flexible inner lining

* 5 spaces w/ the 5E506-16-1 & 6 spaces w/ the 5E506-20-1

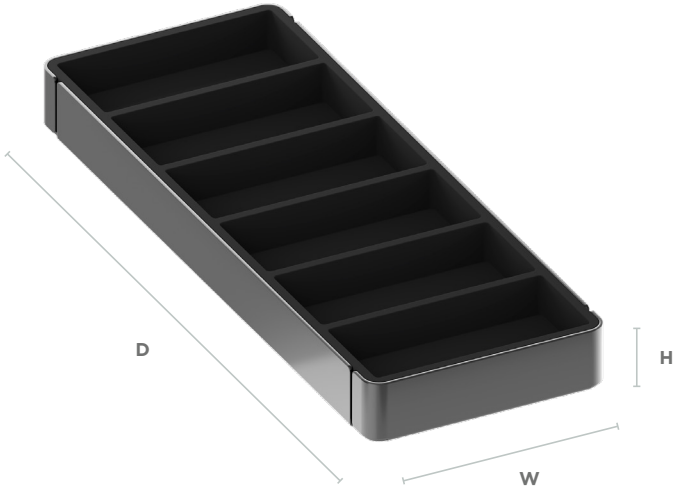

Info

	W	D	H
5E506-16-1	6-3/8”	13-1/8”	1-3/4”
5E506-20-1	6-3/8”	16-1/4”	1-3/4”

POCKET EMPTIER

- Tray made of powder-coated metal
- Soft and flexible inner lining

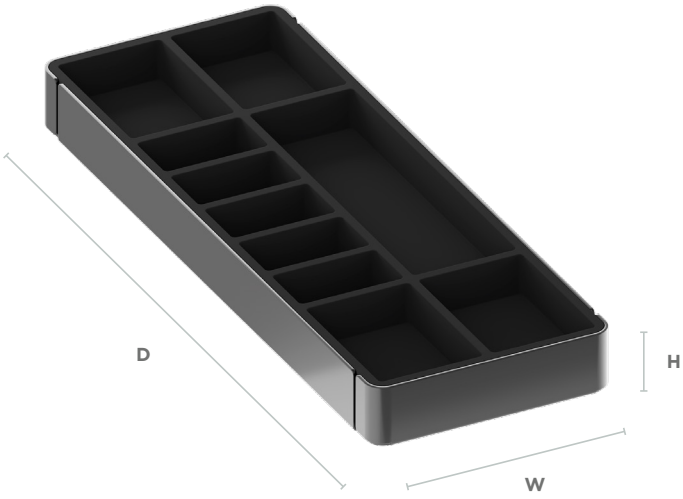

Info

	W	D	H
5E513-16-1	6-3/8”	13-1/8”	1-3/4”
5E513-20-1	6-3/8”	16-1/4”	1-3/4”

NON-SLIP MAT

- Mat made of rubber material
- Trim to fit

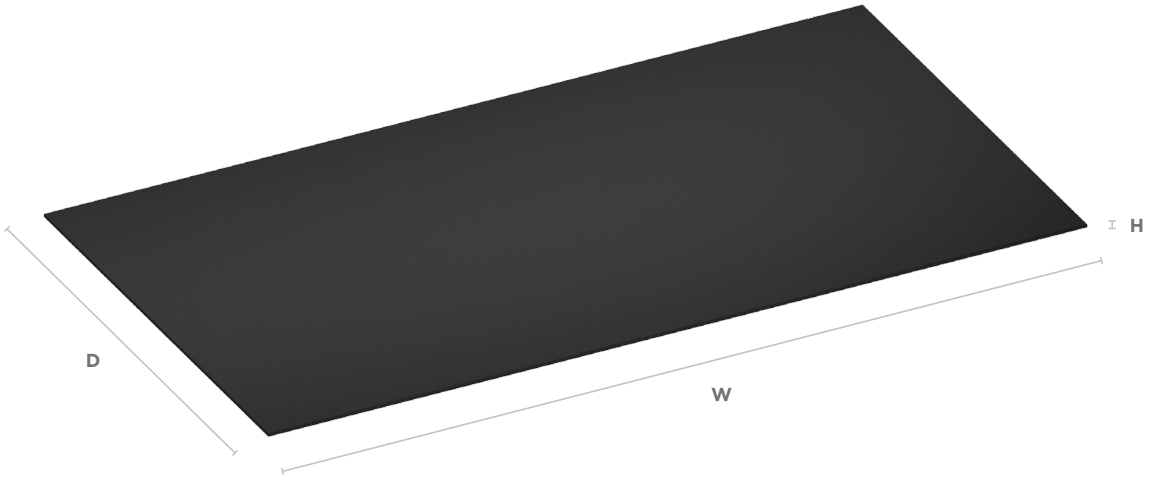

Info

	W	D	H
5E8220-50-16-13-1	49”	10-1/2”	3/32”
5E8220-50-20-13-1	49”	13-5/8”	3/32”

CLOSET ROD

- Rod made of powder-coated aluminum
- Can be cut to desired width
- Mounts to side or top of closet

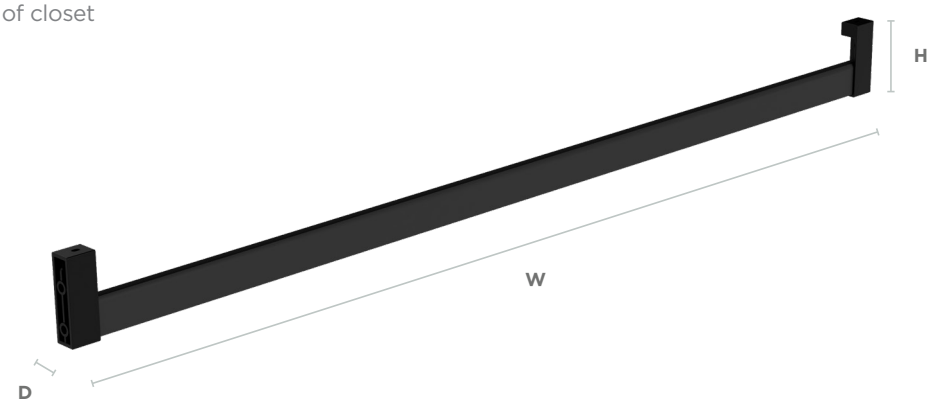

Info

	W	D	H
5E610-42-1	42-1/4”	1/2”	2-7/8”





PRICING

Edge Closet - Frames		
PRODUCT	**DESCRIPTION**	**SLP**
5E100-2030-16-1	19-11/16" - 30-1/2" Adj. Frame - 16" Depth	$543.99
5E100-3242-16-1	19-11/16"-30-1/2" Adj. Frame - 20" Depth	$583.99
5E100-2030-20-1	31-1/2"- 42-11/32" Adj. Frame - 16" Depth	$543.99
5E100-3242-20-1	31-1/2"- 42-11/32" Adj. Frame - 20" Depth	$583.99
Spacer		
5EW100-16-1	1" Spacer	$36.99
Shallow Drawer Tray		
5E220-2030-16-5-1	5" Tall Adj. Drawer Insert - 16" Depth	$254.99
5E220-3242-16-5-1	5" Tall Adj. Drawer Insert - 16" Depth	$292.99
5E220-2030-20-5-1	5" Tall Adj. Drawer Insert - 20" Depth	$254.99
5E220-3242-20-5-1	5" Tall Adj. Drawer Insert - 20" Depth	$296.99
Deep Drawer Tray		
5E220-2030-16-10-1	10" Tall Adj. Drawer Insert - 16" Depth	$319.99
5E220-3242-16-10-1	10" Tall Adj. Drawer Insert - 16" Depth	$366.99
5E220-2030-20-10-1	10" Tall Adj. Drawer Insert - 20" Depth	$319.99
5E220-3242-20-10-1	10" Tall Adj. Drawer Insert - 20" Depth	$370.99
Adjustable Storage Tray		
5E225-16-1	4-1/2"- 6-3/4" Adj. Storage Tray - 16" Depth	$101.99
5E225-20-1	4-1/2"- 6-3/4" Adj. Storage Tray - 20" Depth	$101.99
Laundry Hamper		
5E250-9-16-1	Edge Hamper Insert - 16" Closet	$143.99
5E250-9-20-1	Edge Hamper Insert - 20" Closet	$143.99
(10) Trouser Holders w/ (20) Skirt Hooks		
5E260-16-1	Trouser Holders w/ Skirt Hooks - 16" Depth	$288.99
5E260-20-1	Trouser Holders w/ Skirt Hooks - 20" Depth	$288.99
Shoe Holder		
5E240-3242-16-1	Shoe Organizer Insert For 5E100-3242-16-1	$145.99
5E240-3242-20-1	Shoe Organizer Insert For 5E100-3242-20-1	$163.99
Accessories		
5E512-16-1	2-Space/ Earring Tray - 16" Depth	$119.99
5E512-20-1	2-Space/ Earring Tray - 20" Depth	$119.99
5E510-16-1	2-Space/ Watch Tray - 16" Depth	$130.99
5E510-20-1	2-Space/ Watch Tray - 20" Depth	$130.99
5E502-16-1	2-Space Case - 16" Depth	$101.99
5E502-20-1	2-Space Case - 20" Depth	$101.99
5E504-16-1	4-Space Case - 16" Depth	$101.99
5E504-20-1	4-Space Case - 20" Depth	$101.99
5E506-16-1	5/6-Space Case - 16" Depth	$101.99
5E506-20-1	5/6-Space Case - 20" Depth	$101.99
5E513-16-1	Pocket Emptier - 16" Depth	$101.99
5E513-20-1	Pocket Emptier - 20" Depth	$101.99
Non-Slip Mat		
5E8220-50-16-13-1	Trimmable Non-Slip Mat - 16" Depth	$45.99
5E8220-50-20-13-1	Trimmable Non-Slip Mat - 20" Depth	$45.99
Closet Rod		
5E610-42-1	Trimmable 42" Closet Rod	$85.99



24V Easy Cabinet Lighting Kits

tresco® lighting

TRESCO'S CABINET SIZED LED LINEAR LIGHT KITS ARE EASY!

Easy Sizes

The lights are sized specifically to fit your cabinets.
One light per cabinet, no more dark spots.



Easy Kits

The kits have all the components needed to install.
Kits include:
(1) Aluminum Satin Nickel LED Linear Light w/ 3" input & 3" output cords, (2) 96" Extension/Starter Cords,
(2-4) Mounting Clips, (2-4) Magnets with quick install plates, and (1) Milk Diffuser.



Extra 96" Extension/Starter Cords

Two extra wire extensions are included to extend the input or output leads. Installers will always have what they need, when they need it.

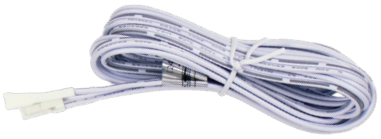

Easy Packaging

Installers can easily identify the appropriate kit for each cabinet with simple and clear labeling.
Example: an 18" wall cabinet will use a kit marked "L-EZSW18-XXXX-1"



Easy Mounting

The lights mount magnetically to metal mounting plates, which are adhered to the cabinet with 3M VHB™ tape for even greater ease and efficiency.



3M VHB™

9”W - 18”W Face Frame Wall Cabinets

- Cabinet sized LED linear lights
- Package is labeled with the cabinet size the fixture is designed to fit
- Maximum continuous run: 16' (192")
- Dimmable
- 2.8W/ft.
- Beam spread: 110°
- Lumens per foot: 390
- CRI value: 90+
- Aluminum construction
  (acts as a heat sink to extend the life of the LEDs)
- Satin nickel finish
- Surface mounted
- Commercial grade 5-year warranty

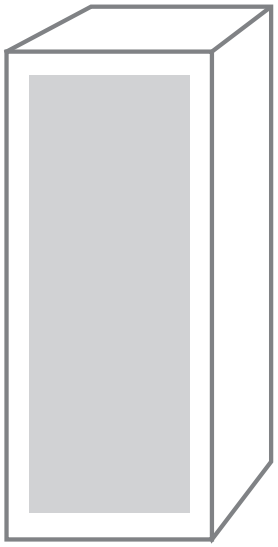

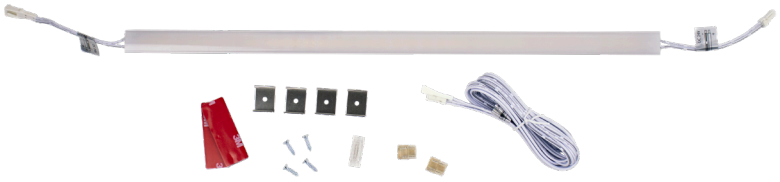

DIMMABLE

c UL us LISTED

5 YEAR WARRANTY

Kit Includes:

(1) Aluminum LED Linear Light w/3" Input & 3" Output Cords (Attached)
(2) 96" Extension/Starter Cords
(2-4) Mounting Clips
(2-4) Magnets with Mounting Plates
(1) Milk Diffuser

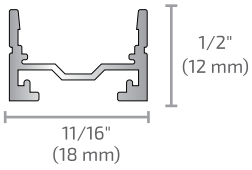

Accessories: Required Optional



Power Supplies
See page 58

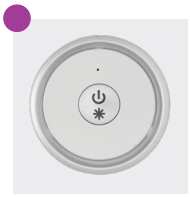

Dimmer Switches
See pages 56

US PATENT NO: D783,533 and 9,618,194

Item#	Fits Face Frame Wall Cabinet	Light Length	Watts	Light Fixture Size	Color Temp.	Light Color
L-EZSW12-35K-1	12”W	10”L	2.50	10”L x 11/16”W x 1/2”H	3500K	Neutral
L-EZSW15-35K-1	15”W	13”L	3.30	13”L x 11/16”W x 1/2”H	3500K	Neutral
L-EZSW18-35K-1	18”W	16”L	4.00	16”L x 11/16”W x 1/2”H	3500K	Neutral

All product dimensions and specifications are subject to change without prior notice.

21”W - 48”W Face Frame Wall Cabine

- Cabinet sized LED linear lights
- Package is labeled with the cabinet size the fixture is designed to fit
- Maximum continuous run: 16' (192")
- Dimmable
- 2.8W/ft.
- Beam spread: 110°
- Lumens per foot: 390
- CRI value: 90+
- Aluminum construction (acts as a heat sink to extend the life of the LEDs)
- Satin nickel finish
- Surface mounted
- Commercial grade 5-year warranty

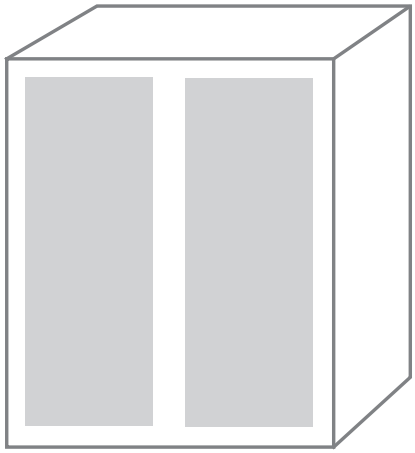

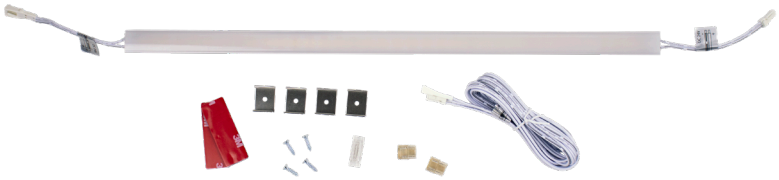

DIMMABLE

c UL us LISTED

5 YEAR WARRANTY

Kit Includes:

(1) Aluminum LED Linear Light w/3” Input & 3” Output Cords (Attached)
(2) 96" Extension/Starter Cords
(2-4) Mounting Clips
(2-4) Magnets with Mounting Plates
(1) Milk Diffuser

US PATENT NO: D783,533 and 9,618,194

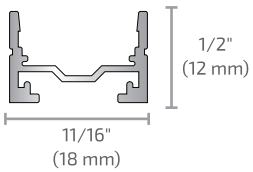

Accessories: Required Optional



Power Supplies
See page 58

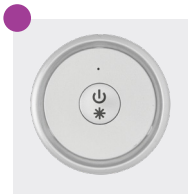

Dimmer Switches
See pages 56

Item#	Fits Face Frame Wall Cabinet	Light Length	Watts	Light Fixture Size	Color Temp.	Light Color
L-EZSW21-35K-1	21"W	19"L	4.75	19"L x 11/16"W x 1/2"H	3500K	Neutral
L-EZSW24-35K-1	24"W	22"L	5.50	22"L x 11/16"W x 1/2"H	3500K	Neutral
L-EZSW27-35K-1	27"W	25"L	6.25	25"L x 11/16"W x 1/2"H	3500K	Neutral
L-EZSW30-35K-1	30"W	28"L	7.00	28"L x 11/16"W x 1/2"H	3500K	Neutral
L-EZSW33-35K-1	33"W	31"L	7.75	31"L x 11/16"W x 1/2"H	3500K	Neutral
L-EZSW36-35K-1	36"W	34"L	8.50	34"L x 11/16"W x 1/2"H	3500K	Neutral
L-EZSW39-35K-1	39"W	37"L	9.25	37"L x 11/16"W x 1/2"H	3500K	Neutral
L-EZSW42-35K-1	42"W	40"L	10.00	40"L x 11/16"W x 1/2"H	3500K	Neutral
L-EZSW45-35K-1	45"W	43"L	10.75	43"L x 11/16"W x 1/2"H	3500K	Neutral
L-EZSW48-35K-1	48"W	46"L	11.50	46"L x 11/16"W x 1/2"H	3500K	Neutral

24"W & 27"W Face Frame Wall Angled Corner Cabinets

- Cabinet sized LED linear lights
- Package is labeled with the cabinet size the fixture is designed to fit
- Maximum continuous run: 16' (192")
- Dimmable
- 2.8W/ft.
- Beam spread: 110°
- Lumens per foot: 390
- CRI value: 90+
- Aluminum construction (acts as a heat sink to extend the life of the LEDs)
- Satin nickel finish
- Surface mounted
- Commercial grade 5-year warranty

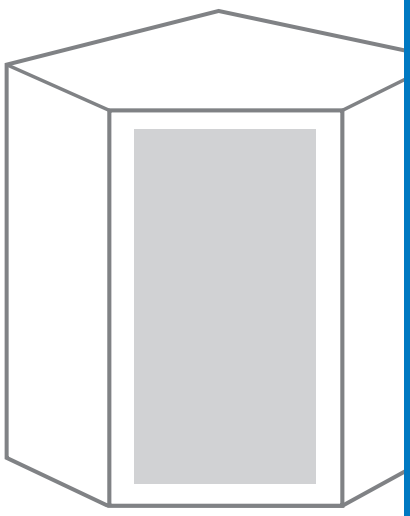

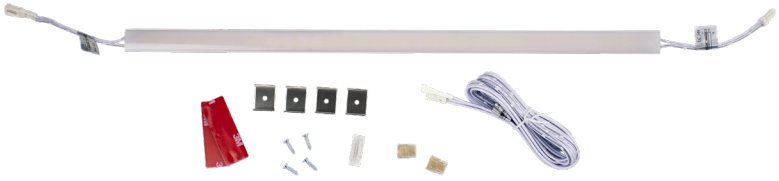

DIMMABLE

c UL us LISTED

5 YEAR WARRANTY

Kit Includes:

(1) Aluminum LED Linear Light w/3" Input & 3" Output Cords (Attached)
(2) 96" Extension/Starter Cords
(2-4) Mounting Clips
(2-4) Magnets with Mounting Plates
(1) Milk Diffuser

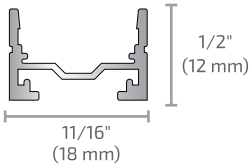

Accessories: Required Optional



Power Supplies
See page 58

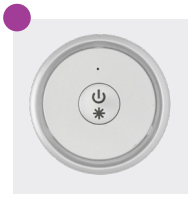

Dimmer Switches
See pages 56

US PATENT NO: D783,533 and 9,618,194

Item#	Fits Face Frame Wall Cabinet	Light Length	Watts	Light Fixture Size	Color Temp.	Light Color
L-EZSW24-35K-1	24"W	22"L	5.50	22"L x 11/16"W x 1/2"H	3500K	Neutral
L-EZSW27-35K-1	27"W	25"L	6.25	25"L x 11/16"W x 1/2"H	3500K	Neutral

24"W Face Frame Wall Square Corner Cabinet

- Cabinet sized LED linear lights
- Package is labeled with the cabinet size the fixture is designed to fit
- Maximum continuous run: 16' (192")
- Dimmable
- 2.8W/ft.
- Beam spread: 110°
- Lumens per foot: 390
- CRI value: 90+
- Aluminum construction (acts as a heat sink to extend the life of the LEDs)
- Satin nickel finish
- Surface mounted
- Commercial grade 5-year warranty

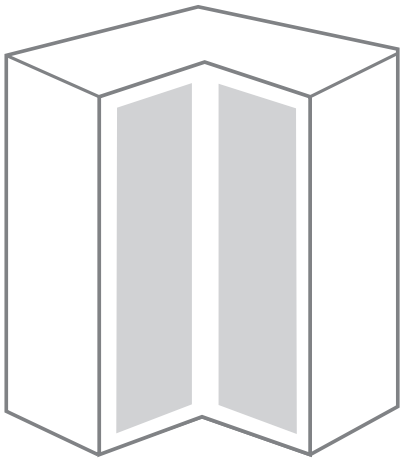

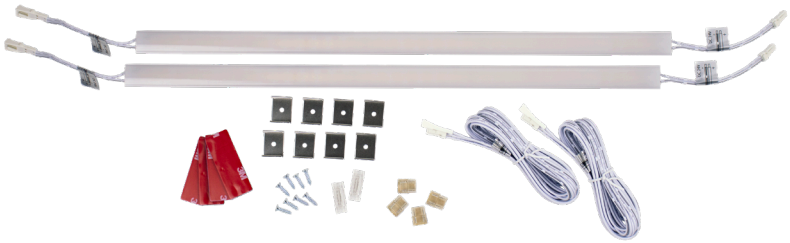

DIMMABLE

c UL us LISTED

5 YEAR WARRANTY

Kit Includes:

(2) Aluminum LED Linear Light w/3" Input & 3" Output Cords (Attached)
(4) 96" Extension/Starter Cords
(2-4) Mounting Clips
(2-4) Magnets with Mounting Plates
(2) Milk Diffuser

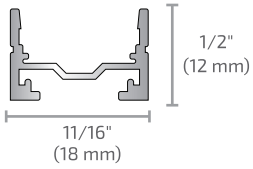

Accessories: Required Optional



Power Supplies
See page 58



Dimmer Switches
See pages 56

US PATENT NO: D783,533 and 9,618,194

Item#	Fits Face Frame Wall Cabinet	Light Length	Watts	Light Fixture Size	Color Temp.	Light Color
L-EZSW24-35K-1	24"W	10"L	2.50	10"L x 11/16"W x 1/2"H	3500K	Neutral

24"W - 30"W Face Frame Wall Blind Corner Cabinet

- Cabinet sized LED linear lights
- Package is labeled with the cabinet size the fixture is designed to fit
- Maximum continuous run: 16' (192")
- Dimmable
- 2.8W/ft.
- Beam spread: 110°
- Lumens per foot: 390
- CRI value: 90+
- Aluminum construction (acts as a heat sink to extend the life of the LEDs)
- Satin nickel finish
- Surface mounted
- Commercial grade 5-year warranty

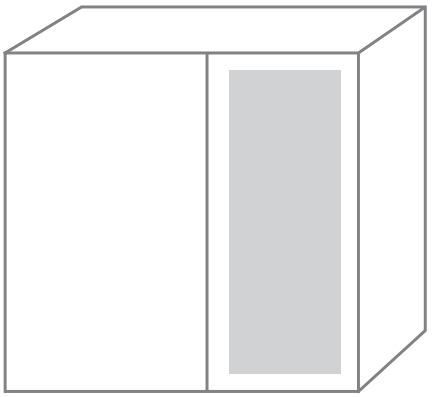



DIMMABLE

c UL us LISTED

5 YEAR WARRANTY

Kit Includes:

(1) Aluminum LED Linear Light w/3" Input & 3" Output Cords (Attached)
(2) 96" Extension/Starter Cords
(2-4) Mounting Clips
(2-4) Magnets with Mounting Plates
(1) Milk Diffuser

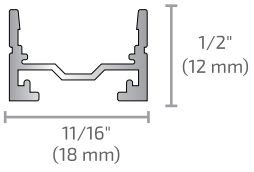

Accessories: Required Optional



Power Supplies
See page 58

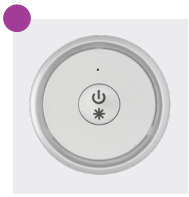

Dimmer Switches
See pages 56

US PATENT NO: D783,533 and 9,618,194

Item#	Fits Face Frame Wall Cabinet	Light Length	Watts	Light Fixture Size	Color Temp.	Light Color
L-EZSW24-35K-1	24"W	22"L	5.50	22"L x 11/16"W x 1/2"H	3500K	Neutral
L-EZSW27-35K-1	27"W	25"L	6.25	25"L x 11/16"W x 1/2"H	3500K	Neutral
L-EZSW30-35K-1	30"W	28"L	7.00	28"L x 11/16"W x 1/2"H	3500K	Neutral



OptiPockit DM Recessed LED Puck Light

- Wide 110º beam spread
- Nickel , Black and White finishes
- Surface mount ring (*sold separately*)
- Dimmable
- High output (279 lumens)
- CRI value: 90+
- Luniform output - no "dots"
- Commercial grade 5-year warranty

OptiPockit Surface Mount Accessories



Accessories: Required Optional



Power Supplies
See page 58

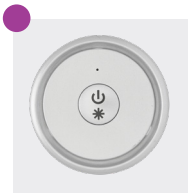

Dimmer Switches
See pages 56

OptiPockit Recessed LED Puck Light	
Item #	**Description**
L-OPDM-24R27K-NBW-1	OptiPockit Dimmable, 24VDC Round, 3W, 2700K, NI/WH/BL Trims
L-OPDM-24R30K-NBW-1	OptiPockit Dimmable, 24VDC Round, 3W, 3000K, NI/WH/BL Trims
L-OPDM-24R35K-NBW-1	OptiPockit Dimmable, 24VDC Round, 3W, 3500K, NI/WH/BL Trims
L-OPDM-24R50K-NBW-1	OptiPockit Dimmable, 24VDC Round, 3W, 5000K, NI/WH/BL Trims

Installation Setup for FreeDim Wireless Controllers

(Micro Dimmer, Deco Wall Dimmer)



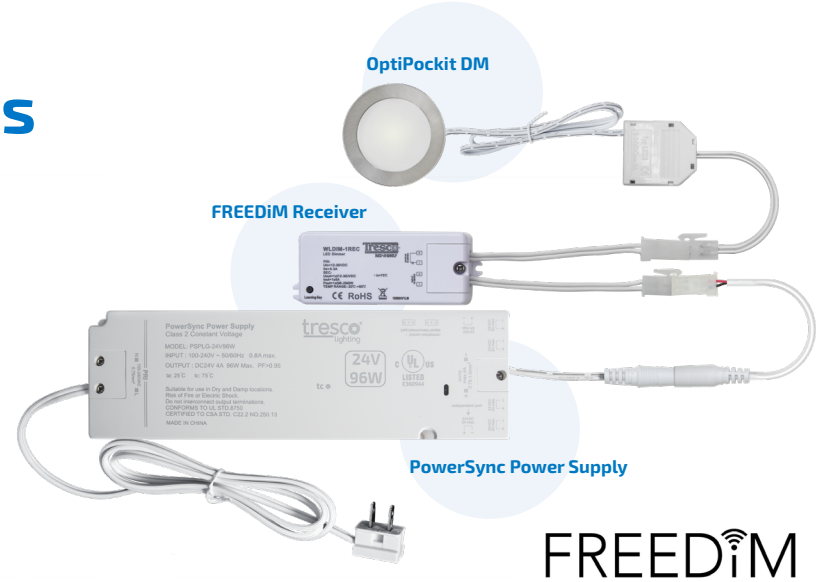

FREEDiM WIRELESS CONTROL



Micro Dimmer





Receiver

Micro Dimmer

- Single zone wireless dimmer
- Nickel finish
- Easy to replace, long life lithium battery
- 65' range of control from dimmer to receiver
- Mounting case can be mounted with screws or onto a metallic surface using the integrated magnet
- A single dimmer can be programmed to up to 10 different receivers; a single receiver can be programmed to up to 8 different dimmers
- A Universal Receiver (sold separately) is required to operate Micro Dimmers

Item #	Description
FREEDiM Series Micro Dimmer	
L-WLD-1RND-NI-1	FREEDiM Series Micro Dimmer, Nickel

Must have at least one receiver (L-WLD-1REC-1) to operate

Item #	Description
L-WLD-1REC-1	96 Watts, 24VDC, Universal Receiver



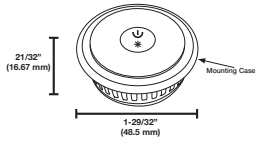

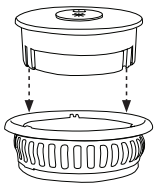

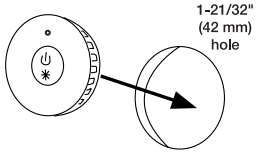

Dimmer Switches



Deco Wall Dimmer

FREEDiM WIRELESS CONTROL

- Single & two zone wireless dimmers
- Black or white finish
- Easy to replace, long life lithium battery
- 65' range of control from dimmer to receiver
- Can be mounted to standard wall electrical boxes or directly to drywall
- A single dimmer can be programmed to up to 10 different receivers; a single receiver can be programmed to up to 8 different dimmers
- A Universal Receiver (sold separately) is required to operate Deco Wall Dimmers



Single Zone



Two Zone







No Wires!

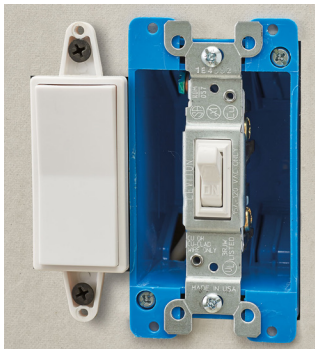

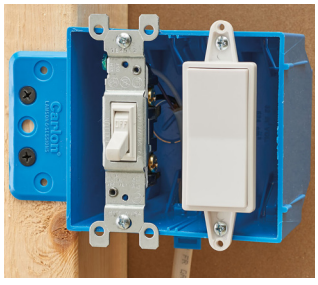

Item#	Description
Single Zone Deco Wall Dimmer	
L-WLD-1WAL-WH-1	FREEDiM Series Deco Wall Dimmer, White Finish
L-WLD-1WAL-BL-1	FREEDiM Series Deco Wall Dimmer, Black Finish
Two Zone Deco Wall Dimmer	
L-WLD-2WAL-WH-1	FREEDiM Series Two Zone Deco Wall Dimmer, White Finish

Must have at least one receiver (L-WLD-1REC-1) to operate

Item #	Description
L-WLD-1REC-1	96 Watts, 24VDC, Universal Receiver



PowerSync Power Supplies

60W and 96W PowerSync Power Supplies feature a 5-AMP terminal block, supporting higher-wattage applications for enhanced reliability and performance.

Features:

- Short circuit protection*
- 24V DC output, constant voltage
- Overload protection
- Dimmable on trailing edge (24V side)
- Class 2
- Commercial grade 5-Year warranty

* Automatic reset (no fuses)

60W



96W

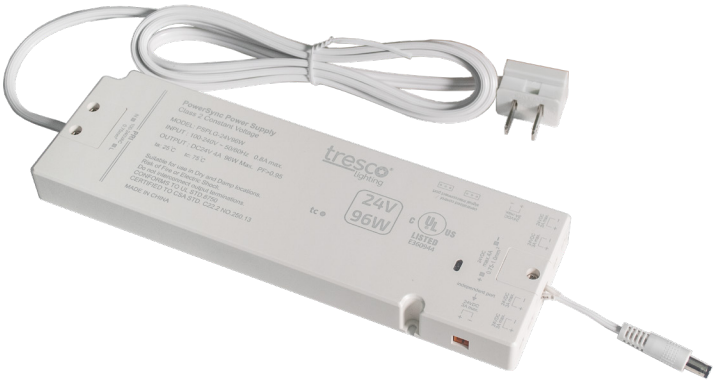

c UL us LISTED

60W



96W



Six MINI Ports and a 5-AMP Terminal Block

Item #	Description
L-PSPLG-24V60W-1	24 VDC 60 Watt Power Supply w/ (6) MINI Ports and Terminal Block
L-PSPLG-24V96W-1	24 VDC 96 Watt Power Supply w/ (6) MINI Ports and Terminal Block

Typical Installation

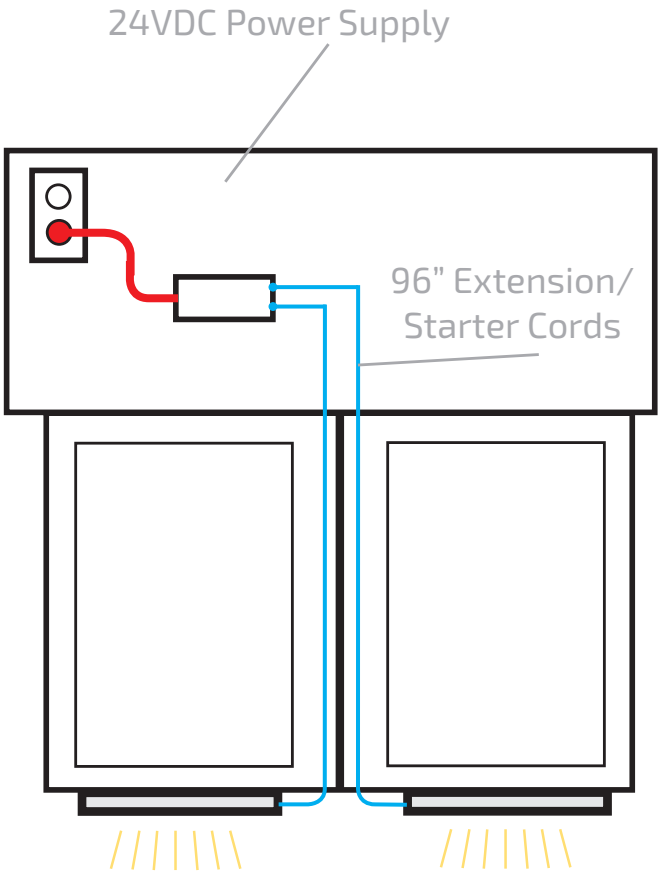

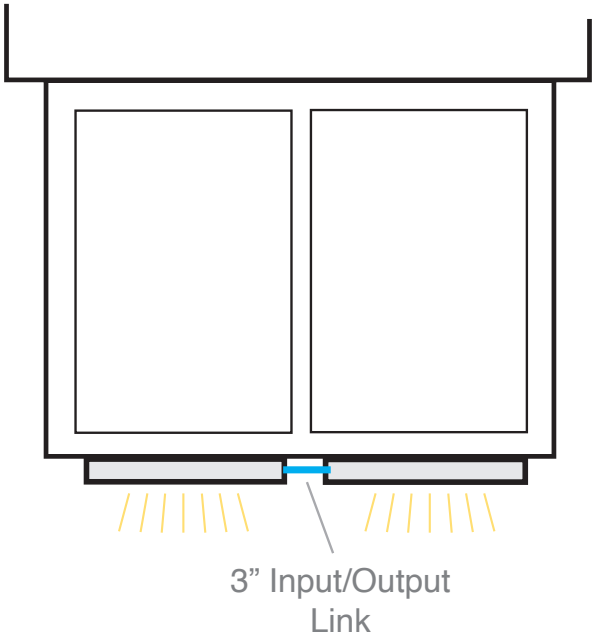







Layout Design Services

Visit
trescolighting.com/layout

Fill out the form and
upload your drawings

Receive your professionally engineered
schematic and matching parts list

Scan to Visit



24V Easy Cabinet Lighting Kits

tresco lighting

Pricing

** = 30, 35 or 50 color temperature

PRODUCT	DESCRIPTION	SLP
Easy Cabinet Lighting Kit - 9"W - 18"W Face Frame Wall Cabinets		
L-EZSW12-**K-1	Lighting Kit for 12" Wall Cabinet	$82.99
L-EZSW15-**K-1	Lighting Kit for 15" Wall Cabinet	$87.99
L-EZSW18-**K-1	Lighting Kit for 18" Wall Cabinet	$93.99
Easy Cabinet Lighting Kit - 21"W - 48"W Face Frame Wall Cabinets		
L-EZSW21-**K-1	Lighting Kit for 21" Wall Cabinet	$98.99
L-EZSW24-**K-1	Lighting Kit for 24" Wall Cabinet	$104.99
L-EZSW27-**K-1	Lighting Kit for 27" Wall Cabinet	$110.99
L-EZSW30-**K-1	Lighting Kit for 30" Wall Cabinet	$116.99
L-EZSW33-**K-1	Lighting Kit for 33" Wall Cabinet	$122.99
L-EZSW36-**K-1	Lighting Kit for 36" Wall Cabinet	$127.99
L-EZSW39-**K-1	Lighting Kit for 39" Wall Cabinet	$133.99
L-EZSW42-**K-1	Lighting Kit for 42" Wall Cabinet	$140.99
L-EZSW45-**K-1	Lighting Kit for 45" Wall Cabinet	$146.99
L-EZSW48-**K-1	Lighting Kit for48" Wall Cabinet	$151.99
Easy Cabinet Lighting Kit - 24"W & 27"W Face Frame Wall Angled Corner Cabinets		
L-EZSW24-35K-1	Lighting Kit for 24" Angled Wall Cabinet	$104.99
L-EZSW27-35K-1	Lighting Kit for 27" Angled Wall Cabinet	$110.99
Easy Cabinet Lighting Kit - 24"W Face Frame Wall Square Corner Cabinet		
L-EZSW24-35K-1	Lighting Kit for 24" Square Wall Corner Cabinet	$104.99
Easy Cabinet Lighting Kit - 24"W Face Frame Wall Square Corner Cabinet		
L-EZSW24-**K-1	Lighting Kit for 24" Wall Cabinet	$104.99
L-EZSW27-**K-1	Lighting Kit for 27" Wall Cabinet	$110.99
L-EZSW30-**K-1	Lighting Kit for 30" Wall Cabinet	$116.99
OptiPockit DM Recessed LED Puck Light		
L-OPDM-24R27K-NBW-1	24VDC, 2700K Puck Light	$58.99
L-OPDM-24R30K-NBW-1	24VDC,3000K Puck Light	$58.99
L-OPDM-24R35K-NBW-1	24VDC, 3500K Puck Light	$58.99
L-OPDM-24R50K-NBW-1	24VDC, 5000K Puck Light	$58.99
FREEDiM Controllers		
L-WLD-1RND-NI-1	Micro Dimmer, Nickel	$117.99
L-WLD-1WAL-WH-1	Single Zone Dimmer, White	$179.99
L-WLD-1WAL-BL-1	Single Zone Dimmer, B lack	$179.99
L-WLD-2WAL-WH-1	Two-Zone Dimmer, White	$196.99
FREEDiM Universal Reciever		
L-WLD-1REC-1	Universal Receiver	$117.99
PowerSync Power Supply		
L-PSPLG-24V60W-1	24 V 60 Watt Power Supply	$93.99
L-PSPLG-24V96W-1	24 V 96 Watt Power Supply	$120.99

Controllers

The Control You Trust. Reimagined for Today.

P 345

The newly redesigned PowerSync Wired and Wireless Controllers deliver the same trusted performance with a cleaner, more modern design reimagined for today's space. Built to work seamlessly with Tresco® PowerSync power supplies and LED lighting, they offer intuitive control for everything from accent lighting to full task illumination.

With seven wired and five wireless options including touch, motion, and door-activated styles, PowerSync makes lighting effortless. Available in finishes from white and/or nickel, these controllers provide clean integration and reliable performance that responds naturally to how spaces are used.



L-PSCTL-TDS-NI-1
Side Mount

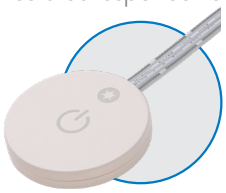

L-PSCTL-TCS-WH-1
Surface Mount



L-PSWLS-CDS-1
Wireless Door Censor



L-PSCTL-TCU-WH-1
Undermount Switch

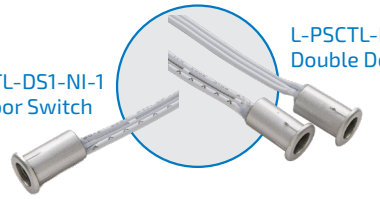

L-P-PSCTL-DS1-NI-1
Single Door Switch

L-PSCTL-DS2-NI-1
Double Door Switch



L-PSWLS-CTD-NI-1
Wireless Touch Dimmer





COB Flextape®

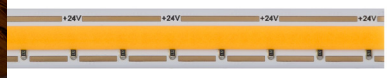

Seamless Light. No Diffuser Needed.

COB FlexTape® delivers the next evolution in LED tape lighting. Featuring high-density Chip on Board technology, this 24V flexible strip provides a smooth, continuous glow with no visible hotspots; no diffusers required.

Available in two color options and 20-foot rolls, COB FlexTape® offers virtually limitless cut points for precise customization, making it easy to achieve clean, professional lighting in any application.

Fineline3.0

Precision Light. Virtually Invisible.



Slim, powerful, and beautifully precise - FineLine® 3.0 delivers high-performance lighting in an ultra-low-profile design. At just 10 mm, it disappears into cabinetry while providing smooth, even illumination through advanced Luniform™ technology.

With selectable white tuning, FineLine® 3.0 lets you shift from warm, wood-enhancing tones to crisp, clean light - perfect for cabinets, displays, accents, and task lighting.

Omega National
PRODUCTS
By:
REV-A-SHELF









TIMELESS WOOD HOODS, FLOATING SHELVES & BRACKETS

UNMATCHED CRAFTSMANSHIP!

P 378






Innovation through Organization™







WASTE SOLUTIONS

CONTAIN THE **MESS**

Renowned as the most complete and thorough line available, Rev-A-Shelf's waste container series includes traditional wire, classic wood, stainless-steel and aluminum frames, paired with our polymer containers. We have designed a pullout waste container for every situation in your home. The options are endless.

PROP 65 WARNING FOR CALIFORNIA RESIDENTS

WARNING: These products can expose you to chemicals such as formaldehyde, lead or styrene, which are known to the State of California to cause cancer and birth defects or other reproductive harm. For more information go to www.P65Warnings.ca.gov

REV-A-SHELF®

4WCWM Series

Maple Bottom Mount Waste Management Center

- Designed for 24" base cabinets
- Natural maple construction with a semi-gloss finish
- Reversible design
- BLUM MOVENTO soft-close slides
- Side storage compartment with a waterproof vinyl lining
- Mounts to cabinet floor and door
- Patented pre-assembled door-mount brackets (US Patent No., 8,338,076)
- 4WCWM-4 includes (2) 35 or 50 qt. silver polymer waste containers, (1) green lid, (2) 8 L waste containers, (2) 8 L lids (one white and one green) and (1) removable beauty ring
- 4WCWM-2 includes (2) 35 or 50 qt. silver polymer waste containers and (1) green lid
- Additional or replacement 35 and 50 qt. polymer lids available (sold separately)
- TSCA Title VI compliant



4WCWM-2435DMSC-4



Double 50 qt. waste container with side storage



Double 50 qt. waste container with double 8 L bins



Double 35 qt. waste container with double 8 L bins

NOTE: Depending on cabinet construction and pull hardware, a lid on the rear waste bin may not fully function See pg. 68 for replacement containers and pg. 70 for lids.

Maple Bottom Mount Waste Management Center w/ BLUM Soft-Close

PRODUCT	DESCRIPTION	DIMS	MCO	CAB	FINISH	SLP
4WCWM-2435DMSC-2	Double 35 qt.	20-31/32" (533 mm) W x 22-1/32" (560 mm) D x 20-21/32" (526 mm) H	21" (534 mm)	B24	Maple/Silver	$659.99
4WCWM-2435DMSC-4	Dbl. 35 qt. & Dbl. 8 L	20-31/32" (533 mm) W x 22-1/32" (560 mm) D x 20-21/32" (526 mm) H	21" (534 mm)	B24	Maple/Silver	$679.99
4WCWM-2450DMSC-2	Double 50 qt.	20-31/32" (533 mm) W x 22-1/32" (560 mm) D x 24-9/16" (625 mm) H	21" (534 mm)	FHB24	Maple/Silver	$673.99
4WCWM-2450DMSC-4	Dbl. 50 qt. & Dbl. 8 L	20-31/32" (533 mm) W x 22-1/32" (560 mm) D x 24-9/16" (625 mm) H	21" (534 mm)	FHB24	Maple/Silver	$692.99

Wood Bottom Mount Waste Center

4WCOX Series



- Designed for 24" door/drawer base cabinets
- Natural maple dovetail construction with a semi-gloss finish
- BLUM MOVENTO soft-close slides
- Patented door-mount brackets with micro-adjustment (US Patent No: 8,338,076)
- Unique large storage compartment located under side storage
- (1) reversible left or right-hand mounting
- Included accessories: (2) 35 qt., BPA-free polymer containers, white, (2) lids, white and (1) 1.7 qt. OXO® container
- Mounts to cabinet floor and door
- TSCA Title VI compliant



4WCOX-24DMSC-1
Wood Bottom Mount Waste Container w/ OXO® & Storage

Wood Bottom Mount Waste Container with OXO® and Storage						
PRODUCT	DESCRIPTION	DIMS	MCO	CAB	FINISH	SLP
4WCOX-24DMSC-1	Double 35 qt. w/ OXO® & Storage	20-31/32" (533 mm) W x 22-1/32" (560 mm) D x 20-21/32" (526 mm) H	21" (534 mm)	B24	Maple/White	$698.99

Replacement Containers



NEW DESIGN!

CUSTOM COLOR?
We CAN Do It!

- Do you just need a replacement? Here's a list of all the waste containers available.
  White (11)
  Orion gray (13)
  Gray (14)
  Metallic silver (17)
  Black (18)
  Blue (22)
  Green (G)



4TMBIN

PRODUCT	SERIES
RV-1024W	RV-15, 4WCTM-15 and 4WCTM-27-4
RV-1024-13-10	53WC Series
RV-1024-17-10	5149, 5349 Series
RV-20-6	RV-8 and RV-14
RV-35-8	5149, 5349 Series and 4WCTM Series
RV-35-13-8	53WC Series, 4WC-WN, 5LB
RV-50-13-10	53WC Series, 4WC-WN, 4WCTM-WNRM, 5LB
RV-35-17-8	5149, 5349, 4WCSD, 4WCSC, RV, 53WC Series
RV-35-17-8	53WC Series
RV-50-10	4WCTM Series
RV-50-17-10	5149, 5349, 4WCSD, 4WCSC, 53WC Series
RV-50-17-10	53WC Series
RV-8-1711-1	53TM Series, 4SOWC Series, 5SB Series
RV-8-1719-1	53TM Series, 4SOWC Series
4TMBIN (ALL)	4WTCM Series (except 4WCTM-RM)

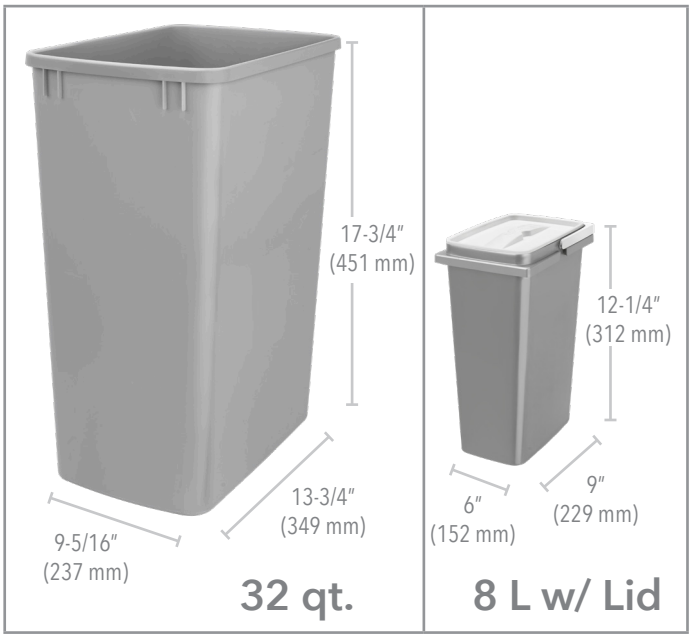

** select "BK" for black, "GR" for green,"OG" for orion gray, "WH" for white

Replacement Waste Containers (Bulk Pack)

PRODUCT	DESCRIPTION	DIMS	FINISH	SLP
RV-32-11-8	(8) 32 qt.	13-3/4" (349 mm) W x 9-5/16" (237 mm) D x 17-3/4" (451 mm) H	White Polymer	$17.99
RV-32-14-8	(8) 32 qt.	13-3/4" (349 mm) W x 9-5/16" (237 mm) D x 17-3/4" (451 mm) H	Gray Polymer	$17.99
RV-32-17-8	(8) 32 qt.	13-3/4" (349 mm) W x 9-5/16" (237 mm) D x 17-3/4" (451 mm) H	Metallic Silver Polymer	$25.99
RV-20-6	(6) 20 qt.	8-1/4" (210 mm) W x 14-7/32" (362 mm) D x 14-7/8" (378 mm) H	White Polymer	$16.99
RV-20-14-6	(6) 20 qt.	14-7/32" (362 mm) W x 8-1/4" (210 mm) D x 14-7/8" (378 mm) H	Gray Polymer	$16.99
RV-35-8	(8) 35 qt.	14-7/32" (361 mm) W x 10-15/32" (266 mm) D x 17-27/32" (454 mm) H	White Polymer	$24.99
RV-35-13-8	(8) 35 qt.	14-7/32" (361 mm) W x 10-15/32" (266 mm) D x 17-27/32" (454 mm) H	Orion Gray Polymer	$24.99
RV-35-17-8	(8) 35 qt.	14-7/32" (361 mm) W x 10-15/32" (266 mm) D x 17-27/32" (454 mm) H	Metallic Silver Polymer	$24.99
RV-35-18-8	(8) 35 qt.	14-7/32" (361 mm) W x 10-15/32" (266 mm) D x 17-27/32" (454 mm) H	Black Polymer	$24.99
RV-50-11-10	(10) 50 qt.	14-3/4" (375 mm) W x 10-21/32" (272 mm) D x 21-3/4" (553 mm) H	White Polymer	$33.99
RV-50-13-10	(10) 50 qt.	14-3/4" (375 mm) W x 10-21/32" (272 mm) D x 21-3/4" (553 mm) H	Orion Gray Polymer	$33.99
RV-50-14-10	(10) 50 qt.	14-3/4" (375 mm) W x 10-21/32" (272 mm) D x 21-3/4" (553 mm) H	Gray	$33.99
RV-50-17-10	(10) 50 qt.	14-3/4" (375 mm) W x 10-21/32" (272 mm) D x 21-3/4" (553 mm) H	Metallic Silver Polymer	$33.99
RV-50-18-10	(10) 50 qt.	14-3/4" (375 mm) W x 10-21/32" (272 mm) D x 21-3/4" (553 mm) H	Black	$33.99
RV-1024W	(10) 27 qt.	10-19/32" (269 mm) W x 10-19/32" (269 mm) D x 17-3/4" (451 mm) H	White Polymer	$24.99
RV-1024-17-10	(10) 27 qt.	10-19/32" (269 mm) W x 10-19/32" (269 mm) D x 17-3/4" (451 mm) H	Metallic Silver Polymer	$24.99
RV-1024-18-10	(10) 27 qt.	10-19/32" (269 mm) W x 10-19/32" (269 mm) D x 17-3/4" (451 mm) H	Black Polymer	$24.99
4WCTM Replacement Polymer Rear Storage Bins				
4TMBIN-6	(6) Replacement Polymer Bins	10-11/32" (263 mm) W x 7-1/4" (185 mm) D x 6-11/32" (162 mm) H	White Polymer	$11.99
4TMBIN-15-6	(6) Replacement Polymer Bins	10-11/32" (263 mm) W x 7-1/4" (185 mm) D x 6-11/32" (162 mm) H	Almond Polymer	$11.99
4TMBIN-17-6	(6) Replacement Polymer Bins	10-11/32" (263 mm) W x 7-1/4" (185 mm) D x 6-11/32" (162 mm) H	Metallic Silver Polymer	$12.99

RV Series

Replacement Lids

NEW DESIGN!

- Bi-Directional Polymer lids for 27, 32, 35/50 qt. polymer containers:
  White (11)
  Orion gray (13)
  Gray (14)
  Metallic silver (17)
  Black (18)
  Blue (22)
  Green (G)



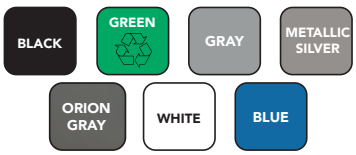

Polymer Lids for 27, 32, 35/50 qt. Waste Containers

PRODUCT	DESCRIPTION	FINISH	SLP
RV-1024-LID-1	27 qt. Bi-Directional Waste Container Lid	White	$19.99
RV-1024-LID-13-1	27 qt. Bi-Directional Waste Container Lid	Orion Gray	$19.99
RV-1024-LID-14-1	27 qt. Bi-Directional Waste Container Lid	Gray	$19.99
RV-1024-LID-17-1	27 qt. Bi-Directional Waste Container Lid	Metallic Silver	$19.99
RV-1024-LID-18-1	27 qt. Bi-Directional Waste Container Lid	Black	$19.99
RV-1024-LID-22-1	27 qt. Bi-Directional Waste Container Lid	Blue	$19.99
RV-1024-LID-G-1	27 qt. Bi-Directional Waste Container Lid	Green	$19.99
RV-32-LID-1	32 qt. Bi-Directional Waste Container Lid	White	$20.99
RV-32-LID-14-1	32 qt. Bi-Directional Waste Container Lid	Gray	$20.99
RV-32-LID-17-1	32 qt. Bi-Directional Waste Container Lid	Metallic Silver	$20.99
RV-32-LID-22-1	32 qt. Bi-Directional Waste Container Lid	Blue	$20.99
RV-32-LID-G-1	32 qt. Bi-Directional Waste Container Lid	Green	$20.99
RV-3550-LID-11-1	35/50 qt. Bi-Directional Waste Container Lid	White	$20.99
RV-3550-LID-13-1	35/50 qt. Bi-Directional Waste Container Lid	Orion Gray	$20.99
RV-3550-LID-14-1	35/50 qt. Bi-Directional Waste Container Lid	Gray	$20.99
RV-3550-LID-17-1	35/50 qt. Bi-Directional Waste Container Lid	Metallic Silver	$20.99
RV-3550-LID-18-1	35/50 qt. Bi-Directional Waste Container Lid	Black	$20.99
RV-3550-LID-19-1	35/50 qt. Bi-Directional Waste Container Lid	Green	$20.99
RV-3550-LID-22-1	35/50 qt. Bi-Directional Waste Container Lid	Blue	$20.99

Tip-On Kits

TOKIT Series

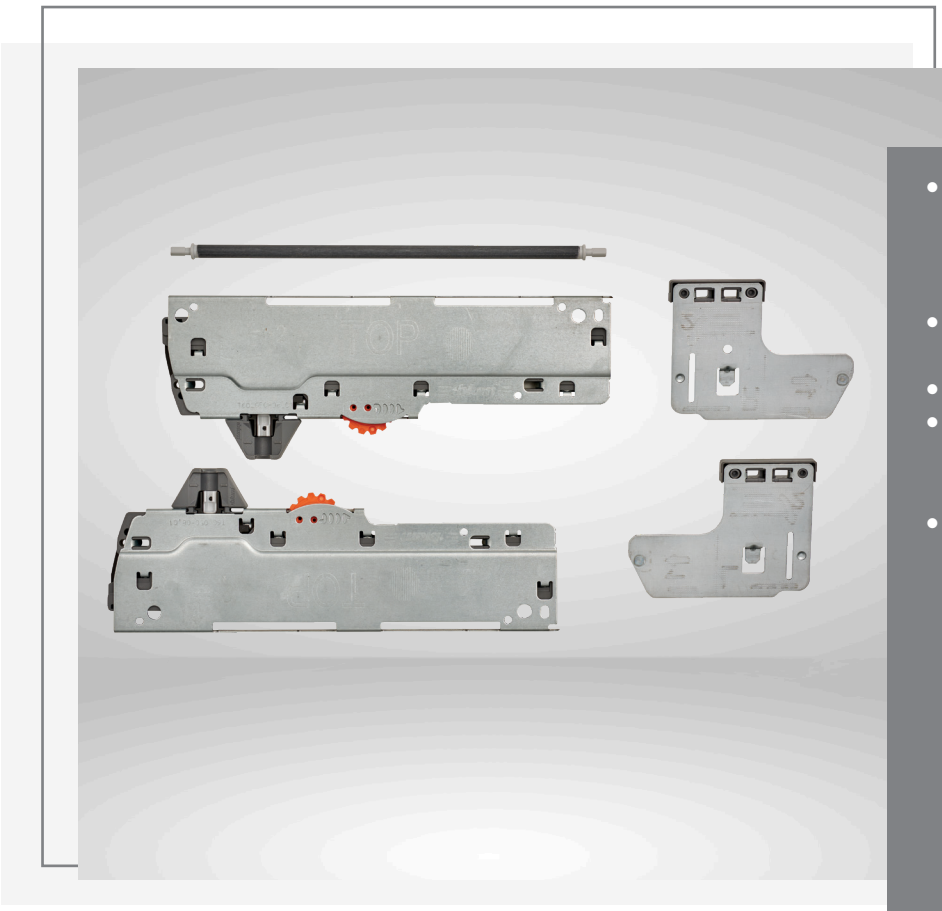

4WC-TOKIT-18

- Designed for all standard depth waste containers, 4WCSC Series and 5LB LEGRABOX Series
- 4-dimensional adjustment ensures precise gap layout
- Open with a touch of a finger
- Adjustment wheel allows a tool-free integrated depth adjustment
- Front gap of just 2.5 mm

PRODUCT	DESCRIPTION	DIMS	CAB	SLP
MOVENTO TIP-ON Kit for 4WCSC Series				
4WC-TOKIT-12	12" 4WCSC TIP-ON Kit	3-1/2" (89 mm) W x 9" (229 mm) D x 1-3/4" (45 mm) H	B12	$75.99
4WC-TOKIT-15	15" 4WCSC TIP-ON Kit	3-1/2" (89 mm) W x 9" (229 mm) D x 1-3/4" (45 mm) H	B18	$78.99
4WC-TOKIT-18	18" 4WCSC TIP-ON Kit	3-1/2" (89 mm) W x 9" (229 mm) D x 1-3/4" (45 mm) H	B21	$81.99
LEGRAOBOX TIP-ON Kit for 5LB Series				
5LB-TOKIT-12	12" LEGRABOX TIP-ON Kit	3-1/2" (89 mm) W x 9" (229 mm) D x 1-3/4" (45 mm) H	B15	$76.99
5LB-TOKIT-15	15" LEGRABOX TIP-ON Kit	3-1/2" (89 mm) W x 9" (229 mm) D x 1-3/4" (45 mm) H	B18	$81.99
5LB-TOKIT-18	18" LEGRABOX TIP-ON Kit	3-1/2" (89 mm) W x 9" (229 mm) D x 1-3/4" (45 mm) H	B21	$84.99

5LB Series

LEGRABOX Bottom Mount



5LB-1835OGMP-213

NEW SIZES!

blum

- Designed for frameless 12", 15", 18" and 24" base cabinets with 3/4" side panels
- Single 30, 32, 35 and 50 qt. and double 35 and 50 qt. polymer containers, black or orion gray with (1) matching lid
- 5LB-2435OGWN-413 comes with double 35 qt. waste containers with (1) lid and (2) 8 L waste containers with (2) 8 L waste containers, (2) 8 L lids (one white and one green)
- LEGRABOX frame, orion gray or stainless-steel (9-1/2" F height)
- BLUM soft-close slides
- Top divider secures container(s), natural maple with semi-gloss finish, walnut with satin finish or painted black MDF
- Fully assembled, just add your door front
- Mounts to cabinet door and side walls
- Includes LEGRABOX door-mount brackets
- TIP-ON or SERVO-DRIVE systems available (sold separately)
- TSCA Title VI compliant

**Lid not available for 30 qt.*

Scan for video

NOTE: Depending on cabinet construction and pull hardware, a lid on the rear waste container may not fully function. See pg. 68 for replacement containers and pg. 70 for lids.

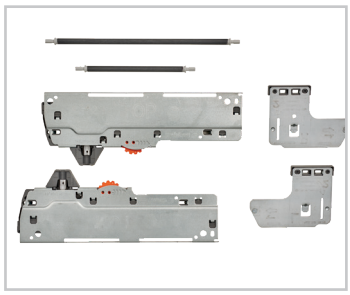

TIP-ON Kit available

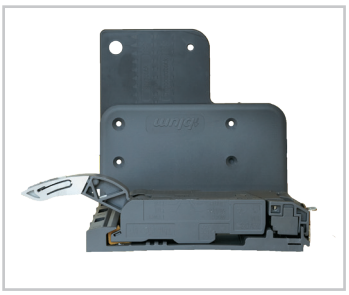

SERVO-DRIVE available



5LB-1230SSBL-118
Single 30 qt. Waste Container
(Stainless-steel and Black finish shown)



5LB-1550OGMP-113
Single 50 qt. Waste Container
(Orion gray and Maple finish shown)



5LB-1850OGWN-213
Double 50 qt. Waste Container
(Orion gray and Walnut finish shown)



5LB-2435OGWN-413
Double 35 qt & 8 L Waste Container
(Orion gray and Walnut finish shown)

LEGRABOX Bottom Mount Waste Container Pullouts w/ Soft-Close

PRODUCT	DESCRIPTION	DIMS	MCO	CAB	FINISH	SLP
5LB-1230SSBL-118	Single 30 qt.	10-1/2" (267 mm) W x 21-23/32" (552 mm) D x 19-19/32" (498 mm) H	10-1/2" (267 mm)	FLB12	Stainless-Steel/ Black	$739.99
5LB-1232OGMP-113	Single 32 qt.	10-1/2" (267 mm) W x 21-23/32" (552 mm) D x 19-19/32" (498 mm) H	10-1/2" (267 mm)	FLB12	Orion Gray/ Maple	$649.99
5LB-1232OGWN-113	Single 32 qt.	10-1/2" (267 mm) W x 21-23/32" (552 mm) D x 19-19/32" (498 mm) H	10-1/2" (267 mm)	FLB12	Orion Gray/ Walnut	$708.99
5LB-1232SSBL-118	Single 32 qt.	10-1/2" (267 mm) W x 21-23/32" (552 mm) D x 19-19/32" (498 mm) H	10-1/2" (267 mm)	FLB12	Stainless-Steel/ Black	$739.99
5LB-1535OGMP-113	Single 35 qt.	13-1/2" (343 mm) W x 21-23/32" (552 mm) D x 20-11/32" (517 mm) H	13-1/2" (343 mm)	FLB15	Orion Gray/ Maple	$649.99
5LB-1535OGWN-113	Single 35 qt.	13-1/2" (343 mm) W x 21-23/32" (552 mm) D x 20-11/32" (517 mm) H	13-1/2" (343 mm)	FLB15	Orion Gray/ Walnut	$708.99
5LB-1535SSBL-118	Single 35 qt.	13-1/2" (343 mm) W x 21-23/32" (552 mm) D x 20-11/32" (517 mm) H	13-1/2" (343 mm)	FLB15	Stainless-Steel/ Black	$769.99
5LB-1550OGMP-113	Single 50 qt.	13-1/2" (343 mm) W x 21-23/32" (552 mm) D x 24-1/4" (616 mm) H	13-1/2" (343 mm)	FLFHB15	Orion Gray/ Maple	$618.99
5LB-1550OGWN-113	Single 50 qt.	13-1/2" (343 mm) W x 21-23/32" (552 mm) D x 24-1/4" (616 mm) H	13-1/2" (343 mm)	FLFHB15	Orion Gray/ Walnut	$649.99
5LB-1550SSBL-118	Single 50 qt.	13-1/2" (343 mm) W x 21-23/32" (552 mm) D x 24-1/4" (616 mm) H	13-1/2" (343 mm)	FLFHB15	Stainless-Steel/ Black	$739.99
5LB-1835OGMP-213	Double 35 qt.	16-1/2" (420 mm) W x 21-23/32" (552 mm) D x 20-11/32" (517 mm) H	16-1/2" (419 mm)	FLB18	Orion Gray/ Maple	$604.99
5LB-1835OGWN-213	Double 35 qt.	16-1/2" (420 mm) W x 21-23/32" (552 mm) D x 20-11/32" (517 mm) H	16-1/2" (419 mm)	FLB18	Orion Gray/ Walnut	$663.99
5LB-1835SSBL-218	Double 35 qt.	16-1/2" (420 mm) W x 21-23/32" (552 mm) D x 20-11/32" (517 mm) H	16-1/2" (419 mm)	FLB18	Stainless-Steel/ Black	$769.99
5LB-1850OGMP-213	Double 50 qt.	16-1/2" (420 mm) W x 21-23/32" (552 mm) D x 24-1/4" (616 mm) H	16-1/2" (419 mm)	FLFHB18	Orion Gray/ Maple	$618.99
5LB-1850OGWN-213	Double 50 qt.	16-1/2" (420 mm) W x 21-23/32" (552 mm) D x 24-1/4" (616 mm) H	16-1/2" (419 mm)	FLFHB18	Orion Gray/ Walnut	$694.99
5LB-1850SSBL-218	Double 50 qt.	16-1/2" (420 mm) W x 21-23/32" (552 mm) D x 24-1/4" (616 mm) H	16-1/2" (419 mm)	FLFHB18	Stainless-Steel/ Black	$783.99
5LB-2435OGWN-413	Dbl 35 qt. & Dbl 8 L	22-1/2" (572 mm) W x 21-23/32" (552 mm) D x 20-11/32" (517 mm) H	22-1/2" (572 mm)	FLB24	Orion Gray/ Walnut	$862.99

LEGRABOX TIP-ON Kit for Frameless

5LB-TOKIT-12	Kit for FLB12"	3-1/2" (89 mm) W x 9" (229 mm) D x 1-3/4" (45 mm) H	$76.99
5LB-TOKIT-15	Kit for FLB15"	3-1/2" (89 mm) W x 9" (229 mm) D x 1-3/4" (45 mm) H	$81.99
5LB-TOKIT-18	Kit for FLB18"	3-1/2" (89 mm) W x 9" (229 mm) D x 1-3/4" (45 mm) H	$84.99

LEGRABOX SERVO-DRIVE Kit

5LBSD-KIT-1	SERVO-DRIVE Kit for 5LB	$638.99

** Lid not available for 30 qt.*

5149 Series

Aluminum Bottom-Mount Rev-A-Motion®



- Designed for 15", 18" and 21" base cabinets
- Single 35 and 50 qt. and double 27, 35 and 50 qt. polymer containers, metallic silver or white
- Patented anodized aluminum frame, metallic silver or white base (US Patent No. 9,049,930)
- Rev-A-Motion® soft-open/ soft-close assist (US Patent No. 8,091,971)
- Rear storage with all single units
- Mounts to cabinet door and floor
- Patented door-mount brackets with 5" of adjustability (US Patent No. 8,939,526)
- 27, 35 and 50 qt. polymer lids available (sold separately)

NOTE: Depending on cabinet construction and pull hardware, a lid on the rear waste container may not fully function. See pg. 68 for replacement containers and pg. 70 for lids.



5149-1527DM-211
Double 27 qt. Waste Container
(White/Aluminum finish shown)



5149-15DM18-117
Single 35 qt. Reduced Depth
Waste Container
(White/Aluminum finish shown)



Patented door-mount brackets
(US Patent No. 8,939,526)



5149-2150DM-211
Double 50 qt. Waste Container
(White/Aluminum finish shown)

* Reduced depth

Aluminum Bottom Mount Rev-A-Motion® Waste Container Pullouts

	PRODUCT	DESCRIPTION	DIMS	MCOFL	MCOFF	CAB	FINISH	SLP
	5149-15DM-111	Single 35 qt.	12-1/8" (309 mm) W x 22" (559 mm) D x 19-1/2" (496 mm) H	12-1/4" (311 mm)	11-1/2" (292 mm)	B15	White/Alum	$424.99
	5149-15DM-117	Single 35 qt.	12-1/8" (309 mm) W x 22" (559 mm) D x 19-1/2" (496 mm) H	12-1/4" (311 mm)	11-1/2" (292 mm)	B15	Silver/Alum	$424.99
*	5149-15DM18-111	Single 35 qt.	12-1/8" (309 mm) W x 16" (407 mm) D x 19-1/2" (496 mm) H	12-1/4" (311 mm)	11-1/2" (292 mm)	B15	White/Alum	$420.99
*	5149-15DM18-117	Single 35 qt.	12-1/8" (309 mm) W x 16" (407 mm) D x 19-1/2" (496 mm) H	12-1/4" (311 mm)	11-1/2" (292 mm)	B15	Silver/Alum	$420.99
	5149-1550DM-111	Single 50 qt.	12-1/8" (309 mm) W x 22" (559 mm) D x 23-1/2" (597 mm) H	12-1/4" (311 mm)	11-1/2" (292 mm)	FHB15	White/Alum	$443.99
	5149-1550DM-117	Single 50 qt.	12-1/8" (309 mm) W x 22" (559 mm) D x 23-1/2" (597 mm) H	12-1/4" (311 mm)	11-1/2" (292 mm)	FHB15	Silver/Alum	$443.99
	5149-1527DM-217	Double 27 qt.	12-1/8" (309 mm) W x 22" (559 mm) D x 19-13/16" (504 mm) H	12-1/4" (311 mm)	11-1/2" (292 mm)	B15	Silver/Alum	$443.99
	5149-18DM-211	Double 35 qt.	14-9/32" (363 mm) W x 22" (559 mm) D x 19-1/2" (496 mm) H	14-1/2" (368 mm)	14-1/2" (368 mm)	B18	White/Alum	$444.99
	5149-18DM-217	Double 35 qt.	14-9/32" (363 mm) W x 22" (559 mm) D x 19-1/2" (496 mm) H	14-1/2" (368 mm)	14-1/2" (368 mm)	B18	Silver/Alum	$443.99
	5149-2150DM-211	Double 50 qt.	15-19/32" (396 mm) W x 22" (559 mm) D x 23-1/2" (597 mm) H	15-3/4" (400 mm)	15-3/4" (400 mm)	FHB21	White/Alum	$463.99
	5149-2150DM-217	Double 50 qt.	15-19/32" (396 mm) W x 22" (559 mm) D x 23-1/2" (597 mm) H	15-3/4" (400 mm)	15-3/4" (400 mm)	FHB21	Silver/Alum	$462.99

5349 Series

Aluminum Bottom Mount



5349-18DM-217

- Designed for 15" and 18" base cabinets
- Single 35 and 50 qt. and double 27, 35 and 50 qt. polymer containers, black, metallic silver or white
- 10" high door-mountable aluminum frame
- Soft-close slides
- Rear storage with all single units
- Mounts to cabinet door and floor
- Built-in door-mount brackets
- 27, 35 and 50 qt. polymer lids available (sold separately)

Door-Mount Extension Bracket

- Designed for our 5349 Aluminum Bottom Mount Series
- Extension brackets attach to the existing door brackets
- Eliminates need for a sub door
- Allow adjustment from 3/4" - 2-1/2" per side

NOTE: Depending on cabinet construction and pull hardware, a lid on the rear waste container may not fully function. See pg. 68 for replacement containers and pg. 70 for lids.



5349-15DM-1
Single 35 qt. Waste Container
(White/Aluminum finish shown)



5349-1527DM-217
Double 27 qt. Waste Container
(Metallic Silver/Aluminum finish shown)



5349-1550DM-117
Single 50 qt. Waste Container
(Silver/Aluminum finish shown)



HOLE SPREAD DIMENSIONS

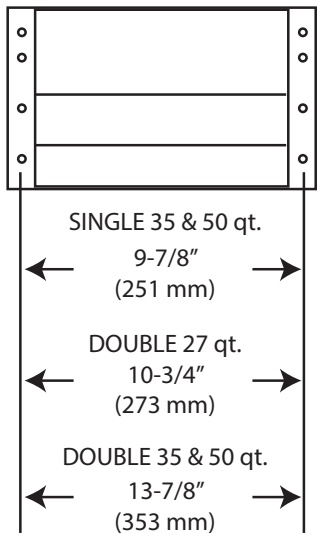

* Reduced depth

Aluminum Bottom Mount Waste Container Pullouts w/ Soft-Close

	PRODUCT	DESCRIPTION	DIMS	MCO	CAB	FINISH	SLP
	5349-15DM-1	Single 35 qt.	10-3/4″ (274 mm) W x 21-7/8″ (557 mm) D x 19-1/32″ (484 mm) H	11″ (279 mm)	B15	White/Alum	$453.99
*	5349-15DM18-1	Single 35 qt.	10-3/4″ (274 mm) W x 18″ (458 mm) D x 19-1/32″ (484 mm) H	11″ (279 mm)	B15	White/Alum	$439.99
*	5349-15DM18-118	Single 35 qt.	10-3/4″ (274 mm) W x 18″ (458 mm) D x 19-1/32″ (484 mm) H	11″ (279 mm)	B15	Black/Alum	$439.99
	5349-15DM-117	Single 35 qt.	10-3/4″ (274 mm) W x 21-7/8″ (557 mm) D x 19-1/32″ (484 mm) H	11″ (279 mm)	B15	Silver/Alum	$453.99
	5349-15DM-118	Single 35 qt.	10-3/4″ (274 mm) W x 21-7/8″ (557 mm) D x 19-1/32″ (484 mm) H	11″ (279 mm)	B15	Black/Alum	$453.99
	5349-15DM18-117	Single 35 qt.	10-3/4″ (274 mm) W x 18″ (458 mm) D x 19-1/32″ (484 mm) H	11″ (279 mm)	B15	Silver/Alum	$439.99
	5349-1550DM-1	Single 50 qt.	10-3/4″ (274 mm) W x 21-7/8″ (557 mm) D x 22-29/32″ (583 mm) H	11″ (279 mm)	FHB15	White/Alum	$488.99
	5349-1550DM-117	Single 50 qt.	10-3/4″ (274 mm) W x 21-7/8″ (557 mm) D x 22-29/32″ (583 mm) H	11″ (279 mm)	FHB15	Silver/Alum	$488.99
	5349-1550DM-118	Single 50 qt.	10-3/4″ (274 mm) W x 21-15/16″ (558 mm) D x 23-1/8″ (588 mm) H	11″ (279 mm)	FHB15	Black/Alum	$487.99
	5349-1527DM-2	Double 27 qt.	11-21/32″ (297 mm) W x 22-3/32″ (562 mm) D x 18-29/32″ (481 mm) H	12″ (305 mm)	B15	White/Alum	$493.99
	5349-1527DM-217	Double 27 qt.	11-21/32″ (297 mm) W x 22-3/32″ (562 mm) D x 18-29/32″ (481 mm) H	12″ (305 mm)	B15	Silver/Alum	$493.99
	5349-1527DM-218	Double 27 qt.	11-21/32″ (297 mm) W x 22-3/32″ (562 mm) D x 18-29/32″ (481 mm) H	12″ (305 mm)	B15	Black/Alum	$493.99
	5349-18DM-2	Double 35 qt.	14-25/32″ (376 mm) W x 22-3/32″ (562 mm) D x 19-1/32″ (484 mm) H	15″ (381 mm)	B18	White/Alum	$501.99
	5349-18DM-217	Double 35 qt.	14-25/32″ (376 mm) W x 22-3/32″ (562 mm) D x 19-1/32″ (484 mm) H	15″ (381 mm)	B18	Silver/Alum	$501.99
	5349-18DM-218	Double 35 qt.	14-25/32″ (376 mm) W x 22-3/32″ (562 mm) D x 19-1/32″ (484 mm) H	15″ (381 mm)	B18	Black/Alum	$501.99
	5349-2150DM-2	Double 50 qt.	14-25/32″ (376 mm) W x 22-3/32″ (562 mm) D x 22-29/32″ (583 mm) H	15″ (381 mm)	FHB18	White/Alum	$537.99
	5349-2150DM-217	Double 50 qt.	14-25/32″ (376 mm) W x 22-3/32″ (562 mm) D x 22-29/32″ (583 mm) H	15″ (381 mm)	FHB18	Silver/Alum	$537.99
	5349-2150DM-218	Double 50 qt.	14-25/32″ (376 mm) W x 22-3/32″ (562 mm) D x 22-29/32″ (583 mm) H	15″ (381 mm)	FHB18	Black/Alum	$537.99
	Accessories						
	5345-DM-KIT-1	Door-Mount Extension Brackets				Chrome	$41.99

53WC Series

Steel Bottom Mount



53WC-2150SCDM-218

NEW FINISH!

Soft Close

- Designed for 15" and 18" base cabinets
- Single 35 and 50 qt. and double 27, 35 and 50 qt. polymer containers, available in black, orion gray or metallic silver
- Soft-close slides
- Powder-coated wire frame
- Mounts to cabinet floor
- Pre-assembled door-mount brackets
- Rear storage bin with all single units
- 27, 35 and 50 qt. polymer lids available (sold separately)

NOTE: Depending on cabinet construction and pull hardware, a lid on the rear waste container may not fully function. See pg. 68 for replacement containers and pg. 70 for lids.



Full-extension soft-close slides



Pre-assembled door-mount brackets



53WC-1550SCDM-117
Single 50 qt. Waste Container
(Metallic Silver finish shown)



53WC-1527SCDM-213
Double 27 qt. Waste Container
(Orion Gray finish shown)



53WC-2150SCDM-217
Double 50 qt. Waste Container
(Metallic Silver finish shown)

Steel Bottom Mount Waste Container Pullouts w/ Soft-Close Slides

PRODUCT	DESCRIPTION	DIMS	MCO	CAB	FINISH	SLP
53WC-1535SCDM-113	Single 35 qt.	11" (280 mm) W x 22-3/32" (562 mm) D x 19" (483 mm) H	11-1/2" (292 mm)	B15	Orion Gray	$306.99
53WC-1535SCDM-117	Single 35 qt.	11" (280 mm) W x 22-3/32" (562 mm) D x 19" (483 mm) H	11-1/2" (292 mm)	B15	Metallic Silver	$306.99
53WC-1535SCDM-118	Single 35 qt.	11" (280 mm) W x 22-1/4" (566 mm) D x 19" (483 mm) H	11-1/2" (292 mm)	B15	Black	$309.99
53WC-1550SCDM-113	Single 50 qt.	11" (280 mm) W x 22-3/32" (562 mm) D x 22-29/32" (582 mm) H	11-1/2" (292 mm)	FHB15	Orion Gray	$309.99
53WC-1550SCDM-117	Single 50 qt.	11" (280 mm) W x 22-3/32" (562 mm) D x 22-29/32" (582 mm) H	11-1/2" (292 mm)	FHB15	Metallic Silver	$309.99
53WC-1550SCDM-118	Single 50 qt.	11" (280 mm) W x 22-1/4" (566 mm) D x 22-7/8" (582 mm) H	11-1/2" (292 mm)	FHB15	Black	$309.99
53WC-1527SCDM-213	Double 27 qt.	11" (280 mm) W x 22-3/32" (562 mm) D x 18-15/16" (482 mm) H	11-1/2" (292 mm)	B15	Orion Gray	$312.99
53WC-1527SCDM-217	Double 27 qt.	11" (280 mm) W x 22-3/32" (562 mm) D x 18-15/16" (482 mm) H	11-1/2" (292 mm)	B15	Metallic Silver	$312.99
53WC-1527SCDM-218	Double 27 qt.	11" (280 mm) W x 22-3/32" (562 mm) D x 18-15/16" (482 mm) H	11-1/2" (292 mm)	B15	Black	$312.99
53WC-1835SCDM-213	Double 35 qt.	14-13/32" (367 mm) W x 22-3/32" (562 mm) D x 19" (483 mm) H	14-1/2" (368 mm)	B18	Orion Gray	$309.99
53WC-1835SCDM-217	Double 35 qt.	14-13/32" (367 mm) W x 22-3/32" (562 mm) D x 19" (483 mm) H	14-1/2" (368 mm)	B18	Metallic Silver	$309.99
53WC-1835SCDM-218	Double 35 qt.	14-13/32" (367 mm) W x 22-1/4" (566 mm) D x 19" (483 mm) H	14-1/2" (368 mm)	B18	Black	$309.99
53WC-2150SCDM-213	Double 50 qt.	14-3/4" (375 mm) W x 22-3/32" (562 mm) D x 22-29/32" (582 mm) H	15" (381 mm)	FHB18	Orion Gray	$315.99
53WC-2150SCDM-217	Double 50 qt.	14-3/4" (375 mm) W x 22-3/32" (562 mm) D x 22-29/32" (582 mm) H	15" (381 mm)	FHB18	Metallic Silver	$315.99
53WC-2150SCDM-218	Double 50 qt.	14-3/4" (375 mm) W x 22-1/4" (566 mm) D x 22-7/8" (582 mm) H	15" (381 mm)	FHB18	Black	$315.99

53TM Series

Steel Top Mount



53TM-24GSCDM4-FL

- Designed for frameless 18″ and 24″ base cabinets with 5/8″ or 3/4″ side walls
- (4) configurations available:
  - Double 35 qt. polymer containers, metallic silver
  - Double 50 qt. polymer containers, metallic silver
  - Double 35 qt. and double 8 L polymer containers, metallic silver
  - Single 35 qt. and double 8 L polymer containers, metallic silver
- Powder-coated metal frame, metallic silver
- Soft-close slides
- Mounts to cabinet door and side walls
- Pre-assembled door-mount brackets
- Built-in metal lid
- (1) green and (1) white 8 L lids

Scan for video



53TM-24GSCDM4-FL
Double 35 qt. and Double 8 L Waste Container



53TM-1850GSCDM2-FL
Double 50 qt. Waste Container



Built-in metal lid

Frameless Steel Top Mount Waste and Recycle Center Pullout w/ Soft-Close

PRODUCT	DESCRIPTION	DIMS	MCO	CAB	FIN-ISH	SLP
53TM-1835GSCDM2-FL	Double 35 qt.	16-7/32 - 16-27/32″ (412 - 428 mm) W x 21-21/32″ (550 mm) D x 18-13/16″ (478 mm) H	16-7/32″ (412 mm)	FLB18	Steel	$491.99
53TM-1850GSCDM2-FL	Double 50 qt.	16-7/32 - 16-27/32″ (412 - 428 mm) W x 21-21/32″ (550 mm) D x 22-19/32″ (574 mm) H	16-7/32″ (412 mm)	FLFHB18	Steel	$499.99
53TM-18GSCDM3-FL	Sgl. 35 qt. and Dbl. 8 L	16-7/32 - 16-27/32″ (412 - 428 mm) W x 21-21/32″ (550 mm) D x 18-13/16″ (478 mm) H	16-7/32″ (412 mm)	FLB18	Steel	$486.99
53TM-24GSCDM4-FL	Dbl. 35 qt. and Dbl. 8 L	22-1/8 - 22-3/4″ (563 - 579 mm) W x 21-21/32″ (550 mm) D x 18-13/16″ (478 mm) H	22-1/8″ (562 mm)	FLFHB24	Steel	$520.99

Recycle Center

5BBSC Series



5BBSC-WMDM24-C

- Designed for 24" base cabinets
- (1) machine-washable canvas bag and (3) 25 qt. polymer bins, available in all white or (1) yellow, green and blue each
- Chrome wire frame
- Soft-close slides
- Mounts to cabinet floor
- Built-in door-mount brackets



5BBSC-WMDM24-W
Triple 25 qt. w/ (1) Canvas Liner
(White finish shown)



5BBSC-WMDM24-C
Triple 25 qt. w/ (1) Canvas Liner
(Multi-color finish shown)

Recycle Center Bottom Mount Pullout w/ Soft-Close

PRODUCT	DESCRIPTION	DIMS	MCO	CAB	FINISH	SLP
5BBSC-WMDM24-C	Triple 25 qt. w/ (1) Canvas Liner	20" (508 mm) W x 22-1/8" (562 mm) D x 20-1/8" (512 mm) H	20-1/4" (514 mm) - FF 20-1/4" (514 mm) - FL	B24	Multi/Chrome	$454.99
5BBSC-WMDM24-W	Triple 25 qt. w/ (1) Canvas Liner	20" (508 mm) W x 22-1/8" (562 mm) D x 20-1/8" (512 mm) H	20-1/4" (514 mm) - FF 20-1/4" (514 mm) - FL	B24	White/Chrome	$454.99

4WC Series

Maple Bottom Mount

NEW SIZES!



4WC-2432DM2-SC

- Designed for 15", 18" and 24" base cabinets
- Single 35 qt. and double 32 and 35 qt. polymer containers, metallic silver or white
- Natural maple dovetail construction with a semi-gloss finish
- (2) slide configurations available:
  - Ball-bearing slides
  - BLUM MOVENTO soft-close slides
- Rear storage with single 35 qt. and double 32 qt. units
- Mounts to cabinet door and floor
- Pre-assembled door-mount brackets
- 35 and 50 qt. polymer lids available (sold separately)
- TSCA Title VI compliant

NOTE: Depending on cabinet construction and pull hardware, a lid on the rear waste container may not fully function. See pg. 68 for replacement containers and pg. 70 for lids.



4WC-15DM1
Single 35 qt. Waste Container
(White/Maple shown)



4WC-18DM2
Double 35 qt. Waste Container
(White/Maple shown)

Maple Bottom Mount Waste Container Pullouts w/ BLUM Soft-Close

PRODUCT	DESCRIPTION	DIMS	MCO	CAB	FINISH	SLP
4WC-2432DM2-SC	Double 32 qt.	20-31/32" (533 mm) W x 22-1/4" (566 mm) D x 20-1/4" (515 mm) H	21" (533 mm) - FL	B24	Silver/Maple	$583.99
Maple Bottom Mount Waste Container Pullouts w/ Ball-Bearing Slides						
4WC-15DM1	Single 35 qt.	11-1/4" (286 mm) W x 21-21/32" (550 mm) D x 19-1/4" (489 mm) H	11-1/2" (292 mm) - FF 11-1/2" (292 mm) - FL	B15	White/Maple	$351.99
4WC-18DM2	Double 35 qt.	14-1/4" (362 mm) W x 21-21/32" (550 mm) D x 19-1/4" (489 mm) H	14-1/2" (368 mm) - FF 14-1/2" (368 mm) - FL	B18	White/Maple	$367.99

Walnut Bottom Mount

4WC-WN Series



4WC-WN-18DM2-SC

- Designed for 15", 18" and 21" base cabinets
- Single and double 35 and 50 qt. polymer containers, orion gray
- Walnut dovetail frame with a satin finish (7-1/2" frame height)
- BLUM MOVENTO soft-close slides
- Rear storage with all single units
- Mounts to cabinet door and floor
- Pre-assembled door-mount brackets
- (1) matching lid
- TIP-ON technology available (sold separately)
- TSCA Title VI compliant



4WC-WN-15DM1-SC
Single 35 qt. Waste Container



Walnut dovetail construction



Pre-assembled door-mount brackets

NOTE: Single 35 and 50 qt. face frame minimum opening is less than the product width. Single unit hardware extends past bottom mount bracket. Depending on cabinet construction and pull hardware, a lid on the rear waste container may not fully function. See pg. 68 for replacement containers and pg. 70 for lids.

Walnut Bottom Mount MOVENTO Waste Container Pullouts w/ Soft-Close and (1) Lid

PRODUCT	DESCRIPTION	DIMS	MCO	CAB	FINISH	SLP
4WC-WN-15DM1-SC	Single 35 qt.	12" (305 mm) W x 22-3/16" (564 mm) D x 19-7/16" (494 mm) H	12" (305 mm)	B15	Orion Gray/Walnut	$675.99
4WC-WN-1550DM1-SC	Single 50 qt.	12" (305 mm) W x 22-3/16" (564 mm) D x 23-3/8" (594 mm) H	12" (305 mm)	FHB15	Orion Gray/Walnut	$705.99
4WC-WN-18DM2-SC	Double 35 qt.	15" (381 mm) W x 22-3/16" (564 mm) D x 19-7/16" (494 mm) H	15" (381 mm)	B18	Orion Gray/Walnut	$718.99
4WC-WN-2150DM2-SC	Double 50 qt.	16" (407 mm) W x 22-3/16" (564 mm) D x 23-3/8" (594 mm) H	18" (457 mm)	FHB21	Orion Gray/Walnut	$750.99
TIP-ON Kit						
4WC-TOKIT-12	12" TIP-ON Kit	3-1/2" (89 mm) W x 9" (229 mm) D x 1-3/4" (45 mm) H		B15		$75.99
4WC-TOKIT-15	15" TIP-ON Kit	3-1/2" (89 mm) W x 9" (229 mm) D x 1-3/4" (45 mm) H		B18		$78.99
4WC-TOKIT-18	18" TIP-ON Kit	3-1/2" (89 mm) W x 9" (229 mm) D x 1-3/4" (45 mm) H		B21		$81.99

4WCBM Series

Maple Bottom Mount w/ Rev-A-Motion®



4WCBM-2432DM-2

NEW SIZES!

- Designed for 15", 18", 21" and 24" base cabinets
- Single 35 and 50 qt. and double 32, 35 and 50 qt. polymer containers, metallic silver
- Natural maple dovetail frame with a semi-gloss finish (7-1/2" frame height)
- Rev-A-Motion® soft-open/soft-close assist (US Patent No. 8,091,971)
- Rear storage with all single and double 32 qt. units
- Mounts to cabinet door and floor
- Pre-assembled door-mount brackets
- 35 and 50 qt. polymer lids available (sold separately)
- TSCA Title VI compliant

REV-A-MOTION SOFT OPEN SOFT CLOSE

NOTE: Single 35 and 50 qt. face frame minimum opening is less than the product width. Single unit hardware extends past bottom mount bracket. Depending on cabinet construction and pull hardware, a lid on the rear waste container may not fully function. See pg. 68 for replacement containers and pg. 70 for lids.



4WCBM-15DM-1
Single 35 qt. Waste Container
(Silver/Maple finish shown)



4WCBM-1550DM-1
Single 50 qt. Waste Container
(Silver/Maple finish shown)



4WCBM-2432DM-2
Double 32 qt. Waste Container
(Silver/Maple finish shown)



4WCBM-2150DM-2
Double 50 qt. Waste Container
(Silver/Maple finish shown)



Fully concealed undermount design

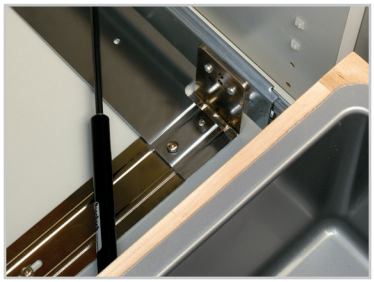

Rev-A-Motion® soft-close piston



Maple dovetail construction

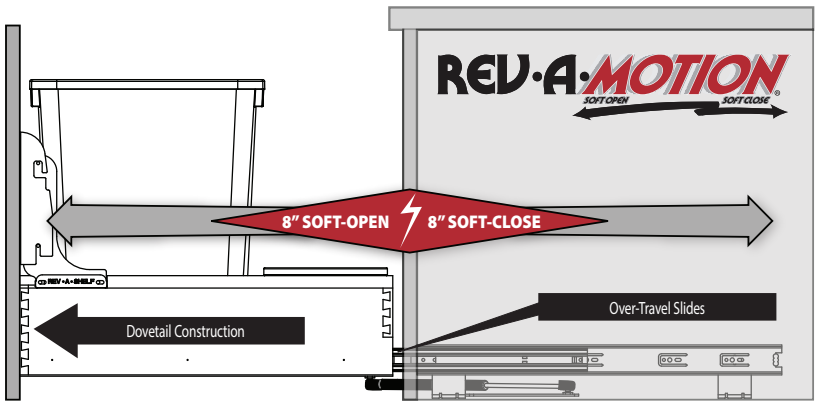

Maple Bottom Mount Waste Container Pullouts w/ Rev-A-Motion® Soft-Close

PRODUCT	DESCRIPTION	DIMS	MCOFL	MCOFF	CAB	FINISH	SLP
4WCBM-15DM-1	Single 35 qt.	12" (305 mm) W x 21-3/4" (553 mm) D x 19-1/4" (489 mm) H	12-3/4" (324 mm)	11-1/2" (293 mm)	B15	Silver/Maple	$522.99
4WCBM-1550DM-1	Single 50 qt.	12" (305 mm) W x 21-3/4" (553 mm) D x 23-3/16" (590 mm) H	12-3/4" (324 mm)	11-1/2" (293 mm)	FHB15	Silver/Maple	$530.99
4WCBM-2432DM-2	Double 32 qt.	20-1/4" (515 mm) W x 21-3/4" (553 mm) D x 19-13/32" (493 mm) H	20-1/2" (520 mm)	20-1/2" (520 mm)	B24	Silver/Maple	$644.99
4WCBM-18DM-2	Double 35 qt.	14-1/4" (362 mm) W x 21-3/4" (553 mm) D x 19-1/4" (489 mm) H	14-1/2" (368 mm)	14-1/2" (368 mm)	B18	Silver/Maple	$538.99
4WCBM-1850DM-2	Double 50 qt.	14-1/4" (362 mm) W x 21-21/32" (550 mm) D x 23-5/32" (589 mm) H	14-1/2" (368 mm)	14-1/2" (368 mm)	FHB18	Silver/Maple	$554.99
4WCBM-2150DM-2	Double 50 qt.	17-1/4" (439 mm) W x 21-3/4" (553 mm) D x 23-3/16" (590 mm) H	17-1/2" (445 mm)	17-1/2" (445 mm)	FHB21	Silver/Maple	$595.99

4WCSC/D Series

Maple Bottom Mount



4WCSC-2432DM-2

NEW SIZES!

blum

- Designed for 15", 18", 21" and 24" base cabinets
- Single 32, 35 and 50 qt. and double 27, 32, 35 and 50 qt. polymer containers, gray (32 qt. only) or metallic silver
- Natural maple dovetail frame with a semi-gloss finish
- BLUM MOVENTO soft-close slides
- Rear storage with all single 35 and 50 qt. units
- Mounts to cabinet door and floor
- Patented door-mount brackets with 5" of adjustability and micro-trim adjuster (US Patent No. 8,388,076)
- Available with BLUM SERVO-DRIVE technology, uses standard 110V wall socket
- TIP-ON technology available (sold separately)
- 27, 32, 35 and 50 qt. polymer lids available (sold separately)
- TSCA Title VI compliant

TOOL FREE ADJUSTMENT! ALSO AVAILABLE WITH TIP-ON OR SERVO-DRIVE TECHNOLOGY



Height adjustment-max 1/8" lift



Side-to-side adjustment-max-1/16"

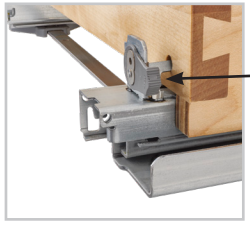

Tilt/skew adjustment for top of door



Curved design hugs the waste bin keeping it securely in place

NOTE: Depending on cabinet construction and pull hardware, a lid on the rear waste container may not fully function. See pg. 68 for replacement containers and pg. 70 for lids.



4WCSC/D-1535DM-1
Single 35 qt. Waste Container
(Silver/Maple finish shown)



4WCSC-1535DM19-1
Single 35 qt. Waste Container, Reduced Depth
(Silver/Maple finish shown)



4WCSC-1532DM16-1
Single 32 qt. Waste Container, Reduced Depth
(Gray/Maple finish shown)

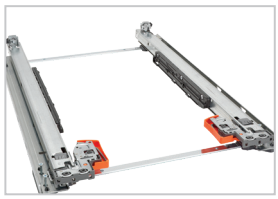

BLUM concealed soft-close slides



SERVO-DRIVE touch-to-open technology (sold separately)



4WCSC/D-1835DM-2
Double 35 qt. Waste Container
(Silver/Maple finish shown)

Maple Bottom Mount Waste Container Pullouts w/ BLUM Soft-Close

PRODUCT	DESCRIPTION	DIMS	MCO	CAB	FINISH	SLP
4WCSC-1532DM16-1	Single 32 qt. w/ TANDEM Slide	11-7/8" (302 mm) W x 15-21/32" (399 mm) D x 19-3/8" (493 mm) H	11-1/2" (292 mm) - FF 12" (305 mm) - FL	B15	Gray/Maple	$425.99
4WCSC-1535DM19-1	Single 35 qt. w/ TANDEM Slide	12" (305 mm) W x 18-21/32" (474 mm) D x 19-1/2" (496 mm) H	12" (305 mm)	B15	Silver/Maple	$462.99
4WCSC-1535DM-1	Single 35 qt.	12" (305 mm) W x 21-21/32" (551 mm) D x 19-1/2" (496 mm) H	12" (305 mm)	B15	Silver/Maple	$528.99
4WCSC-1550DM-1	Single 50 qt.	12" (305 mm) W x 21-3/4" (553 mm) D x 23-3/8" (594 mm) H	12" (305 mm)	FHB15	Silver/Maple	$560.99
4WCSC-1527DM-2	Double 27 qt.	12" (305 mm) W x 22-1/8" (563 mm) D x 19-11/32" (491 mm) H	12" (305 mm)	B15	Silver/Maple	$553.99
4WCSC-1835DM-2	Double 35 qt.	15" (381 mm) W x 22-1/32" (560 mm) D x 20-3/8" (518 mm) H	15" (381 mm)	B18	Silver/Maple	$575.99
4WCSC-1835DMND-2	Double 35 qt. for Inset	15" (381 mm) W x 22-1/32" (560 mm) D x 20-3/8" (518 mm) H	15" (381 mm)	B18	Silver/Maple	$562.99
4WCSC-1850DM-2	Double 50 qt.	15" (381 mm) W x 22-3/32" (562 mm) D x 24-7/32" (616 mm) H	18" (457 mm)	B18	Silver/Maple	$586.99
4WCSC-2135DM-2	Double 35 qt.	18" (458 mm) W x 22-1/32" (560 mm) D x 20-5/16" (517 mm) H	18" (457 mm)	B21	Silver/Maple	$604.99
4WCSC-2150DM-2	Double 50 qt.	18" (458 mm) W x 22-1/32" (560 mm) D x 24-1/4" (616 mm) H	18" (457 mm)	FHB21	Silver/Wood	$633.99
4WCSC-2432DM-2	Double 32 qt.	20-1/2" (521 mm) W x 22-1/32" (560 mm) D x 19-11/32" (491 mm) H	21" (534 mm)	B24	Silver/Maple	$643.99
Maple Bottom Mount Electric Assist Waste Container Pullouts w/ Soft-Close and SERVO-DRIVE						
4WCSD-1535DM-1	Single 35 qt.	12" (305 mm) W x 22-1/2" (572 mm) D x 19-1/2" (496 mm) H	12" (305 mm)	B15	Silver/Maple	$1290.99
4WCSD-1550DM-1	Single 50 qt.	12" (305 mm) W x 22-1/2" (572 mm) D x 23-3/8" (594 mm) H	12" (305 mm)	FHB15	Silver/Maple	$1271.99
4WCSD-1835DM-2	Double 35 qt.	15" (381 mm) W x 22-1/2" (572 mm) D x 20-3/8" (518 mm) H	15" (381 mm)	B18	Silver/Maple	$1345.99
4WCSD-2150DM-2	Double 50 qt.	18" (458 mm) W x 22-1/2" (572 mm) D x 24-1/4" (616 mm) H	18" (457 mm)	FHB21	Silver/Maple	$1366.99
Accessories						
4WC-TOKIT-12	12" TIP-ON Kit	3-1/2" (89 mm) W x 9" (229 mm) D x 1-3/4" (45 mm) H		B15		$75.99
4WC-TOKIT-15	15" TIP-ON Kit	3-1/2" (89 mm) W x 9" (229 mm) D x 1-3/4" (45 mm) H		B18		$78.99
4WC-TOKIT-18	18" TIP-ON Kit	3-1/2" (89 mm) W x 9" (229 mm) D x 1-3/4" (45 mm) H		B21		$81.99

4VLWCSC Series

Value Line Waste Container



4VLWCSC-1527DM-2

- Designed for 15", 18", 21" and 24" base cabinets
- Single 35 and 50 qt. and double 27, 32, 35 and 50 qt. polymer containers, white
- Dovetail construction box w/ semi-gloss finish
- Soft-close slides
- Rear storage with all single units
- Mounts to cabinet door and floor
- Patented door-mount brackets with 5" of adjustability and micro-trim adjuster (US Patent No. 8,388,076)
- Patented mounting straps (US Patent No. 9,756,941)
- 27, 32, 35 and 50 qt. polymer lids available (sold separately)
- TSCA Title VI compliant



Patented door-mount brackets with 5" of adjustability and micro-trim adjuster (US Patent No. 8,388,076)



Universal box fits both 35 and 50 qt. cans



Plywood construction w/ semi-gloss finish



4VLWCSC-1535DM-1
Single 35 qt. Waste Container
(White/Wood finish shown)



4VLWCSC-1835DM-2
Double 35 qt. Waste Container
(White/Wood finish shown)



4VLWCSC-1550DM-1
Single 50 qt. Waste Container
(White/Wood finish shown)



4VLWCSC-2150DM-2
Double 50 qt. Waste Container
(White/Wood finish shown)

PALLET PROGRAM

Our Value Line waste containers are available in pallet quantities.

- Volume pricing
- Reduced transportation cost
- Minimal storage space
- Enviromentally-conscious packaging



Value Line Bottom Mount Waste Container w/ Soft-Close

PRODUCT	DESCRIPTION	DIMS	MCO	CAB	FINISH	SLP
4VLWCSC-1535DM-1	Single 35 qt.	11-1/2" (293 mm) W x 21-1/2" (547 mm) D x 19-11/16" (501 mm) H	FF: 11-1/2" (292 mm) FL: 11-3/4" (298 mm)	B15	White/Wood	$309.99
4VLWCSC-1550DM-1	Single 50 qt.	11-1/2" (293 mm) W x 21-1/2" (547 mm) D x 23-19/32" (600 mm) H	FF: 11-1/2" (292 mm) FL: 11-3/4" (298 mm)	FHB15	White/Wood	$312.99
4VLWCSC-1527DM-2	Double 27 qt.	11-1/2" (293 mm) W x 21-1/2" (547 mm) D x 19-11/16" (501 mm) H	FF: 11-1/2" (293 mm) FL: 11-3/4" (299 mm)	B15	White/Wood	$309.99
4VLWCSC-2432DM-2	Double 32 qt.	20-1/2" (521 mm) W x 21-1/2" (547 mm) D x 19-17/32" (497 mm) H	FF: 20-1/2" (521 mm) FL: 20-3/4" (528 mm)	B24	White/Wood	$393.99
4VLWCSC-1835DM-2	Double 35 qt.	14-1/2" (369 mm) W x 21-1/2" (547 mm) D x 19-5/8" (499 mm) H	FF: 14-1/2" (368 mm) FL: 14-3/4" (375 mm)	B18	White/Wood	$331.99
4VLWCSC-1850DM-2	Double 50 qt.	14-1/2" (369 mm) W x 21-1/2" (547 mm) D x 23-17/32" (598 mm) H	FF: 14-1/2" (368 mm) FL: 14-3/4" (375 mm)	B18	White/Wood	$341.99
4VLWCSC-2135DM-2	Double 35 qt.	17-1/2" (445 mm) W x 21-17/32" (548 mm) D x 19-5/8" (499 mm) H	FF: 17-1/2" (445 mm) FL: 17-3/4" (451 mm)	B21	White/Wood	$376.99
4VLWCSC-2150DM-2	Double 50 qt.	17-1/2" (445 mm) W x 21-17/32" (548 mm) D x 23-17/32" (598 mm) H	FF: 17-1/2" (445 mm) FL: 17-3/4" (451 mm)	FHB21	White/Wood	$385.99

4WCTM Series

Maple Top Mount



4WCTM-2450BBSCDM-2

- Designed for 15", 18", 21", 24" and 27" base cabinets
- Single 35 and 50 qt., double 27, 35 and 50 qt. and quadruple 27 qt. polymer containers, metallic silver or white
- Natural maple frame with a semi-gloss finish
- Ball-Bearing slides available with and without soft-close
- Rear storage with all single units
- Side storage with 4WCTM-2450BBSCDM
- Mounts to cabinet door, rear and sidewalls
- Adjustable rear-mount brackets and pre-assembled door-mount brackets
- 27, 35 and 50 qt. polymer lids available (sold separately)
- TSCA VI compliant

Scan for video

NOTE: 4WCTM-27-4 AND 4WCTM-27-4-597-FL cannot be door-mounted. Rear storage bin with all 4WCTM single units: 10-3/8" (264 mm) W x 7-3/8" (187 mm) D x 6-3/8" (162 mm) H. Depending on cabinet construction and pull hardware, a lid on the rear waste container may not fully function. See pg. 68 for replacement containers and pg. 70 for lids.

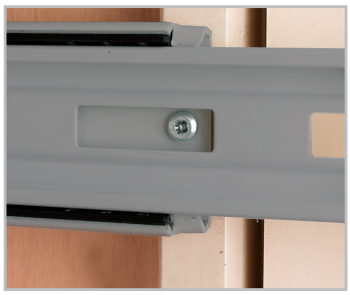

Front of slides mount to the face frame of the cabinet



Adjustable rear-mounting brackets for various cabinet depths



4WCTM Spacer Kit for customized cabinet applications provides up to 1-1/2" width per side



4WCTM-12DM1
Single 35 qt. Waste Container
(White/Maple finish shown)



4WCTM-1816DM-1
Single 35 qt. Waste Container
Reduced Depth
(Silver/Maple finish shown)



4WCTM-15DM2
Double 27 qt. Waste Container
(White/Maple finish shown)



4WCTM-27-4
Quadruple 27 qt. Waste Container
(White/Maple finish shown)
CANNOT BE DOOR-MOUNTED



4WCTM-1550DM1-343-FL
Single 50 qt. Waste Container
(Frameless)
(White/Maple finish shown)



4WCTM-2150BBSCDM-2
Double 50 qt. Waste Container
w/ Ball-Bearing Soft-Close
(Silver/Maple finish shown)



4WCTM-2450BBSCDM-2
Double 50 qt. Waste Container
w/ Ball-Bearing Soft-Close
(Silver/Maple finish shown)

Specs on the following page

4WCTM Series

* Reduced depth
** Full-height required

Maple Top Mount Waste Container Pullouts

	PRODUCT	DESCRIPTION	DIMS	MCO	CAB	FINISH	SLP
	1-1/2" Face Frame						
*	4WCTM-12DM1	Single 35 qt.	12" (305 mm) W x 22-3/4 - 24" (578 - 610 mm) D x 17-7/8" (455 mm) H	12" (305 mm)	FFB15	White/Maple	$180.99
*	4WCTM-1516DM-1	Single 35 qt.	12" (305 mm) W x 16-7/16 - 17-1/2" (418 - 445 mm) D x 17-7/8" (454 mm) H	12" (305 mm)	FFB15	Silver/Maple	$164.99
**	4WCTM-1816DM-1	Single 35 qt.	15" (381 mm) W x 16-1/4 - 17-1/2" (413 - 445 mm) D x 18" (458 mm) H	15" (381 mm)	FFB18	Silver/Maple	$173.99
**	4WCTM-1550DM-1	Single 50 qt.	12" (305 mm) W x 23-1/4 - 24-1/2" (591 - 623 mm) D x 21-3/4" (553 mm) H	12" (305 mm)	FFFHB15	White/Maple	$200.99
	4WCTM-15DM2	Double 27 qt.	12" (305 mm) W x 23-1/4 - 24-1/2" (591 - 623 mm) D x 17-3/4" (451 mm) H	12" (305 mm)	FFB15	White/Maple	$211.99
	4WCTM-18DM2	Double 35 qt.	15" (381 mm) W x 22-3/4 - 24" (578 - 610 mm) D x 17-7/8" (455 mm) H	15" (381 mm)	FFB18	White/Maple	$232.99
	4WCTM-21DM2	Double 35 qt.	18" (458 mm) W x 22-3/4 - 24" (578 - 610 mm) D x 17-7/8" (455 mm) H	18" (457 mm)	FFB21	White/Maple	$241.99
	4WCTM-24DM2	Double 35 qt.	21" (534 mm) W x 22-3/4 - 24" (578 - 610 mm) D x 17-7/8" (455 mm) H	21" (533 mm)	FFB24	White/Maple	$275.99
**	4WCTM-2150DM-2	Double 50 qt.	18" (458 mm) W x 23-1/4 - 24-1/2" (591 - 623 mm) D x 21-3/4" (553 mm) H	18" (457 mm)	FFFHB21	White/Maple	$235.99
	4WCTM-27-4	Quad 27 qt.	24" (610 mm) W x 23-1/4 - 24-1/2" (591 - 623 mm) D x 17-3/4" (451 mm) H	24" (609 mm)	FFB27	White/Maple	$262.45
	1-5/8" Face Frame						
	4WCTM-12DM1-162	Single 35 qt.	11-3/4" (299 mm) W x 22-3/4 - 24" (578 - 610 mm) D x 17-7/8" (455 mm) H	11-3/4" (299 mm)	FFB15	White/Maple	$183.99
*	4WCTM-15DM2-162	Double 27 qt.	11-3/4" (299 mm) W x 23-1/4 - 24-1/2" (591 - 623 mm) D x 17-3/4" (451 mm) H	11-3/4" (299 mm)	FFB15	White/Maple	$214.99
	4WCTM-18DM2-162	Double 35 qt.	14-3/4" (375 mm) W x 22-3/4 - 24" (578 - 610 mm) D x 17-7/8" (455 mm) H	14-3/4" (375 mm)	FFB18	White/Maple	$224.99
	4WCTM-21DM2-162	Double 35 qt.	17-3/4" (451 mm) W x 22-3/4 - 24" (578 - 610 mm) D x 17-7/8" (455 mm) H	17-3/4" (451 mm)	FFB21	White/Maple	$241.99
	4WCTM-24DM2-162	Double 35 qt.	20-3/4" (528 mm) W x 22-3/4 - 24" (578 - 610 mm) D x 17-7/8" (455 mm) H	20-3/4" (527 mm)	FFB24	White/Maple	$277.99
	1-3/4" Face Frame						
	4WCTM-12DM1-175	Single 35 qt.	11-1/2" (293 mm) W x 22-3/4 - 24" (578 - 610 mm) D x 17-7/8" (455 mm) H	11-1/2" (292 mm)	FFB15	White/Maple	$192.99
	4WCTM-18DM2-175	Double 35 qt.	14-1/2" (369 mm) W x 22-3/4 - 24" (578 - 610 mm) D x 17-7/8" (455 mm) H	14-1/2" (368 mm)	FFB18	White/Maple	$230.99
	Frameless - Side mount						
	4WCTM-12DM1-343-FL	Single 35 qt.	13-1/2" (343 mm) W x 22-1/8" (563 mm) D x 17-7/8" (455 mm) H	13-1/2" (343 mm)	FLB15	White/Maple	$201.99
	4WCTM-1550DM1-343-FL	Single 50 qt.	13-1/2" (343 mm) W x 22-5/8" (575 mm) D x 21-3/4" (553 mm) H	13-1/2" (343 mm)	FLFHB15	White/Maple	$203.99
**	4WCTM-15DM2-343-FL	Double 27 qt.	13-1/2" (343 mm) W x 22-5/8" (575 mm) D x 17-3/4" (451 mm) H	13-1/2" (343 mm)	FLB15	White/Maple	$223.99
	4WCTM-18DM2-419-FL	Double 35 qt.	16-1/2" (420 mm) W x 12-1/8" (309 mm) D x 17-7/8" (455 mm) H	16-1/2" (419 mm)	FLB18	White/Maple	$230.99
	4WCTM-1850DM2-419-FL	Double 50 qt.	16-1/2" (420 mm) W x 22-5/8" (575 mm) D x 21-3/4" (553 mm) H	16-1/2" (419 mm)	FLFHB18	White/Maple	$248.99
**	4WCTM-21DM2-495-FL	Double 35 qt.	19-1/2" (496 mm) W x 22-1/8" (563 mm) D x 17-7/8" (455 mm) H	19-1/2" (495 mm)	FLB21	White/Maple	$251.99

Maple Top Mount Waste Container Pullouts w/ Soft-Close

	1-1/2" Face Frame						
	4WCTM-12BBSCDM1	Single 35 qt.	12" (305 mm) W x 22-3/4 - 24" (578 - 610 mm) D x 17-7/8" (455 mm) H	12" (305 mm)	FFB15	Silver/Maple	$203.99
	4WCTM-15BBSCDM2	Double 27 qt.	12" (305 mm) W x 23-1/4 - 24-1/2" (591 - 623 mm) D x 17-3/4" (451 mm) H	12" (305 mm)	FFB15	Silver/Maple	$228.99
	4WCTM-18BBSCDM2	Double 35 qt.	15" (381 mm) W x 22-3/4 - 24" (578 - 610 mm) D x 17-7/8" (455 mm) H	15" (381 mm)	FFB18	Silver/Maple	$266.99
**	4WCTM-1550BBSCDM-1	Single 50 qt.	12" (305 mm) W x 23-1/4 - 24-1/2" (591 - 623 mm) D x 21-3/4" (553 mm) H	12" (305 mm)	FFFHB15	Silver/Maple	$218.99
**	4WCTM-2150BBSCDM-2	Double 50 qt.	18" (458 mm) W x 23-1/4 - 24-1/2" (591 - 623 mm) D x 21-3/4" (553 mm) H	18" (457 mm)	FFFHB21	Silver/Maple	$259.99
**	4WCTM-2450BBSCDM-2	Double 50 qt.	21 - 22-5/32" (534 - 563 mm) W x 22-1/2 - 24-1/2" (572 - 623 mm) D x 21-3/4" (553 mm) H	21" (533 mm)	FHB24	Silver/Maple	$373.99
	Accessories						
	4WCTM-SP-KIT	For Custom Face Frame Installations	1-1/2" (39 mm) W x 22-7/16" (570 mm) D x 2-7/16" (62 mm) H				$51.99

** select "BK" for black, "GR" for green,"OG" for orion gray, "WH" for white - *For use in compo+ unit only*

Wire Undersink Pullout

5SBWC Series

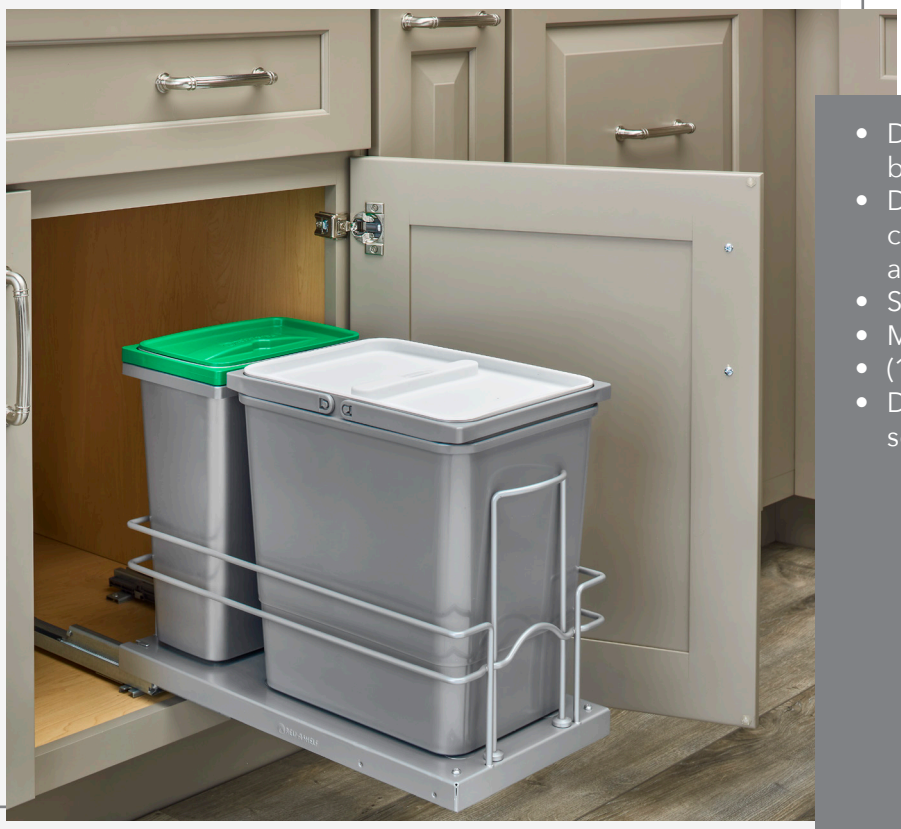

- Designed for 24" and larger sink base cabinets
- Double metallic silver polymer containers with handles, (1) 8 L and (1) 15 L
- Soft-close slides
- Mounts to cabinet floor
- (1) green lid and (1) white lid
- Door-mount kit available (sold separately)

Scan for video

Wire Undersink Waste Pullout

PRODUCT	DESCRIPTION	DIMS	MCO	CAB	FINISH	SLP
5SBWC-815S-1	(1) 8 L and (1) 15 L	8-15/16" (228 mm) W x 18-19/32" (473 mm) D x 14-1/4" (362 mm) H	9" (229 mm)	SB24+	Silver	$185.99
Accessories						
5WB-DMKIT	Door-Mount Kit				Chrome	$42.99

4SOWC Series

Maple Door-Mount



- Designed for 30″ vanity base cabinets
- Single 8 L polymer container, metallic silver
- Maple dovetail frame with a semi-gloss finish
- Mounts to cabinet door
- (4) patented pre-assembled adjustable door-mount brackets (US Patent No. 7,204,569)
- (1) white lid
- TSCA Title VI compliant

Maple Door-Mount Vanity Waste Container

PRODUCT	DESCRIPTION	DIMS	MCO	CAB	FINISH	SLP
4SOWC-8-1	Single 8 L	10-3/8″ (264 mm) W x 7-3/8″ (188 mm) D x 12-5/16″ (313 mm) H	12-3/4″ (324 mm)	VB30	Silver	$106.99







BLIND SOLUTIONS

NO SPACE **WASTED**

Let Rev-A-Shelf® end your blind corner dilemma with our line of innovative organizational accessories. Specially designed to maximize the storage capacity of your cabinets, each product incorporates revolutionary pivot, slide and pull technologies that allow access to every inch of the organizers. While functional and practical, our blind corner solutions are aesthetically pleasing and available in an array of finishes and colors.

PROP 65 WARNING FOR CALIFORNIA RESIDENTS

WARNING: These products can expose you to chemicals such as formaldehyde, lead or styrene, which are known to the State of California to cause cancer and birth defects or other reproductive harm. For more information go to www.P65Warnings.ca.gov

REV-A-SHELF®

5370 Series

The Cloud Contemporary Blind Corner



Soft Close

- Designed for 15", 18" and 21" blind corner cabinet openings
- Single and double solid bottom shelves, orion gray
- Textured linen finish with orion gray flat wire accents
- Left or right handed mounting
- Mounts to cabinet floor (single) and side walls (double)
- Mounted telescopic post system (double)
- 45 lb. capacity (per shelf)
- Soft-close available (sold separately)
- TSCA Title VI compliant

Designed in cooperation with SIGE

Scan for video

5372-21-FOG-R

Single blind corner optimizer for left opening/ blind right corner



Double blind corner optimizer for right opening/ blind left corner



PRODUCT #	SURFACE AREA
5371-15	361 sq. in.
5371-18	471 sq. in.
5371-21	527 sq. in.
5372-15	722 sq. in.
5372-18	942 sq. in.
5372-21	1054 sq. in.

Min. Dimensions				
PRODUCT #	A	B	C	D
5371-15/ 5372-15	34" (864 mm)	15" (381 mm)	7" (180 mm)	4-1/8" (106 mm)
5371-18/5372-18	38" (965 mm)	18" (457 mm)	9-3/16" (233 mm)	3-9/16" (91 mm)
5371-21/5372-21	40" (1016 mm)	21" (533 mm)	9-1/4" (235 mm)	3-7/8" (98 mm)



5371-21-FOG-L
Single Blind Corner Organizer for
Left Opening/Blind Right Cabinet
(21" Shelf shown)



5372-15-FOG-L
Single Blind Corner Organizer for
Left Opening/Blind Right Cabinet
(15" Shelves shown)

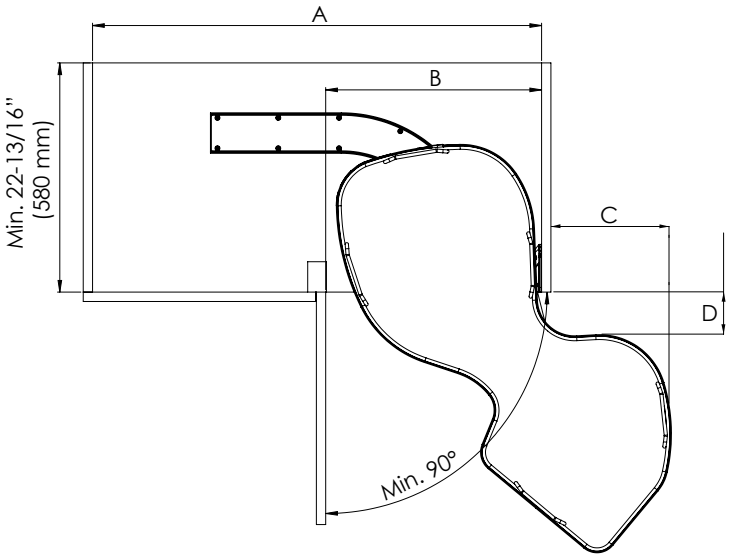

Right Opening/Blind Left Version Shown



Featuring orion gray flat wire with
textured linen solid bottom

Single Blind Corner for Right Opening/Blind Left Cabinets

PRODUCT	DESCRIPTION	DIMS	MCO	CAB	FINISH	SLP
5371-15-FOG-R	Single for 15" Cabinet Opening	33" (839 mm) W x 21-7/8" (556 mm) D x 6-1/2" (166 mm) H	15" (381 mm)	BC42	Orion Gray	$379.99
5371-18-FOG-R	Single for 18" Cabinet Opening	37-19/32" (956 mm) W x 21-9/16" (548 mm) D x 6-1/2" (166 mm) H	18" (457 mm)	BC45	Orion Gray	$396.99
5371-21-FOG-R	Single for 21" Cabinet Opening	39" (991 mm) W x 21-3/4" (553 mm) D x 6-1/2" (166 mm) H	21" (533 mm)	BC48	Orion Gray	$385.99
Single Blind Corner for Left Opening/Blind Right Cabinets						
5371-15-FOG-L	Single for 15" Cabinet Opening	33" (839 mm) W x 21-7/8" (556 mm) D x 6-1/2" (166 mm) H	15" (381 mm)	BC42	Orion Gray	$379.99
5371-18-FOG-L	Single for 18" Cabinet Opening	37-19/32" (956 mm) W x 21-9/16" (548 mm) D x 6-1/2" (166 mm) H	18" (457 mm)	BC45	Orion Gray	$396.99
5371-21-FOG-L	Single for 21" Cabinet Opening	39" (991 mm) W x 21-3/4" (553 mm) D x 6-1/2" (166 mm) H	21" (533 mm)	BC48	Orion Gray	$385.99
Double Blind Corner for Right Opening/Blind Left Cabinets						
5372-15-FOG-R	Double for 15" Cabinet Opening	33" (839 mm) W x 21-7/8" (556 mm) D x 24-1/2 - 30-1/4" (623 - 769 mm) H	15" (381 mm)	BC42	Orion Gray	$904.99
5372-18-FOG-R	Double for 18" Cabinet Opening	37-19/32" (956 mm) W x 21-9/16" (548 mm) D x 24-1/2 - 30-1/4" (623 - 769 mm) H	18" (457 mm)	BC45	Orion Gray	$934.99
5372-21-FOG-R	Double for 21" Cabinet Opening	39" (991 mm) W x 21-3/4" (553 mm) D x 24-7/16 - 30-1/4" (621 - 769 mm) H	21" (533 mm)	BC48	Orion Gray	$955.99
Double Blind Corner for Left Opening/Blind Right Cabinets						
5372-15-FOG-L	Double for 15" Cabinet Opening	33" (839 mm) W x 21-7/8" (556 mm) D x 24-1/2 - 30-1/4" (623 - 769 mm) H	15" (381 mm)	BC42	Orion Gray	$904.99
5372-18-FOG-L	Double for 18" Cabinet Opening	37-19/32" (956 mm) W x 21-9/16" (548 mm) D x 24-1/2 - 30-1/4" (623 - 769 mm) H	18" (457 mm)	BC45	Orion Gray	$934.99
5372-21-FOG-L	Double for 21" Cabinet Opening	39" (991 mm) W x 21-3/4" (553 mm) D x 24-7/16 - 30-1/4" (621 - 769 mm) H	21" (533 mm)	BC48	Orion Gray	$955.99
Soft-Close Kit						
5371-SC-KIT-1	Soft-Close Kit for Single Shelf					$74.99
5372-SC-KIT-2	Soft-Close Kit for Double Shelves					$145.99

5370 Series

The Cloud Contemporary Blind Corner



- Designed for 15", 18" and 21" blind corner cabinet openings
- Single and double solid bottom shelves, natural maple or gray
- Chrome round wire accents
- Left or right handed mounting
- Mounts to cabinet floor (single) and side walls (double)
- Mounted telescopic post system (double)
- 45 lb. capacity per shelf
- Soft-close available (sold separately)
- TSCA Title VI compliant

Designed in cooperation with GIGE

Scan for video

5372-21-MP-L

Single blind corner optimizer for left opening/ blind right corner



Double blind corner optimizer for right opening/ blind left corner



rev-a-shelf.com | 800-626-1126 | info@rev-a-shelf.com

REV-A-SHELF

PRODUCT #	SURFACE AREA
5371-15	361 sq. in.
5371-18	471 sq. in.
5371-21	527 sq. in.
5372-15	722 sq. in.
5372-18	942 sq. in.
5372-21	1054 sq. in.

Min. Dimensions				
PRODUCT #	A	B	C	D
5371-15/ 5372-15	34" (864 mm)	15" (381 mm)	7" (180 mm)	4-1/8" (106 mm)
5371-18/5372-18	38" (965 mm)	18" (457 mm)	9-3/16" (233 mm)	3-9/16" (91 mm)
5371-21/5372-21	40" (1016 mm)	21" (533 mm)	9-1/4" (235 mm)	3-7/8" (98 mm)

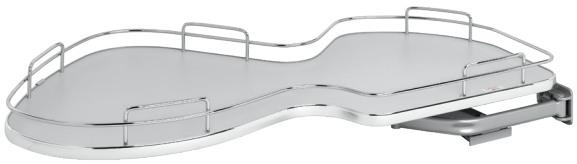

5371-21-GR-R
Single Blind Corner Organizer for
Right opening/blind left cabinet
(21" Gray Shelf shown)

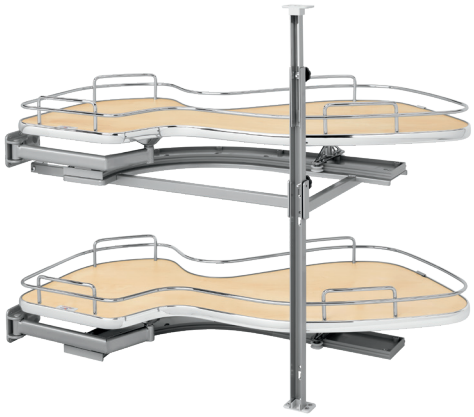

5372-15-MP-L
Single Blind Corner Organizer for
Left opening/blind right cabinet
(15" Maple Shelves shown)

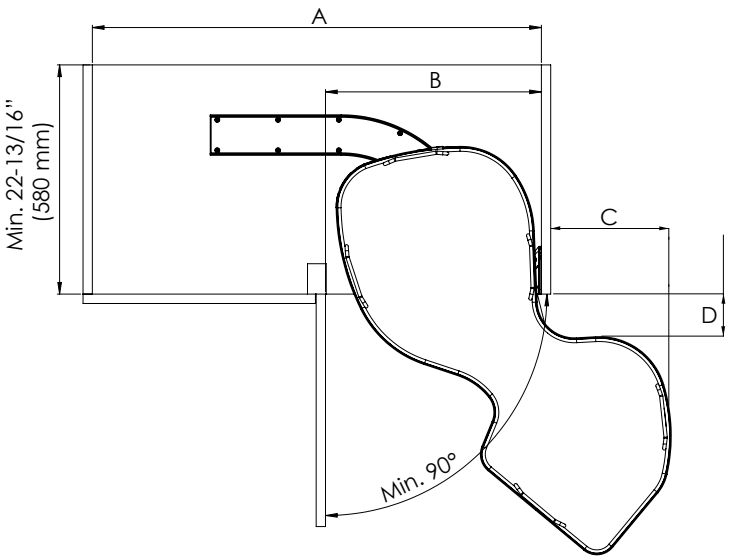

Right Opening /Blind Left Version Shown

NOTE: ** Insert "MP" for Maple Shelf or "GR" for Gray Shelf

PRODUCT	DESCRIPTION	DIMS	MCO	CAB	SLP
Single Blind Corner for Right Opening/Blind Left Cabinets					
5371-15-**-R	Single for 15" Cabinet Opening	33" (838 mm) W x 21-7/8" (556 mm) D x 6-1/2" (165 mm) H	15" (381 mm)	BC42	$336.99
5371-18-**-R	Single for 18" Cabinet Opening	37-5/8" (956 mm) W x 21-9/16" (548 mm) D x 6-1/2" (165 mm) H	18" (457 mm)	BC45	$343.99
5371-21-**-R	Single for 21" Cabinet Opening	39" (991 mm) W x 21-3/4" (553 mm) D x 6-1/2" (165 mm) H	21" (533 mm)	BC48	$353.99
Single Blind Corner for Left Opening/Blind Right Cabinets					
5371-15-**-L	Single for 15" Cabinet Opening	33" (839 mm) W x 21-7/8" (556 mm) D x 6-1/2" (166 mm) H	15" (381 mm)	BC42	$333.99
5371-18-**-L	Single for 18" Cabinet Opening	37-19/32" (956 mm) W x 21-9/16" (548 mm) D x 6-1/2" (166 mm) H	18" (457 mm)	BC45	$343.99
5371-21-**-L	Single for 21" Cabinet Opening	39" (991 mm) W x 21-3/4" (553 mm) D x 6-1/2" (166 mm) H	21" (533 mm)	BC48	$353.99
Double Blind Corner for Right Opening/Blind Left Cabinets					
5372-15-**-R	Double for 15" Cabinet Opening	33" (839 mm) W x 21-7/8" (556 mm) D x 24-1/2 - 30-1/4" (623 - 769 mm) H	15" (381 mm)	BC42	$856.99
5372-18-**-R	Double for 18" Cabinet Opening	37-19/32" (956 mm) W x 21-9/16" (548 mm) D x 24-1/2 - 30-1/4" (623 - 769 mm) H	18" (457 mm)	BC45	$868.99
5372-21-**-R	Double for 21" Cabinet Opening	39" (991 mm) W x 21-3/4" (553 mm) D x 24-7/16 - 30-1/4" (621 - 769 mm) H	21" (533 mm)	BC48	$899.99
Double Blind Corner for Left Opening/Blind Right Cabinets					
5372-15-**-L	Double for 15" Cabinet Opening	33" (839 mm) W x 21-7/8" (556 mm) D x 24-1/2 - 30-1/4" (623 - 769 mm) H	15" (381 mm)	BC42	$856.99
5372-18-**-L	Double for 18" Cabinet Opening	37-19/32" (956 mm) W x 21-9/16" (548 mm) D x 24-1/2 - 30-1/4" (623 - 769 mm) H	18" (457 mm)	BC45	$868.99
5372-21-**-L	Double for 21" Cabinet Opening	39" (991 mm) W x 21-3/4" (553 mm) D x 24-7/16 - 30-1/4" (621 - 769 mm) H	21" (533 mm)	BC48	$899.99
Soft-Close Kit					
5371-SC-KIT-1	Soft-Close Kit for Single Shelf				$74.99
5372-SC-KIT-2	Soft-Close Kit for Double Shelves				$145.99

587 Series

Girasolo Blind Corner Optimizer

COMPAGNUCCI QUALITY MADE IN ITALY



- Designed for 12", 15" or 18" blind corner cabinet openings
- Easy installation
- Chrome-plated round wire railing
- Single or two-tier 5/8" thick maple-faced melamine shelf bottom
- Pulls directly forward, eliminating clearance issues from adjacent appliances
- Left or right-handed mounting
- Mounts to cabinet floor, side or top; depending on application
- Mounted telescopic post system
- 30 lb. capacity per shelf
- Soft-close pivot hardware system
- Adjustable shelf heights
- TSCA Title VI compliant

587-12-RMP

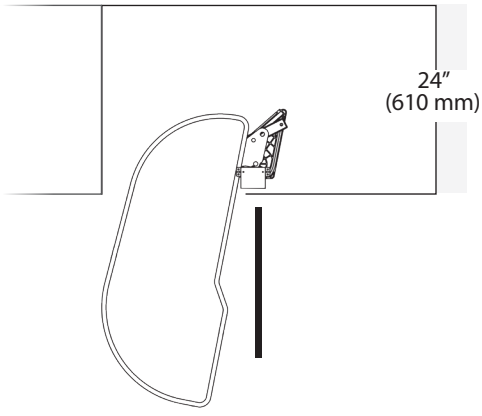

Left Opening /Blind Right Version Shown

	Min. Dimensions			
PRODUCT #	**A**	**B**	**C**	**Surface Area**
587-12-***	34" (864 mm)	12" (305 mm)	14-3/16" (360mm)	249 sq in per shelf
587-15-***	37" (940 mm)	15" (381 mm)	16-5/32" (410 mm)	349 sq in per shelf
587-18-***	39" (991 mm)	18" (457 mm)	18-1/2" (470 mm)	449 sq in per shelf

A = Width of shelf
B = MCO
C = Inside front of cabinet to rear of tray



Easily adjustable top shelf

* Insert L for Left Opening/Blind Right Cabinets or R for Right Opening/Blind Left Cabinets

Single-Tier "Girasolo" Blind Corner Optimizer

PRODUCT	DESCRIPTION	DIMS	MCO	CAB	SLP
5871-12-*MP	Single for 12" Cabinet Opening	32-23/32" (832 mm) W x 14-13/32" (367 mm) D x 10-7/32" (260 mm) H	12" (305 mm)	BC42	$504.99
5871-15-*MP	Single for 15" Cabinet Opening	35-1/2" (902 mm) W x 16-7/16" (418 mm) D x 10-7/32" (260 mm) H	15" (381 mm)	BC45	$515.99
5871-18-*MP	Single for 18" Cabinet Opening	38-13/32" (976 mm) W x 18-15/32" (470 mm) D x 10-7/32" (260 mm) H	18" (457 mm)	BC48	$531.99
Two-Tier "Girasolo" Blind Corner Optimizer					
587-12-*MP	Double for 12" Cabinet Opening	32-23/32" (832 mm) W x 14-13/32" (367 mm) D x 24-13/32 - 30-11/16" (621 - 780 mm) H	12" (305 mm)	BC42	$904.99
587-15-*MP	Double for 15" Cabinet Opening	35-1/2" (902 mm) W x 16-7/16" (418 mm) D x 24-1/2 - 30-1/2" (623 - 775 mm) H	15" (381 mm)	BC45	$917.99
587-18-*MP	Double for 18" Cabinet Opening	38-13/32" (976 mm) W x 18-15/32" (470 mm) D x 24-1/2 - 30-1/2" (623 - 775 mm) H	18" (457 mm)	BC48	$926.99

Maple Girasolo Blind Corner Optimizer

4WLS Series



4WLS87-18-L

- Designed for 12", 15" or 18" blind cabinet openings
- Single or two-tier 5/8" thick natural maple shelf bottom
- 1-5/8" solid wood frame with a finger joint rim
- Pulls directly forward, eliminating clearance issues from adjacent appliances
- Left or right-handed mounting
- Mounts to cabinet floor, side and top
- Mounted telescopic with a soft-close pivot hardware system
- Easy installation
- 33 lb. capacity per shelf
- Soft-close pivot hardware system
- Adjustable shelf heights
- TSCA Title VI compliant

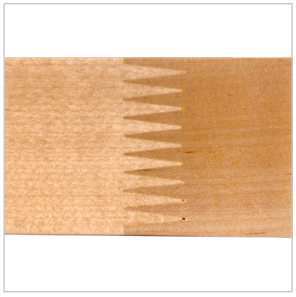

Finger joint construction

* Insert L for Left Opening/Blind Right Cabinets or R for Right Opening/Blind Left Cabinets

PRODUCT	DESCRIPTION	DIMS	MCO	CAB	SLP
Maple Single-Tier "Girasolo" Blind Corner Optimizer					
4WLS871-12-*	Single for 12" Cabinet Opening	33-1/16" (840 mm) W x 14-9/16" (371 mm) D x10-7/32" (260 mm) H	12" (305 mm)	BC42	$462.99
4WLS871-15-*	Single for 15" Cabinet Opening	35-13/16" (910 mm) W x 16-5/8" (423 mm) D x10-7/32" (260 mm) H	15" (381 mm)	BC45	$471.99
4WLS871-18-*	Single for 18" Cabinet Opening	37-31/32" (965 mm) W x 18-1/32" (459 mm) D x10-7/32" (260 mm) H	18" (457 mm)	BC48	$479.99
Maple Two-Tier "Girasolo" Blind Corner Optimizer					
4WLS87-12-*	Double for 12" Cabinet Opening	33-1/16" (840 mm) W x 14-9/16" (371 mm) D x 24-13/32 - 30-11/16" (621 - 780 mm) H	12" (305 mm)	BC42	$815.99
4WLS87-15-*	Double for 15" Cabinet Opening	35-13/16" (910 mm) W x 16-5/8" (423 mm) D x 24-13/32 - 30-11/16" (621 - 780 mm) H	15" (381 mm)	BC45	$836.99
4WLS87-18-*	Double for 18" Cabinet Opening	37-31/32" (965 mm) W x 18-1/32" (459 mm) D x 24-13/32 - 30-11/16" (621 - 780 mm) H	18" (457 mm)	BC48	$858.99

53PSPE Series

Elite Solid Bottom Blind Corner Optimizer



53PSPE3-18SC-MP

- Designed for full-height 15" and 18" blind corner cabinet openings
- Two or three-tier wire frame
- (4) or (6) solid-bottom shelves, natural maple, gray or textured linen
- Up to (4) independently sliding upper shelves
- Chrome-plated round wire or orion gray flat wire
- Soft-close slides
- Universal mounting, non-handed
- Mounts to cabinet floor
- 15 lb. (per shelf) capacity
- Increased over-travel to provide 3-1/2" clearance for adjacent appliances
- TSCA Title VI compliant

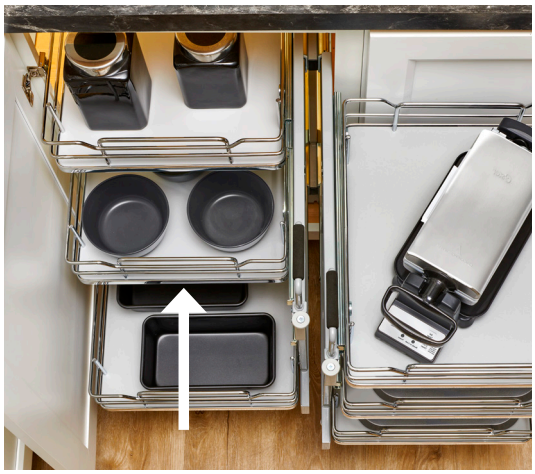

Sliding top shelves work independently from the lower shelves



53PSPE-15SC-MP
Elite Two-Tier Blind Corner Optimizer
(Maple finish shown)

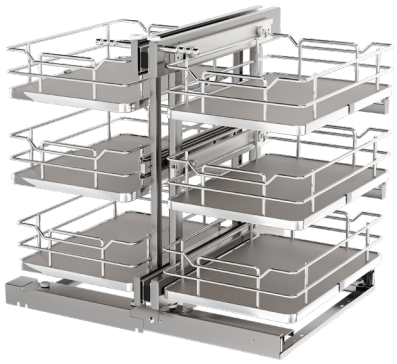

53PSPE3-15SC-GR
Elite Three-Tier Blind Corner Optimizer
(Gray finish shown)



53PSPE-18SC-FOG
Elite Two-Tier Blind Corner Optimizer
(Orion Gray finish shown)

SPACE BETWEEN SHELVES
Two-tier soft-close = 11" (279 mm)
Three-tier soft-close = 7-15/16" (202 mm)
Two-tier non soft-close = 10-9/32" (261 mm)

15" (381 mm) Min. Cabinet Width opening (15)
18" (457 mm) Min. Cabinet Width opening (18)
Both Models:
21-21/32" (550 mm) Minimum Inside Cabinet Depth
23-3/4" (603 mm) Minimum Cabinet Height opening (53PSPE)
26-3/4" (679 mm) Minimum Cabinet Height opening (53PSPE3)

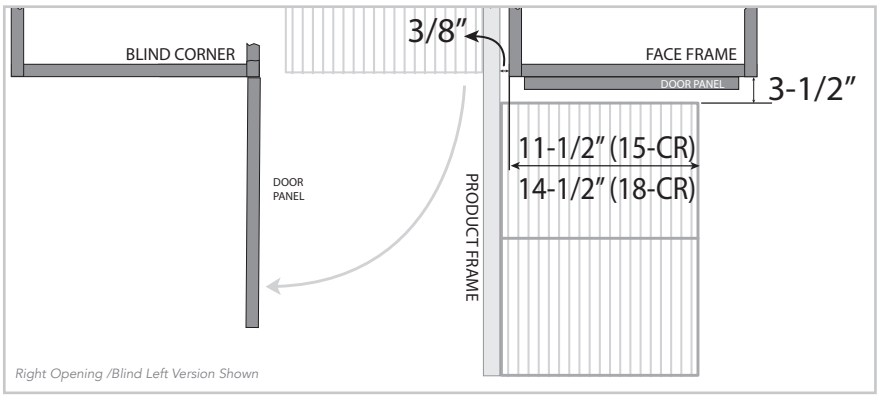

PRODUCT #	SURFACE AREA
53PSPE-15SC-**	194 in² per shelf
53PSPE-18SC-**	243 in² per shelf
53PSPE3-15SC-**	194 in² per shelf
53PSPE3-18SC-**	243 in² per shelf

NOTE: ** Insert "MP" for Maple Shelf or "GR" for Gray Shelf

PRODUCT	DESCRIPTION	DIMS	MCO	CAB	SLP
Elite Two-Tier Solid Bottom Blind Corner Optimizer - Non-Handed w/ Soft-Close					
53PSPE-15SC-**	Two-Tier Blind Corner Optimizer	26-1/4" (667 mm) W x 20-1/4" (514 mm) D x 23-21/32" (601 mm) H	15" (381 mm)	BC42	$1172.99
53PSPE-18SC-**	Two-Tier Blind Corner Optimizer	32-1/4" (819 mm) W x 20-1/4" (514 mm) D x 23-21/32" (601 mm) H	18" (457 mm)	BC45	$1233.99
Elite Three-Tier Solid Bottom Blind Corner Optimizer - Non-Handed w/ Soft-Close					
53PSPE3-15SC-**	Three-Tier Blind Corner Optimizer	26-1/4" (667 mm) W x 20-1/4" (514 mm) D x 26-1/2" (673 mm) H	15" (381 mm)	FHBC42	$1390.99
53PSPE3-18SC-**	Three-Tier Blind Corner Optimizer	32-1/4" (819 mm) W x 20-1/4" (514 mm) D x 26-1/2" (673 mm) H	18" (457 mm)	FHBC45	$1462.99
Elite Two-Tier Solid Bottom Blind Corner Optimizer - Non-Handed w/ Soft-Close					
53PSPE-18SC-FOG	Two-Tier Blind Corner Optimizer	32-5/8" (829 mm) W x 21-19/32" (549 mm) D x 21" (534 mm) H	18" (458 mm)	BC45	$1324.99

5PSP Series

Wire Bottom Blind Corner Optimizer



5PSP-18SC-CR

Soft Close

- Designed for 15" and 18" blind corner cabinet openings
- Two or three-tier wire frame
- (4) or (6) wire bottom shelves with round wire accents
- (2) slide configurations:
  - Full-extension ball-bearing slides
  - Full-extension, ball-bearing slides w/ soft-close
- Universal mounting, non-handed
- Mounts to cabinet floor
- Increased over-travel to provide 3-1/2" clearance for adjacent appliances
- 15 lb. capacity (per shelf)

Scan for video

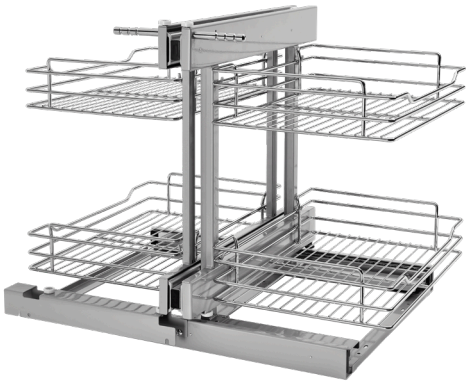

5PSP-15-CR
Two-Tier Blind Corner Optimizer
(15" Non soft-close version shown)



Unit partially extended

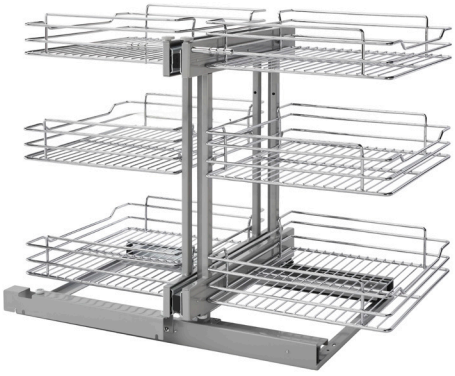

5PSP3-18SC-CR
Three-Tier Blind Corner Optimizer
w/ Soft-Close
(18" version shown)

SPACE BETWEEN SHELVES
Two-tier soft-close = 11" (279 mm)
Three-tier soft-close = 7-15/16" (202 mm)
Two-tier non soft-close = 10-9/32" (261 mm)

15" (381 mm) Min. Cabinet Width opening (15)
18" (457 mm) Min. Cabinet Width opening (18)
Both Models:
21-21/32" (550 mm) Minimum Inside Cabinet Depth
22" (559 mm) Minimum Cabinet Height opening (5PSP)
25" (635 mm) Minimum Cabinet Height opening (5PSP3)

PRODUCT #	SURFACE AREA
5PSP-15-CR	194 in² per shelf
5PSP-18-CR	243 in² per shelf
5PSP-15SC-CR	194 in² per shelf
5PSP-18SC-CR	243 in² per shelf
5PSP3-15SC-CR	194 in² per shelf
5PSP3-18SC-CR	243 in² per shelf

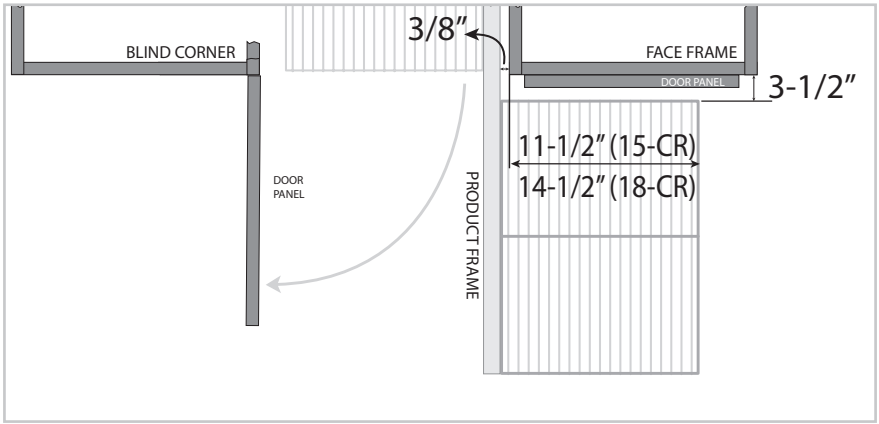

Three-Tier Wire Bottom Blind Corner Optimizer - Non-Handed w/ Soft-Close

PRODUCT	DESCRIPTION	DIMS	MCO	CAB	FINISH	SLP
5PSP3-15SC-CR	Three-Tier Blind Corner Optimizer	26-13/32" (671 mm) W x 21-19/32" (549 mm) D x 23-27/32" (606 mm) H	15" (381 mm)	FHBC42	Chrome	$1102.99
5PSP3-18SC-CR	Three-Tier Blind Corner Optimizer	32-11/32" (822 mm) W x 21-19/32" (549 mm) D x 23-27/32" (606 mm) H	18" (457 mm)	FHBC45	Chrome	$1149.99
Two-Tier Wire Bottom Blind Corner Optimizer - Non-Handed w/ Soft-Close						
5PSP-15SC-CR	Two-Tier Blind Corner Optimizer	26-13/32" (671 mm) W x 20-13/32" (519 mm) D x 21" (534 mm) H	15" (381 mm)	BC42	Chrome	$931.99
5PSP-18SC-CR	Two-Tier Blind Corner Optimizer	32-1/4" (820 mm) W x 20-13/32" (519 mm) D x 21" (534 mm) H	18" (457 mm)	BC45	Chrome	$1040.99
Two-Tier Wire Bottom Blind Corner Optimizer - Non-Handed						
5PSP-15-CR	Two-Tier Blind Corner Optimizer	26-15/32" (673 mm) W x 21-19/32" (549 mm) D x 21" (534 mm) H	15" (381 mm)	BC42	Chrome	$791.99
5PSP-18-CR	Two-Tier Blind Corner Optimizer	32-3/8" (823 mm) W x 21-19/32" (549 mm) D x 21" (534 mm) H	18" (457 mm)	BC45	Chrome	$863.99

582 Series

The Curve
Contemporary Blind Corner



- Designed for face frame 18" blind corner cabinet openings (frameless 18-7/8" min.)
- Two-tier metal frame
- (2) solid bottom shelves with Stylinox™ anti-skid finish, natural maple
- Chrome round wire accents
- Soft-close slides
- Left or right handed mounting
- Mounts to cabinet door, floor and side walls
- Adjustable mounting brackets
- 60 lb. capacity per shelf
- Shelves operate independently
- TSCA Title VI compliant

COMPAGNUCCI
QUALITY MADE IN ITALY

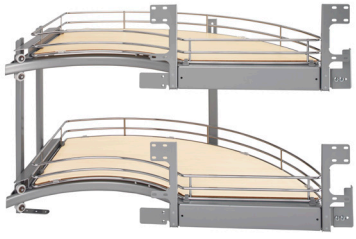

582-18-RMP
Two-Tier Blind Corner Organizer
(Right Door for Blind Left Corner Cabinet Shown)

PRODUCT #	SURFACE AREA
582-18*	775 sq. in.

MINIMUM CABINET OPENING HEIGHT
22" (559 mm)

*** 18-7/8" to 19-7/8" Frameless cabinet opening**

Two-Tier Blind Corner

PRODUCT	DESCRIPTION	DIMS	MCO	CAB	FINISH	SLP
582-18-RMP	Right Door Mount for Blind Left Corner Cabinet	35-3/4" (909 mm) W x 18-5/8" (474 mm) D x 20-13/16 - 22-13/16" (529 - 580 mm) H	18" (457 mm) - FF 18-7/8" (479 mm) - FL	BC45	Maple/Chrome	$1216.99
582-18-LMP	Left Door Mount for Blind Right Corner Cabinet	35-3/4" (909 mm) W x 18-5/8" (474 mm) D x 20-13/16 - 22-13/16" (529 - 580 mm) H	18" (457 mm) - FF 18-7/8" (479 mm) - FL	BC45	Maple/Chrome	$1216.99

Wire Bottom Two-Tier Blind Corner Optimizer

5707 Series



Soft Close

- Designed for 15" and 18" blind corner cabinet openings
- Two-tier chrome wire bottom shelves
- Full-extension, ball-bearing slides w/ soft-close
- Mounts to cabinet door, floor and side walls
- Rear shelves slide forward as cabinet door opens
- Mounts to cabinet door, floor and side walls
- Universal mounting, non-handed
- Front shelves feature 23 lb. capacity and rear shelves feature 36 lb. capacity per shelf
- Door tilt adjustment screws for precise alignment

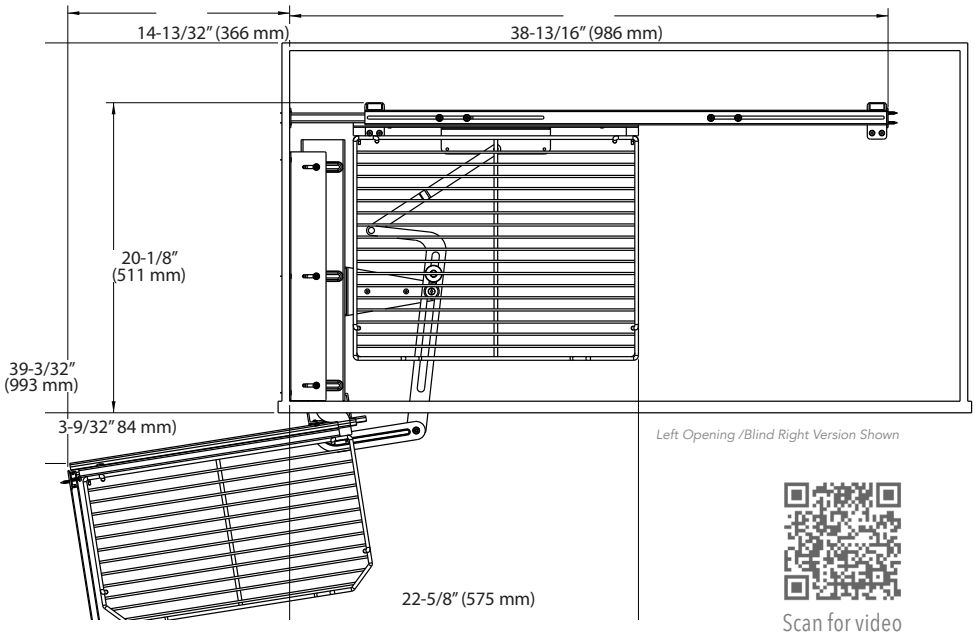

Left Opening /Blind Right Version Shown

Scan for video



5707-15CR
Wire Bottom Two-Tier
Blind Corner Optimizer
(15" version shown)

PRODUCT #	SURFACE AREA
5707-15CR	834 sq. in.
5707-18CR	941 sq. in.

MINIMUM CABINET OPENING HEIGHT
20-3/4" (527 mm)

Wire Bottom Two-Tier Blind Corner Organizer w/ Soft-Close

PRODUCT	DESCRIPTION	DIMS	MCO	CAB	FINISH	SLP
5707-15CR	Blind Corner Organizer for 15" Opening	See detailed specifications above in illustration	15" (381 mm)	BC42	Chrome	$1153.99
5707-18CR	Blind Corner Organizer for 18" Opening	See detailed specifications above in illustration	18" (457 mm)	BC45	Chrome	$1153.99

Lazy Susans

Half-Moon Lazy Susan

- Designed for 12", 15" and 18" blind corner cabinet openings
- Double solid bottom shelves, natural or wood classic
- Wood Classic features solid rim and Natural features steam bent rim
- Non-handed
- Pivot and slide hardware
- 90° hinge euro brackets and standard mounting brackets
- Chrome-plated shafts
- TSCA Title VI compliant



4WLS882-35-570



LD-4NW-882-38-1
Natural Wood Half-Moon
Lazy Susan w/ Pivot and Slide
(38" version shown)

Wood Half-Moon

PRODUCT #	SURFACE AREA
32" Half-Moon	352 sq. in.
35" Half-Moon	456 sq. in.
38" Half-Moon	501 sq. in.

(2) Shelf Wood Classic Half-Moon Lazy Susans w/ Pivot and Slide

PRODUCT	DESCRIPTION	DIMS	MCO	CAB	FINISH	SLP
4WLS882-32-570	(2) Shelf Set	32-1/4" (820 mm) W x 14-5/32" (360 mm) D x 16" (407 mm) H	12" (305 mm) - FF 13-1/4" (337 mm) - FL	BC42	Maple	$493.99
4WLS882-35-570	(2) Shelf Set	35" (889 mm) W x 17-5/32" (436 mm) D x 16" (407 mm) H	15" (381 mm) - FF 16-1/4" (413 mm) - FL	BC45	Maple	$579.99
4WLS882-38-570	(2) Shelf Set	37-3/4" (959 mm) W x 20-3/16" (513 mm) D x 16" (407 mm) H	18" (457 mm) - FF 19-1/4" (489 mm) - FL	BC48	Maple	$665.99
Natural Wood Half-Moon Lazy Susans w/ Pivot and Slide						
LD-4NW-882-32-1	(2) Shelf Set	32-1/4" (820 mm) W x 14-1/16" (358 mm) D x 16" (407 mm) H	12" (305 mm) - FF 13-1/4" (337 mm) - FL	BC42	Maple	$549.99
LD-4NW-882-35-1	(2) Shelf Set	35" (889 mm) W x 17-1/16" (434 mm) D x 16" (407 mm) H	15" (381 mm) - FF 16-1/4" (413 mm) - FL	BC45	Maple	$598.99
LD-4NW-882-38-1	(2) Shelf Set	37-5/8" (957 mm) W x 20-1/16" (510 mm) D x 16" (407 mm) H	18" (457 mm) - FF 19-1/4" (489 mm) - FL	BC48	Maple	$678.99
Hardware						
6882-1008-04-52	Half-Moon Slide Kit (1 Pair)	10-1/2" (267 mm) Extension			Polymer	$66.99

Solid Bottom Two-Tier Blind Corner Optimizer

599 Series



- Designed for 18" blind corner cabinet openings
- Two-tier metal frame
- (4) solid bottom shelves with Stylinox™ anti-skid finish, natural maple
- Chrome round wire accents
- Soft-close slides
- Left or right handed mounting
- Mounts to cabinet door, floor and side walls
- Adjustable mounting brackets
- 20 lb. capacity per shelf
- Rear shelves slide forward as door opens
- TSCA Title VI compliant



599-18-RMP
Solid Bottom Two-Tier Optimizer
(Right 18" version shown)

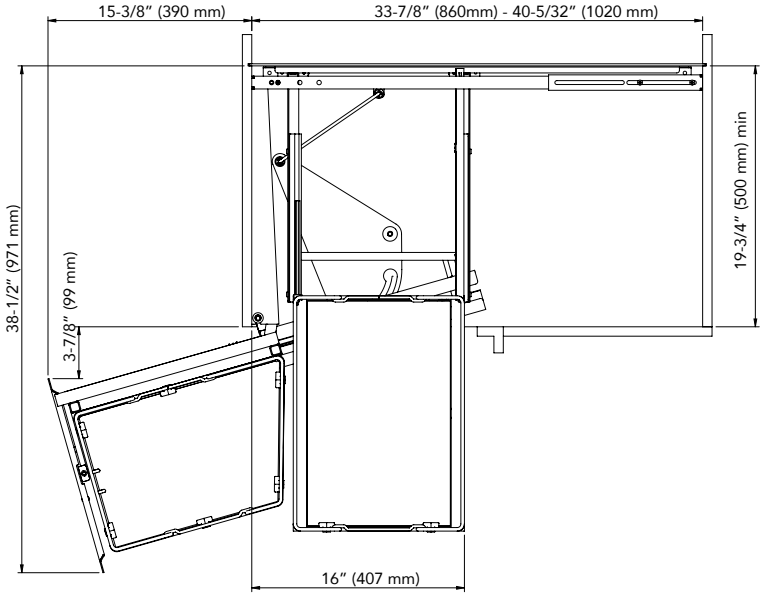

MINIMUM CABINET HEIGHT
26-5/8" (676 mm)

PRODUCT #	SURFACE AREA
599-18-L/RMP	726 sq. in.

NOTE: This product was designed for frameless cabinets. Modifications are required to install in a face frame cabinet. This product **CANNOT** be installed in an inset cabinet.

Solid Bottom Two-Tier Blind Corner Optimizer w/ Soft-Close

PRODUCT	DESCRIPTION	DIMS	MCO	CAB	FINISH	SLP
599-18-LMP	Left Door Mount for Blind Right Corner Cabinet	See Drawings Above	18" (457 mm)	FHBC45	Maple/Chrome	$1806.99
599-18-RMP	Right Door Mount for Blind Left Corner Cabinet	See Drawings Above	18" (457 mm)	FHBC45	Maple/Chrome	$1806.99



Innovation through *Organization*™







SINK SOLUTIONS

MADE FOR UNDERNEATH

Our line of sink base accessories has grown so large that we dedicated an entire chapter to it. We are proud to offer innovative and versatile products, including our Tip-Out Trays, U-Shaped Pullout Shelves and Under-Sink Caddies. These popular accessories feature the same superior quality adherent throughout the Rev-A-Shelf® product line.

PROP 65 WARNING FOR CALIFORNIA RESIDENTS

WARNING: These products can expose you to chemicals such as formaldehyde, lead or styrene, which are known to the State of California to cause cancer and birth defects or other reproductive harm. For more information go to www.P65Warnings.ca.gov

REV-A-SHELF®

563 Series Towel Holders



563-47 C

Door-Mount
- Designed for 30" sink base (butt door) cabinets
- Wire construction, powder-coated white or chrome-plated
- Mounts to cabinet door
- Holds up to (3) dish towels

Pullout
- Designed for base or sink base cabinets
- Wire construction, powder-coated white or chrome-plated
- Full-extension friction slide or 3/4-extension, ball-bearing slide (563-51-C only)
- Universal mounting, non-handed
- Mounts to cabinet side walls
- Holds up to (2) or (3) dish towels



563-32 C
Door-Mount Towel Holder
(Chrome finish shown)



563-51 C
2-Prong Pullout Towel Holder
(Chrome finish shown)

Door-Mount Towel Holder

PRODUCT	DESCRIPTION	DIMS	MCO	CAB	FINISH	SLP
563-32	Towel Holder	33-29/32" (862 mm) W x 18-1/2" (470 mm) D x 5-1/8" (131 mm) H	13" (330 mm) - FF 13" (330 mm) - FL	SB30	White	$6.99
563-32 C	Towel Holder	12-3/4" (324 mm) W x 2-3/4" (71 mm) D x 6" (153 mm) H	13" (330 mm) - FF 13" (330 mm) - FL	SB30	Chrome	$6.99
Pullout Towel Holder w/ Ball-Bearing Slide						
563-51-C	2-Prong Towel Holder	4-1/16" (104 mm) W x 12-7/8" (328 mm) D x 1-1/2" (39 mm) H	5" (127 mm)		Chrome	$38.99
Pullout Towel Holder w/ Friction Slide						
563-47	3-Prong Towel Holder	5" (127 mm) W x 17-3/4" (451 mm) D x 1-13/32" (36 mm) H	6" (152 mm)		White	$40.99
563-47 C	3-Prong Towel Holder	5" (127 mm) W x 17-3/4" (451 mm) D x 1-13/32" (36 mm) H	6" (152 mm)		Chrome	$37.70

Door-Mount Paper Towel Holder

4SBPT Series



- Designed for 36" sink base cabinets
- Natural maple construction with a semi-gloss finish
- Lift-out design to replace your paper towels
- Patented adjustable door-mount brackets that provide up to 5" of adjustability (US Patent No. 7,204,569)
- Tear bar ensures an easy one-handed tear every time
- Lower shelf for additional storage
- Mounts to cabinet door
- TSCA Title VI compliant



Lower shelf for additional storage

Door-Mount Paper Towel Holder

PRODUCT	DESCRIPTION	DIMS	MCO	CAB	FINISH	SLP
4SBPT-18-1	Paper Towel Holder	13-1/2" (343 mm) W x 7-11/32" (187 mm) D x 18-1/2" (470 mm) H	14-3/8" (366 mm)	SB36	Maple	$173.99

SBDTF Series

Flexible Drip Tray

NEW FINISH!

- Designed for 27" to 42" sink base cabinets
- Flexible, durable and easy-to-clean TPE construction, almond, gray or white finish
- Trimmable
- Drop-in installation
- Funnels excess water out the front of your cabinet
- Can be installed in existing cabinet construction



SBDTF-3336-14-1

See page 270 for vanity version

Scan for video



Flexible, durable, and easy-to-clean TPE construction, gray



Funnels excess water out of the front of your cabinet

Flexible Drip Tray

PRODUCT	DESCRIPTION	DIMS	CAB	FINISH	SLP
SBDTF-2730-15-1	Drip Tray	25-1/2 - 28-1/2" (648 - 724 mm) W x 21-1/2 - 23-1/4" (547 - 591 mm) D x 3/4" (20 mm) H	SB-27-30	Almond	$63.99
SBDTF-3336-15-1	Drip Tray	31-1/2 - 34-1/2" (801 - 877 mm) W x 21-1/2 - 23-1/4" (547 - 591 mm) D x 3/4" (20 mm) H	SB-33-36	Almond	$72.99
SBDTF-3942-15-1	Drip Tray	37-1/2 - 40-1/2" (953 - 1029 mm) W x 21-1/2 - 23-3/4" (547 - 604 mm) D x 3/4" (20 mm) H	SB-39-42	Almond	$80.99
SBDTF-2730-14-1	Drip Tray	25-1/2 - 28-1/2" (648 - 724 mm) W x 21-1/2 - 23-1/4" (547 - 591 mm) D x 3/4" (20 mm) H	SB-27-30	Gray	$63.99
SBDTF-3336-14-1	Drip Tray	31-1/2 - 34-1/2" (801 - 877 mm) W x 21-1/2 - 23-1/4" (547 - 591 mm) D x 3/4" (20 mm) H	SB-33-36	Gray	$72.99
SBDTF-3942-14-1	Drip Tray	37-1/2 - 40-1/2" (953 - 1029 mm) W x 21-1/2 - 23-3/4" (547 - 604 mm) D x 3/4" (20 mm) H	SB-39-42	Gray	$80.99
SBDTF-2730-11-1	Drip Tray	25-1/2 - 28-1/2" (648 - 724 mm) W x 21-1/2 - 23-1/4" (547 - 591 mm) D x 3/4" (20 mm) H	SB-27-30	White	$63.99
SBDTF-3336-11-1	Drip Tray	31-1/2 - 34-1/2" (801 - 877 mm) W x 21-1/2 - 23-1/4" (547 - 591 mm) D x 3/4" (20 mm) H	SB-33-36	White	$72.99
SBDTF-3942-11-1	Drip Tray	37-1/2 - 40-1/2" (953 - 1029 mm) W x 21-1/2 - 23-3/4" (547 - 604 mm) D x 3/4" (20 mm) H	SB-39-42	White	$80.99

Polymer Drip Tray

SBDT Series



SBDT-3942-11-1

NEW FINISH!

- Designed for installation in new 30", 36" and 42" sink base cabinet construction
- Can be cut down to fit a 27", 33" or 39" cabinet
- Protects the bottom of your cabinet from spills
- Funnels excess water out of the front of your cabinet
- Almond or white finish

See page 271 for vanity version

Tray Capacity	
SBDT-2730	1-1/2 qt.
SBDT-3336	1-3/4 qt.
SBDT-3942	2-1/5 qt.

Drip Tray

PRODUCT	DESCRIPTION	DIMS	MIN TRIM	CAB	FINISH	SLP
SBDT-2730-A-1	Drip Tray	28-1/2" (724 mm) W x 23-1/4" (591 mm) D x 3/4" (19 mm) H	25-1/2" (648 mm) x 21-1/2" (546 mm)	SB27-30	Almond	$64.99
SBDT-3336-A-1	Drip Tray	34-1/2" (876 mm) W x 23-1/4" (591 mm) D x 3/4" (19 mm) H	31-1/2" (800 mm) x 21-1/2" (546 mm)	SB33-36	Almond	$73.99
SBDT-3942-A-1	Drip Tray	40-1/2" (1029 mm) W x 23-1/4" (591 mm) D x 3/4" (19 mm) H	37-1/2" (953 mm) x 21-1/2" (546 mm)	SB39-42	Almond	$82.99
SBDT-2730-OG-1	Drip Tray	28-1/2" (724 mm) W x 23-1/4" (591 mm) D x 3/4" (19 mm) H	25-1/2" (648 mm) x 21-1/2" (546 mm)	SB27-30	Orion Gray	$64.99
SBDT-3336-OG-1	Drip Tray	34-1/2" (876 mm) W x 23-1/4" (591 mm) D x 3/4" (19 mm) H	31-1/2" (800 mm) x 21-1/2" (546 mm)	SB33-36	Orion Gray	$73.99
SBDT-3942-OG-1	Drip Tray	40-1/2" (1029 mm) W x 23-1/4" (591 mm) D x 3/4" (19 mm) H	37-1/2" (953 mm) x 21-1/2" (546 mm)	SB39-42	Orion Gray	$82.99
SBDT-2730-11-1	Drip Tray	28-1/2" (724 mm) W x 23-1/4" (591 mm) D x 3/4" (19 mm) H	25-1/2" (648 mm) x 21-1/2" (546 mm)	SB27-30	White	$64.99
SBDT-3336-11-1	Drip Tray	34-1/2" (876 mm) W x 23-1/4" (591 mm) D x 3/4" (19 mm) H	31-1/2" (800 mm) x 21-1/2" (546 mm)	SB33-36	White	$73.99
SBDT-3942-11-1	Drip Tray	40-1/2" (1029 mm) W x 23-1/4" (591 mm) D x 3/4" (19 mm) H	37-1/2" (953 mm) x 21-1/2" (546 mm)	SB39-42	White	$82.99

RL Series

Rev-A-Lock® Cabinet Security



- Designed for wood, glass, metal and particleboard cabinets
- White polymer construction, additional colors available with bulk order
- Powerful magnetic locks to keep doors closed
- Unlocking key that disables lock only when you want

Scan for video



RAL-101-1
Rev-A-Lock® Starter Set
(Polymer finish shown)

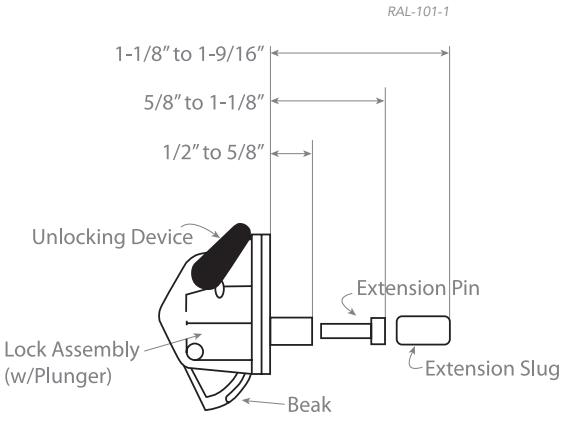

NOTE: The lock will install on thickness of 1/2" (13 mm) to 1-9/16" (40 mm) and operate through wood, glass, metal and particle board.

- Additional colors available via special order (min.500). Contact your Sales Rep for more information.

Rev-A-Lock® Cabinet Security

PRODUCT	DESCRIPTION	DIMS	FINISH	SLP
RAL-101-1	Starter Set (5 Locks & 2 Keys)	1-7/32" (31 mm) W x 1-5/8" (42 mm) D x 1-13/32" (36 mm) H	Polymer	$69.99
RL-201-1	Lock Assembly	1-7/32" (31 mm) W x 1-5/8" (42 mm) D x 1-13/32" (36 mm) H	Polymer	$11.99
RL-202-1	Magnetic Key	1-15/32" (38 mm) W x 1-15/32" (38 mm) D x 1-1/4" (32 mm) H	Polymer	$16.99

Sink Base Door Storage

4SBSU Series



4SBSU-15

- Designed for 30", 36" and 42" sink base cabinet doors
- Natural maple construction with a semi-gloss finish
- Patented adjustable door-mount brackets that provide up to 5" adjustability (US Patent No. 7,204,569)
- TSCA Title VI compliant

Sink Base Door Storage

PRODUCT	DESCRIPTION	DIMS	MCO	CAB	FINISH	SLP
4SBSU-15	Door Storage	10-1/2" (267 mm) W x 5" (127 mm) D x 18-5/8" (474 mm) H	11-5/8" (295 mm) - FF 10-5/8" (270 mm) - FL	SB30	Maple	$110.99
4SBSU-18	Door Storage	13-1/2" (343 mm) W x 5" (127 mm) D x 18-5/8" (474 mm) H	14-3/8" (365 mm) - FF 13-5/8" (346 mm) - FL	SB36	Maple	$117.99
4SBSU-21	Door Storage	16-1/2" (420 mm) W x 5" (127 mm) D x 18-5/8" (474 mm) H	17-1/4" (438 mm) - FF 16-5/8" (422 mm) - FL	SB42	Maple	$131.99

LD-6591 Series

Deluxe Sink Front Tip-Out Trays

- 22", 24" and 30-1/2" trays, almond or white
- Bulk trays available
- Mounts to sink front panels
- (1) standard tray with an integrated ring holder and soap dish
- (1) pair of 50-degree LD pivot hinges



LD-6591-24-15-1



LD-6591-22-11-1
22" Deluxe Tip-Out Tray w/ Hinges
(White finish shown)



LD-6591-30-15-1
30" Deluxe Tip-Out Tray w/ Hinges
(Almond finish shown)

Scan for video

NOTE: Sink Front Trays can also be installed into Vanity Sink Base Cabinets! **Insert 11 for White finish or 15 for Almond finish

Deluxe Tip-Out Tray System (Std./Acc.)			
PRODUCT	**DESCRIPTION**	**DIMS**	**SLP**
LD-6591-22-**-1	Deluxe Tip-Out Tray w/ 45° Hinges	22" (559 mm) W x 2-1/8" (54 mm) D x 3-13/16" (97 mm) H	$22.99
LD-6591-24-**-1	Deluxe Tip-Out Tray w/ 45° Hinges	24-5/16" (618 mm) W x 2-1/8" (54 mm) D x 3-13/16" (97 mm) H	$24.99
LD-6591-30-**-1	Deluxe Tip-Out Tray w/ 45° Hinges	30-7/16" (774 mm) W x 2-1/8" (54 mm) D x 3-13/16" (97 mm) H	$26.99
Bulk Deluxe Tip-Out Trays Only			
LD-6591-22-**-10	(10) Deluxe Tip-Out Trays Only	22" (559 mm) W x 2-1/8" (54 mm) D x 3-13/16" (97 mm) H	$10.99 ea
LD-6591-24-**-10	(10) Deluxe Tip-Out Trays Only	24-5/16" (618 mm) W x 2-1/8" (54 mm) D x 3-13/16" (97 mm) H	$11.99 ea.
LD-6591-30-**-10	(10) Deluxe Tip-Out Trays Only	30-7/16" (774 mm) W x 2-1/8" (54 mm) D x 3-13/16" (97 mm) H	$14.99 ea

Sink Front Tip-Out Trays

65** Series



- 36" or 72" trays, almond or white
- Trimmable to desired length
- Molded polymer end caps
- Key-shaped holes for easy removal and cleaning
- Can be used as a tip-out tray or a spice rack

6551-36-11-52



6551-36-11-50
36" Tip-Out Tray w/ Hinges & End Caps
(White finish shown)



6551-36-15-52
36" Tip-Out Tray w/ Hinges & End Caps
(Almond finish shown)

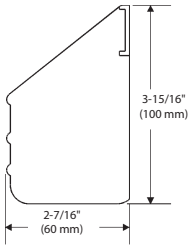

Scan for video

NOTE: **6552 Series End Cap/Hinge sets are individually poly-bagged, bulk packed.
Sink Front Trays can also be installed into Vanity Sink Base Cabinets! **Insert 11 for White finish or 15 for Almond finish

36" Tip-Out Tray with Hinges and End Caps

PRODUCT	DESCRIPTION	DIMS	FINISH	SLP
6551-36-**-52	1 Tray - 2 Pair Hinges & End Caps	36" (915 mm) W x 2-7/16" (62 mm) D x 3-15/16" (101 mm) H	Polymer	$50.99
6551-36-**-50	1 Tray - 1 Pair Hinges & End Caps	36" (915 mm) W x 2-7/16" (62 mm) D x 3-15/16" (101 mm) H	Polymer	$34.99
6551-36-**-ETH	1 Tray - 1 Pair Hinges & End Caps	36" (915 mm) W x 2-7/16" (62 mm) D x 3-15/16" (101 mm) H	Polymer	$50.99
Bulk Components				
6552-97-**-4	(40) Hinges, End Caps, & Adhesive		Polymer	$11.99 pr.
6552-ETH-**-10	(10) Hinges, End Caps, & Adhesive		Polymer	$24.99 pr.
6571-36-**-4	(20) Trays ONLY	36" (915 mm) W x 2-7/16" (62 mm) D x 3-15/16" (101 mm) H	Polymer	$14.99 ea.
6571-72-**-4	(20) Trays ONLY	72" (1829 mm) W x 2-7/16" (62 mm) D x 3-15/16" (101 mm) H	Polymer	$33.99 ea.
Components for Tip-Out or Spice Tray Applications				
ST-97-**-4	(40) End Caps, Screws			$6.99 pr.
6571-60-52	Tube of Adhesive	2 Grams		$6.99
6571-61-52	Bottle of Adhesive	1 Ounce		$21.99

65** Series

Sink Front Tip-Out Trays

- (1) or (20) 11" or 14" tray sets
- Glossy polymer construction, almond or white
- Each set: (1) standard tray, (1) accessory tray with ring holder and soap dish
- Mounts to sink front panels
- (2) pair of hinges
- Bulk (40) 11" or 14" standard or accessory trays ONLY available



6572-11-11-52



NOTE: Sink Front Trays can also be installed into Vanity Sink Base Cabinets! **Insert 11 for White finish or 15 for Almond finish

PRODUCT	DESCRIPTION	DIMS	FINISH	SLP
Sink Front Tip-Out Tray System (Std./Acc.)				
6572-11-**-52	Std./Acc. Trays w/ Hinges	11" (280 mm) W x 2-1/8" (54 mm) D x 3-13/16" (97 mm) H	Polymer	$34.99
6572-14-**-52	Std./Acc. Trays w/ Hinges	14" (356 mm) W x 2-1/8" (54 mm) D x 3-13/16" (97 mm) H	Polymer	$35.99
(20) False Front Tip-Out Tray System (Std./Acc.)				
6572-11-**-4	(20) Std./Acc. Trays w/ Hinges	11" (280 mm) W x 2-1/8" (54 mm) D x 3-13/16" (97 mm) H	Polymer	$28.99 ea.
6572-14-**-4	(20) Std./Acc. Trays w/ Hinges	14" (356 mm) W x 2-1/8" (54 mm) D x 3-13/16" (97 mm) H	Polymer	$28.99 ea.
(40) False Front Tip-Out Trays				
6581-11-**-4	(40) Standard Trays	11" (280 mm) W x 2-1/8" (54 mm) D x 3-13/16" (97 mm) H	Polymer	$6.99 ea.
6581-14-**-4	(40) Standard Trays	14" (356 mm) W x 2-1/8" (54 mm) D x 3-13/16" (97 mm) H	Polymer	$6.99 ea.
6591-11-**-4	(40) Accessory Trays	11" (280 mm) W x 2-1/8" (54 mm) D x 3-13/16" (97 mm) H	Polymer	$6.99 ea.
6591-14-**-4	(40) Accessory Trays	14" (356 mm) W x 2-1/8" (54 mm) D x 3-13/16" (97 mm) H	Polymer	$6.99 ea.

Slim Sink Front Tip-Out Trays

654* Series



6541-36-11-4

- 11″ or 14″ solid trays, almond or white
- 36″ extruded tray, almond or white
- Designed to accommodate minimum clearance openings
- Perfect for hiding sponges and scouring pads out of sight
- (2) pair of 50-degree LD pivot hinges

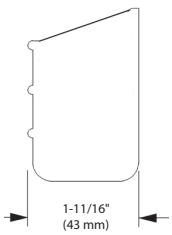

Scan for video

**Insert 11 for White finish or 15 for Almond finish

PRODUCT	DESCRIPTION	DIMS	FINISH	SLP
(2) Slim Series Tip-Out Trays w/ (2) pr. of Hinges				
6542-11-**-52	Tip-Out Tray w/ Hinges	11" (280 mm) W x 1-11/16" (42 mm) D x 3-15/16" (100 mm) H	Polymer	$32.99
6542-14-**-52	Tip-Out Tray w/ Hinges	14" (360 mm) W x 1-11/16" (42 mm) D x 3-15/16" (100 mm) H	Polymer	$37.99
(20) Two-Tray Sets w/ (40) Hinges				
6542-11-**-4	Tip-Out Trays w/ Hinges	11" (280 mm) W x 1-11/16" (42 mm) D x 3-15/16" (100 mm) H	Polymer	$29.99 ea.
6542-14-**-4	Tip-Out Trays w/ Hinges	14" (360 mm) W x 1-11/16" (42 mm) D x 3-15/16" (100 mm) H	Polymer	$31.99 ea.
Kits and Components - (1) Tray, (2) End Caps, (1) pr. of Hinges (1) Tube of Glue				
6541-36-**-52	Tray, End Caps, 2 pr. Hinges	36" (914 mm) W x 1-11/16" (42 mm) D x 3-15/16" (100 mm) H	Polymer	$47.99
6541-36-**-50	Tray, End Caps, 1 pr. Hinges	36" (914 mm) W x 1-11/16" (42 mm) D x 3-15/16" (100 mm) H	Polymer	$29.99
6541-36-**-ETH	Tray, End Caps, 1 pr. Hinges	36" (914 mm) W x 1-11/16" (42 mm) D x 3-15/16" (100 mm) H	Polymer	$46.99
Bulk Components				
6541-36-**-4	(20) Trays only	36" (914 mm) W x 1-11/16" (42 mm) D x 3-15/16" (100 mm) H	Polymer	$15.99 ea.
6542-97-**-4	(40) Hinges & End Caps Sets		Polymer	$12.99 ea.
6542-ETH-**-10	(10) Hinges & End Caps Sets		Polymer	$24.99 ea.

65**/6581 Series

Tip-Out Tray Sets w/ Soft-Close

- 25", 28", 31" and 36" trays, almond, white or stainless-steel
- Soft-close hinges
- Only 3/4" clearance on either side needed for use
- 50-degree opening
- Stiffening ribs provide extra stability and eliminate side play
- Easy installation



6581-31SC-52

Scan for video



6541-36SC-11-50
Slim Sink Front Tip-Out Tray
w/ Soft-Close Hinges
(White finish shown)

NOTE: To order stainless-steel trays with TABS 3-1/4" (83 mm) D order 6591-**-6 (Call for pricing).

PRODUCT	DESCRIPTION	DIMS	FINISH	SLP
Polymer Slim Series Sink Front Tip-Out Tray System w/ Soft-Close Hinges				
6541-36SC-11-50	36" Tray	36" (915 mm) W x 2-5/8" (67 mm) D x 3-13/16" (98 mm) H	White	$45.99
Polymer Tip-Out Trays w/ Soft-Close Hinges				
6551-36SC-11-50	36" Tray	36" (915 mm) W x 2-5/8" (67 mm) D x 3-15/16" (101 mm) H	White	$49.99
6551-36SC-15-50	36" Tray	36" (915 mm) W x 2-5/8" (67 mm) D x 3-15/16" (101 mm) H	Almond	$43.50
Stainless-Steel Tip-Out Trays w/ Soft-Close Hinges				
6581-25SC-52	25" Stainless-Steel Tray	25" (635 mm) W x 2" (51 mm) D x 3" (77 mm) H	Stainless-Steel	$73.99
6581-28SC-52	28" Stainless-Steel Tray	28" (712 mm) W x 2" (51 mm) D x 3" (77 mm) H	Stainless-Steel	$76.99
6581-31SC-52	31" Stainless-Steel Tray	31" (788 mm) W x 2" (51 mm) D x 3" (77 mm) H	Stainless-Steel	$82.99

Stainless Steel Tip-Out Tray Sets

65** Series



- 10" to 31" trays, stainless-steel
- Designed to accommodate minimum clearance openings for large sink applications
- Custom logo or trade name stamping also available (80 tray minimum plus die cost)

NOTE: * Insert "8" for a 2-1/8" Deep Tray or a "4" for a Slim Series, 1-11/16". Ex 6541-10-4 or 6581-10-4 - To order INDIVIDUAL packed trays with (1) pair of hinges, apply the same depth notation (4 or 8) and change the last sequence of numbers to -52. Ex. 6541-10-52 or 6581-10-52. (Call for pricing)

PRODUCT	DESCRIPTION	DIMS	FINISH	SLP
(20) Stainless-Steel Trays w/ (20 pr.) Hinges				
65*1-10-4	10" Tip-Out Tray Sets	10" (254 mm) W x See Note for Depth x 3" (77 mm) H ea.	Stainless-Steel	$27.99 ea.
65*1-11-4	11-1/4" Tip-Out Tray Sets	11-1/4" (286 mm) W x See Note for Depth x 3" (77 mm) H	Stainless-Steel	$27.99 ea.
65*1-13-4	13" Tip-Out Tray Sets	13" (330 mm) W x See Note for Depth x 3" (77 mm) H	Stainless-Steel	$34.99 ea.
65*1-14-4	14-1/4" Tip-Out Tray Sets	14-1/4" (362 mm) W x See Note for Depth x 3" (77 mm) H	Stainless-Steel	$35.99 ea.
65*1-16-4	16" Tip-Out Tray Sets	16" (407 mm) W x See Note for Depth x 3" (77 mm) H	Stainless-Steel	$36.99 ea.
65*1-19-4	19" Tip-Out Tray Sets	19" (483 mm) W x See Note for Depth x 3" (77 mm) H	Stainless-Steel	$37.99 ea.
65*1-22-4	22" Tip-Out Tray Sets	22" (559 mm) W x See Note for Depth x 3" (77 mm) H	Stainless-Steel	$38.99 ea.
65*1-25-4	25" Tip-Out Tray Sets	25" (635 mm) W x See Note for Depth x 3" (77 mm) H	Stainless-Steel	$40.99 ea.
65*1-28-4	28" Tip-Out Tray Sets	28" (711 mm) W x See Note for Depth x 3" (77 mm) H	Stainless-Steel	$41.99 ea.
65*1-31-4	31" Tip-Out Tray Sets	31" (788 mm) W x See Note for Depth x 3" (77 mm) H	Stainless-Steel	$43.99 ea.
(20) Stainless-Steel Trays Only				
65*1-10-5	10" Tip-Out Tray	10" (254 mm) W x See Note for Depth x 3" (77 mm) H	Stainless-Steel	$21.99 ea.
65*1-11-5	11-1/4" Tip-Out Tray	11-1/4" (286 mm) W x See Note for Depth x 3" (77 mm) H	Stainless-Steel	$31.99 ea.
65*1-13-5	13" Tip-Out Tray	13" (330 mm) W x See Note for Depth x 3" (77 mm) H	Stainless-Steel	$21.99 ea.
65*1-14-5	14-1/4" Tip-Out Tray	14-1/4" (362 mm) W x See Note for Depth x 3" (77 mm) H	Stainless-Steel	$21.99 ea.
65*1-16-5	16" Tip-Out Tray	16" (407 mm) W x See Note for Depth x 3" (77 mm) H	Stainless-Steel	$21.99 ea.
65*1-19-5	19" Tip-Out Tray	19" (483 mm) W x See Note for Depth x 3" (77 mm) H	Stainless-Steel	$23.99 ea.
65*1-22-5	22" Tip-Out Tray	22" (559 mm) W x See Note for Depth x 3" (77 mm) H	Stainless-Steel	$21.99 ea.
65*1-25-5	25" Tip-Out Tray	25" (635 mm) W x See Note for Depth x 3" (77 mm) H	Stainless-Steel	$26.99 ea.
65*1-28-5	28" Tip-Out Tray	28" (711 mm) W x See Note for Depth x 3" (77 mm) H	Stainless-Steel	$29.99 ea.
65*1-31-5	31" Tip-Out Tray	31" (788 mm) W x See Note for Depth x 3" (77 mm) H	Stainless-Steel	$32.99 ea.

LD-0220 Series

Soft-Close Pivot Hinge

- 50-degree opening
- Soft-close hinge
- Stiffening ribs provide extra stability and eliminate side play

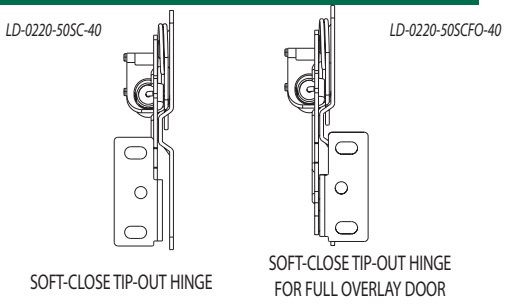

SOFT-CLOSE TIP-OUT HINGE

SOFT-CLOSE TIP-OUT HINGE FOR FULL OVERLAY DOOR

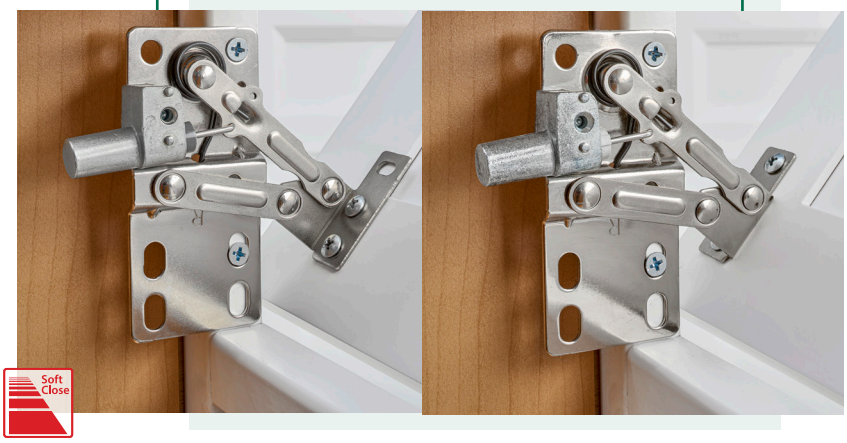

LD-0220-50SC-40 LD-0220-50SCFO-40

(40 pr.) Pivot Hinge w/ Soft-Close

PRODUCT	DESCRIPTION	DIMS	FINISH	SLP
LD-0220-50SC-40	Tip-Out Hinge	1" (26 mm) W x 2-5/8" (67 mm) D x 3-7/8" (99 mm) H	Silver	$30.99 pr.
LD-0220-50SCFO-40	Tip-Out Hinge for Full Overlay	1-1/4" (32 mm) W x 2-5/8" (67 mm) D x 3-7/8" (99 mm) H	Silver	$35.99 pr.

LD-0220 Series

Pivot Hinge

- 50-degree opening
- Face frame or frameless compatible
- Spring design closes firmly and stays closed
- Stiffening ribs provide extra stability



LD-0220-45-40

(40 pr.) Pivot Hinge

PRODUCT	DESCRIPTION	DIMS	FINISH	SLP
LD-0220-50-40	45-degree Pivot Hinge	1" (26 mm) W x 1-3/4" (45 mm) D x 3-7/8" (99 mm) H	Silver	$7.99 pr.

Euro Hinges

6552 Series



- Designed for long sink front false panels
- Adjustable opening of 45 to 90 degrees

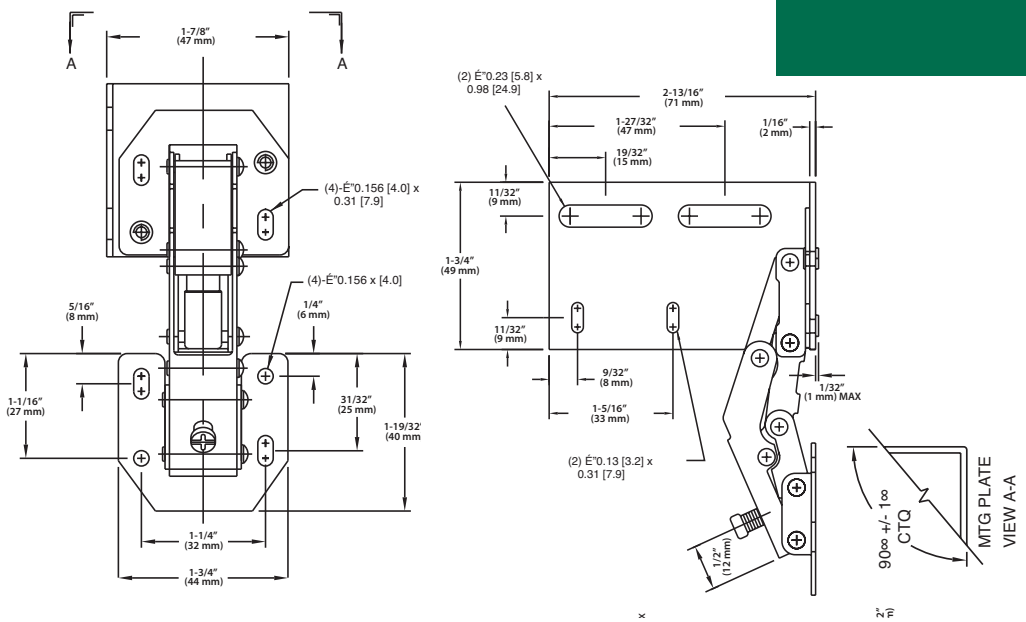

(10 pr.) Euro Hinges

PRODUCT	DESCRIPTION	DIMS	FINISH	SLP
6552-ETH-10	Euro Hinges	See Illustration Above	Silver	$17.99 pr.

548WB Series

Undersink Steel Wire Pullout Organizer

- Designed for 30" sink base cabinets
- Powder chrome wire L-shaped frame
- Easy 4-screw installation
- Mounts to cabinet bottom
- Two-tier design maximizes storage space while working around plumbing



Two-Tier Undersink Steel Wire Pullout Organizer

PRODUCT	DESCRIPTION	DIMS	MCO	CAB	FINISH	SLP
548WB-0919CR-1	Sink Base Organizer	9-1/32" (230 mm) W x 18-5/8" (473 mm) D x 16-3/16" (412 mm) H	9" (229 mm)	SB30	Satin Chrome	$147.99

4SOWC Series

Maple Door-Mount Waste Container

- Designed for 30" vanity base cabinets
- Single 8 L polymer container, metallic silver
- Maple dovetail frame with a semi-gloss finish
- Mounts to cabinet door
- (4) patented pre-assembled adjustable door-mount brackets (US Patent No. 7,204,569)
- (1) white lid
- TSCA Title VI compliant



Maple Door-Mount Vanity Waste Container

PRODUCT	DESCRIPTION	DIMS	MCO	CAB	FINISH	SLP
4SOWC-8-1	Single 8 L	10-3/8" (264 mm) W x 7-3/8" (188 mm) D x 12-5/16" (313 mm) H	12-3/4" (324 mm)	VB30	Silver	$106.99

Sink Base Waste Pullout

5SBWC Series



- Designed for 24" and larger sink base cabinets
- (1) 8 L and (1) 15 L bin, both with handles
- Full-extension, undermount slides w/ soft-close
- Mounts to cabinet floor
- (1) green lid and (1) white lid
- Door-mounting kit available (sold separately)

Scan for video

Wire Undersink Waste Pullout

PRODUCT	DESCRIPTION	DIMS	MCO	CAB	FINISH	SLP
5SBWC-815S-1	(1) 8 L and (1) 15 L	8-15/16" (228 mm) W x 18-19/32" (473 mm) D x 14-1/4" (362 mm) H	9" (229 mm)	SB24	Silver	$185.99
Accessories						
5WB-DMKIT	Door-Mount Kit				Chrome	$42.99

Waste & Cleaning Pullout

5SBWCC Series



- Designed for 24" and larger sink base cabinets
- (1) 8 L with removable rack and (2) 1 L spray bottles
- Full-extension, undermount slides w/ soft-close
- Mounts to cabinet floor
- (1) green lid
- Door-mounting kit available (sold separately)

Scan for video

Wire Undersink Waste & Cleaning Pullout

PRODUCT	DESCRIPTION	DIMS	MCO	CAB	FINISH	SLP
5SBWCC-8S-1	(1) 8 L and (2) 1 L Bottles	8-15/16" (228 mm) W x 18-19/32" (473 mm) D x 14-1/4" (362 mm) H	9" (229 mm)	SB24	Silver	$163.99
Accessories						
5WB-DMKIT	Door-Mount Kit				Chrome	$42.99

5386 Series

U-Shaped Solid Bottom Shelves



(2) units shown *5386-33BCSCFL-FOG*

- Designed for 33" and 36" sink base cabinets
- U-shaped solid bottom shelves, natural maple, gray or orion gray
- Full-extension, undermount slides w/ BLUM soft-close
- Mounts to cabinet floor or side walls
- Pre-assembled door-mount brackets
- Side and bottom mount brackets
- Fits around plumbing
- TSCA Title VI compliant

Designed in cooperation with EIGE

Scan for video

PRODUCT #	SURFACE AREA
30" U-Shaped Shelf	331 sq. in.
33" U-Shaped Shelf	353 sq. in.



Full-extension slides with soft-close



Can be side mounted

PART	Basket Width "W"
5386-30BCSC-**	28-15/16" (735 mm)
5386-33BCSC-**	31-15/16" (811 mm)
5386-30BCSCFL-FOG	28-15/16" (735 mm)
5386-33BCSCFL-FOG	31-15/16" (811 mm)

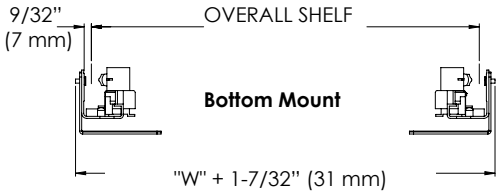

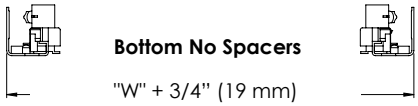



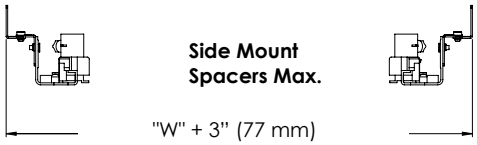



5386-30BCSC-MP
U-Shaped Solid Bottom Shelf
(Natural Maple finish shown)



5386-30BCSC-GR
U-Shaped Solid Bottom Shelf
(Gray finish shown)

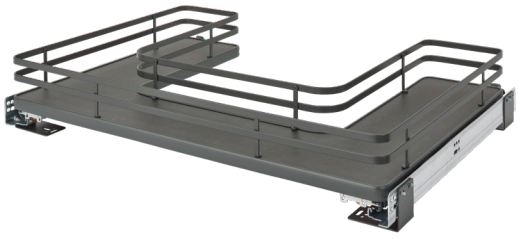

5386-30BCSCFL-FOG
U-Shaped Solid Bottom Shelf
(Orion Gray finish shown)

NOTE: ** Insert "MP" for Maple Shelf or "GR" for Gray Shelf

U-Shaped Solid Bottom Shelf w/ BLUM Soft-Close

PRODUCT	DESCRIPTION	DIMS	MCO	CAB	FINISH	SLP
5386-30BCSC-**	Solid Bottom Shelf	29-11/16" (754 mm) - 32" (813 mm) W x 21-17/32" (547 mm) D x 5-1/16" (129 mm) H	29-11/16" (754 mm)	SB33	Chrome	$580.99
5386-33BCSC-**	Solid Bottom Shelf	32-11/16" (830 mm) - 35" (889 mm) W x 21-17/32" (547 mm) D x 5-1/16" (129 mm) H	32-11/16" (830 mm)	SB36	Chrome	$612.99

Frameless U-Shaped Solid Bottom Shelf w/ BLUM Soft-Close

5386-30BCSCFL-FOG	Solid Bottom Shelf	29-11/16 - 32" (754 - 813 mm) W x 21-17/32" (551 mm) D x 5-1/16" (146 mm) H	29-11/16" (754 mm)	FLSB33	Orion Gray	$605.99
5386-33BCSCFL-FOG	Solid Bottom Shelf	32-11/16 - 35" (830 - 889 mm) W x 21-17/32" (551 mm) D x 5-1/16" (146 mm) H	32-11/16" (830 mm)	FLSB36	Orion Gray	$630.99

5786 Series

U-Shaped Wire Bottom Shelves



(2) units shown

5786-33CR

- Designed for 33" and 36" sink base cabinets
- U-shaped chrome wire bottom shelves
- Full-extension, ball-bearing slides w/ soft-close
- Mounts to cabinet floor or side walls
- Pre-assembled door-mount brackets
- Side and bottom mount brackets
- Fits around plumbing

PRODUCT #	SURFACE AREA
30" U-Shaped Shelf	360 sq. in.
33" U-Shaped Shelf	382 sq. in.

MOUNTING BRACKET OPTIONS

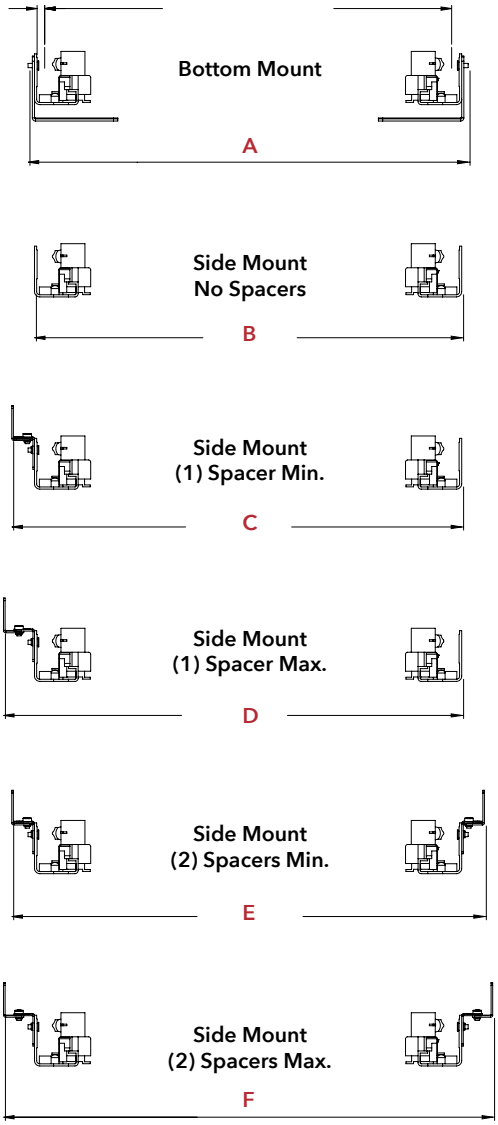



Door mountable with included door-mount brackets

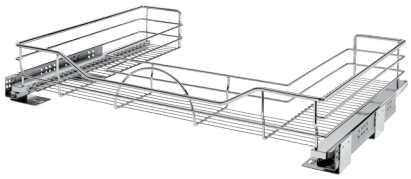

5786-33CR
U-Shaped Wire Bottom Shelf

PART	A	B	C	D	E	F
5786-30CR	11-15/16" (303 mm)	11-1/2" (292 mm)	12-5/16" (313 mm)	12-11/16" (322 mm)	13-1/8" (333 mm)	13-7/8" (352 mm)
5786-33CR	14-15/16" (379 mm)	14-1/2" (368 mm)	15-5/16" (389 mm)	15-11/16" (399 mm)	16-1/8" (410 mm)	16-7/8" (429 mm)

U-Shaped Wire Bottom Shelf w/ Ball-Bearing Soft-Close

PRODUCT	DESCRIPTION	DIMS	MCO	CAB	FINISH	SLP
5786-30CR	Wire Bottom Shelf	29-3/8 - 31-3/4" (747 - 807 mm) W x 21-3/4" (553 mm) D x 5-5/16" (135 mm) H	29-3/8" (746 mm) - FF 29-3/8" (746 mm) - FL	SB33	Chrome	$404.99
5786-33CR	Wire Bottom Shelf	32-3/8 - 34-3/4" (823 - 883 mm) W x 21-3/4" (553 mm) D x 5-5/16" (135 mm) H	32-3/8" (822 mm) - FF 32-3/8" (822 mm) - FL	SB36	Chrome	$434.99

441 Series

Maple L-Shaped Vanity Organizer

blum

- Designed for 24″ and 30″ vanity sink base cabinets
- L-shaped natural maple dovetail frame with a semi-gloss finish
- (4) shelves with non-skid vinyl lining on lower level
- Full-extension, undermount slides w/ BLUM soft-close
- (6) polycarbonate bins for upper level
- Mounts to cabinet floor
- Patented design (US Patent No. D854,359)
- Patented mounting straps (US Patent No. 9,756,941)
- TSCA Title VI compliant



441-15VSBSC-1



441-12VSBSC-1
Vanity Organizer

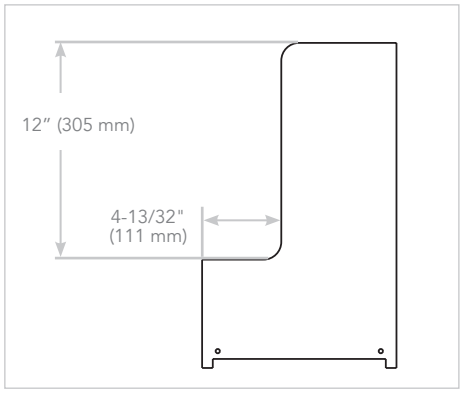

PIPE CLEARANCE DIMENSIONS
(For both units)

Scan for video

L-Shaped Vanity Organizers w/ BLUM Soft-Close

PRODUCT	DESCRIPTION	DIMS	MCO	CAB	FINISH	SLP
441-12VSBSC-1	Vanity Organizer	8-1/2″ (216 mm) W x 18-3/4″ (477 mm) D x 18-7/8″ (480 mm) H	9″ (229 mm)	VSB24	Maple	$445.99
441-15VSBSC-1	Vanity Organizer	11-21/32″ (297 mm) W x 18-3/4″ (477 mm) D x 18-7/8″ (480 mm) H	12″ (305 mm)	VSB30	Maple	$538.99

Maple U-Shaped Vanity Pullout

486 Series



486-30VSBSC-BM-1 *(2) units shown*

- Designed for 30" vanity sink base cabinets, but works great in standard depth cabinets as well
- Natural maple construction with a semi-gloss finish
- Full-extension, undermount slides w/ BLUM soft-close
- Mounts to cabinet floor or side walls
- Side and bottom mount brackets
- (4) adjustable dividers, (1) 8 L waste container w/ white lid (BM), (2) removable polycarbonate bins (SM)
- Non-skid vinyl lining
- TSCA Title VI compliant



486-30VSBSC-BM-1
Maple U-Shaped Pullout
w/ (4) Adjustable Dividers and
(1) 8 L. Container
(Bottom mount unit shown)



486-30VSBSC-SM-1
Maple U-Shaped Pullout
w/ (4) Adjustable Dividers and
(2) Acrylic Bins
(Side mount unit shown)

Scan for video

PRODUCT #	SURFACE AREA
Maple U-Shaped Shelf	265 sq. in.

U-Shaped Vanity Pullout w/ BLUM Soft-Close

PRODUCT	DESCRIPTION	DIMS	MCO	CAB	FINISH	SLP
486-30VSBSC-BM-1	Bottom Mount Pullout	25-21/32" (652 mm) W x 18-11/16" (475 mm) D x 14-1/4" (362 mm) H	25" (635 mm) - FF 25-3/4" (654 mm) - FL	VSB30	Maple	$462.99
486-30VSBSC-SM-1	Side Mount Pullout	27-9/16 - 28-3/4" (700 - 731 mm) W x 19 - 20-3/4" (483 - 528 mm) D x 6-1/2" (166 mm) H	25" (635 mm) - FF 25" (635 mm) - FL	VSB30	Maple	$434.99

544 Series

Undersink Cleaning Caddy

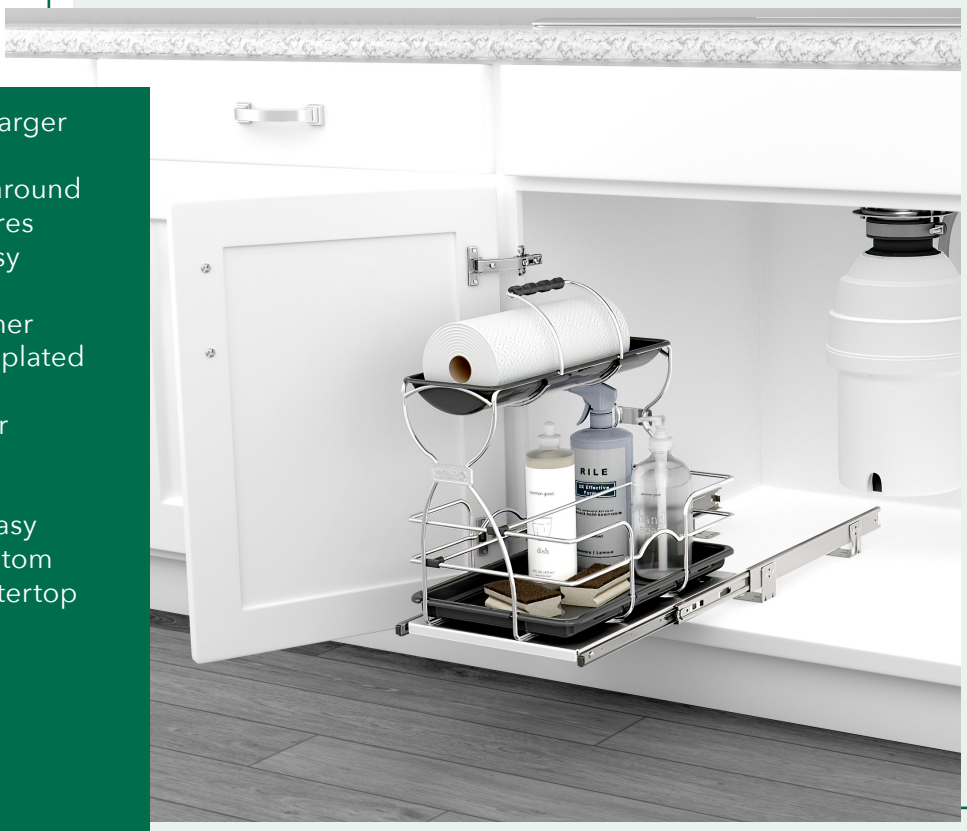

- Designed for 30″ and larger sink base cabinets
- Reversible design fits around various plumbing fixtures
- Fully removable for easy carrying
- (2) easy-to-clean polymer shelves with a chrome-plated wire frame
- Mounts to cabinet floor
- Universal mounting, non-handed hardware
- Robust feet allow for easy transportation and bottom bumpers protect countertop surfaces



Removable caddy for easy transport

Undersink Cleaning Caddy

PRODUCT	DESCRIPTION	DIMS	MCO	FINISH	SLP
544-12KD-1	Cleaning Caddy	11-7/8″ (302 mm) W x 15-29/32″ (404 mm) D x 18-15/32″ (470 mm) H	12″ (305 mm)	Chrome	$171.99







BASE SOLUTIONS

STORAGE STARTS**HERE**

Most of our organizational solutions are designed for base cabinet applications, so you always have a versatile list of innovative products to choose from. From face frame to frameless, rest assured we have the perfect product sized for your type of cabinet. These popular base cabinet accessories are designed with the same superior quality you have come to expect from Rev-A-Shelf®.

PROP 65 WARNING FOR CALIFORNIA RESIDENTS

WARNING: These products can expose you to chemicals such as formaldehyde, lead or styrene, which are known to the State of California to cause cancer and birth defects or other reproductive harm. For more information go to www.P65Warnings.ca.gov

REV-A-SHELF®

Innovation through *Organization*™

4SSB Series

Stainless-Steel Baskets

NEW!

- Designed for 15" and 18" base cabinets
- Natural maple or walnut construction with either stainless-steel or black accents
- Unique perforated design allows for proper ventilation when storing produce
- Installs easily with trim-to-fit side rails and (6) No. 8 flat head screws (not included, length is based on cabinet construction)
- Intended for use without cabinet door
- Stainless-steel is rust-resistant
- TSCA Title VI compliant



4SSB-15-MPMB





Walnut with stainless-steel finish

Maple Produce Pullout Baskets					
PRODUCT	DESCRIPTION	DIMS	MCO	CAB	SLP
4SSB-15-MP	Stainless-Steel Produce Basket	14-11/16" (373 mm) W x 21-1/4" (540 mm) D x 8-13/32" (214 mm) H	12" (305 mm)	B15	$247.99
4SSB-15-MPMB	Black Produce Basket	14-11/16" (373 mm) W x 21-1/4" (540 mm) D x 8-13/32" (214 mm) H	12" (305 mm)	B15	$247.99
4SSB-18-MP	Stainless-Steel Produce Basket	17-11/16" (450 mm) W x 21-1/4" (540 mm) D x 8-13/32" (214 mm) H	15" (381 mm)	B18	$271.99
4SSB-18-MPMB	Black Produce Basket	17-11/16" (450 mm) W x 21-1/4" (540 mm) D x 8-13/32" (214 mm) H	15" (381 mm)	B18	$271.99
Walnut Produce Pullout Baskets					
4SSB-15-WN	Stainless-Steel Produce Basket	14-11/16" (373 mm) W x 21-1/4" (540 mm) D x 8-13/32" (214 mm) H	12" (305 mm)	B15	$330.99
4SSB-15-WNMB	Black Produce Basket	14-11/16" (373 mm) W x 21-1/4" (540 mm) D x 8-13/32" (214 mm) H	12" (305 mm)	B15	$330.99
4SSB-18-WN	Stainless-Steel Produce Basket	17-11/16" (450 mm) W x 21-1/4" (540 mm) D x 8-13/32" (214 mm) H	15" (381 mm)	B18	$371.99
4SSB-18-WNMB	Black Produce Basket	17-11/16" (450 mm) W x 21-1/4" (540 mm) D x 8-13/32" (214 mm) H	15" (381 mm)	B18	$371.99

Glideware™ Pullout

GLD Series



GLD-W22-BC-7

- Designed for 18″ and 24″ base cabinets
- Natural maple dovetail construction with a semi-gloss finish
- Full-extension with 3/4″ over-travel, undermount slides w/ BLUM MOVENTO soft-close
- Up to (220) pre-drilled peg holes
- (4) matching, press-in pegs
- Top shelf holds (1) lid organizer for 18″ and (2) lid organizers for 24″
- Mounts to cabinet floor
- TSCA Title VI compliant



Pantry application

Scan for video

NOTE: Dimensions are without the optional rear mounting bracket. Rear mounting bracket is 6-1/4″ (159 mm) wide and adds 3/4″ (19 mm) to the depth, and 13/16″ (20 mm) to the height.

MCO dimensions and CAB recommendations are dependent on what accessories you intend on hanging on the product. Typical cookware will fit in B18.

PRODUCT	DESCRIPTION	DIMS	CAB	FINISH	SLP
Glideware™ Pullout w/ (5 or 7) Short Hooks					
GLD-W22-SC-7	22″ Glideware™	4″ (102 mm) W x 22″ (559 mm) D x 4-1/8″ (105 mm) H	FHB18	Maple	$180.99
Glideware™ Pullout w/ BLUM Soft-Close and (5 or 7) Long Hooks					
GLD-W22-BC-7	22″ Glideware™	6″ (153 mm) W x 22″ (559 mm) D x 5-1/16″ (129 mm) H	FHB18	Maple	$367.99

596 Series

U-Shaped Tray Organizer

- Available in 10" height
- Chrome-plated round wire
- Mounts to cabinet floor
- Easy 4-screw installation
- Use multiple to create custom storage space



Chrome Wire U-Shaped Tray Organizer

PRODUCT	DESCRIPTION	DIMS	MCO	FINISH	SLP
596-10CR-52	U-Shaped Tray Divider	3" (77 mm) W x 11-7/8" (302 mm) D x 10" (254 mm) H	3-1/4" (83 mm)	Chrome	$23.99

597 Series

Tray Divider w/ Clips

- Available in 12" height
- Chrome-plated or powder-coated white round wire
- Mounts to cabinet floor and rear wall
- Includes (4) screw-in clips and fasteners each
- Use multiple to create custom storage space



PRODUCT	DESCRIPTION	DIMS	FINISH	SLP
Wire Tray Divider				
597-12-52	Tray Divider with Clips	3/4" (20 mm) W x 19-21/32" (500 mm) D x 12" (305 mm) H	White Wire	$14.99
(10) White Wire Tray Dividers				
597-12-10	(10) Tray Dividers with Clips		White Wire	$10.99 ea.
Chrome Wire Tray Divider				
597-12CR-52	Tray Divider with Clips	3/4" (20 mm) W x 19-21/32" (500 mm) D x 12" (305 mm) H	Chrome Wire	$16.99
(10) Chrome Wire Tray Dividers				
597-12CR-10	(10) Tray Dividers with Clips		Chrome Wire	$13.99 ea.

Chrome Tray Divider

LD-597 Series



LD-597-18CR-1

- Available in 12″ and 18″ height
- Chrome-plated round wire
- Mounts to cabinet floor and rear wall
- Use multiple to create custom storage space

Chrome Wire Tray Divider

PRODUCT	DESCRIPTION	DIMS	FINISH	SLP
LD-597-12CR-1	12" Chrome Tray Divider	1/4″ (6 mm) W x 20" (508 mm) D x 12" (305 mm) H	Chrome	$17.99
LD-597-18CR-1	18" Chrome Tray Divider	1/4″ (6 mm) W x 20" (508 mm) D x 18" (458 mm) H	Chrome	$18.99
(10) Chrome Wire Tray Dividers				
LD-597-12CR-10	(10) 12" Chrome Tray Dividers	1/4″ (6 mm) W x 20" (508 mm) D x 12" (305 mm) H	Chrome	$14.99 ea.
LD-597-18CR-10	(10) 18" Chrome Tray Dividers	1/4″ (6 mm) W x 20" (508 mm) D x 18" (458 mm) H	Chrome	$17.99 ea.

5WB* Series

Chrome Wire Pullout Shelves



5WB2-1822CR-1

5WB1

- Designed for 12″, 15″, 18″, 21″, 24″ and 27″ base cabinets
- Chrome-plated round wire frame ideal for organizing bulky items
- Full-extension, ball-bearing slides available in 18″, 20″ and 22″ depths
- Easy 4-screw installation
- Door-mount brackets available (sold separately)

5WB2

- Designed for 12″, 15″, 18″, 21″, 24″ and 27″ base cabinets
- Chrome-plated round wire
- Full-extension ball-bearing slides
- 7-screw installation
- (3) adjustable heights
- Mounts to cabinet floor, side and rear wall
- Telescoping rear mounting bracket
- U-shaped support bracket
- Door-mount brackets available (sold separately)



Door-mount kit, sold separately



Adjustable rear mounting bracket



Top-down view of U-shaped support brackets

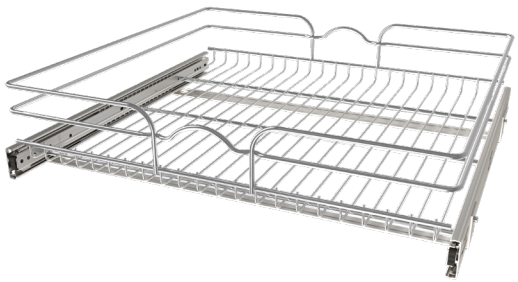

5WB1-2422CR-1
Single Chrome Wire Pullout
(Shelf for base 24" shown)

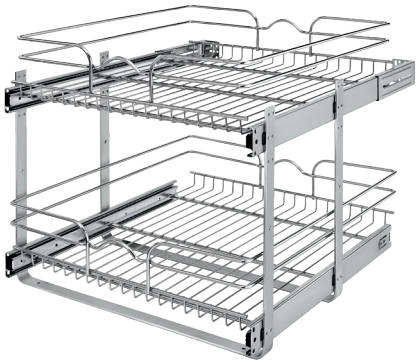

5WB2-2122CR-1
Two-Tier Chrome Wire Pullout
(Shelves for base 21" shown)

Chrome Wire Pullout Shelf

PRODUCT	DESCRIPTION	DIMS	MCOFF	CAB	FINISH	SLP
5WB1-1220CR-1	Pullout Shelf	11-1/2" (293 mm) W x 19-3/4" (502 mm) D x 5-9/16" (142 mm) H	11-1/2" (292 mm)	B15	Chrome	$114.99
5WB1-1520CR-1	Pullout Shelf	14-1/2" (369 mm) W x 19-3/4" (502 mm) D x 5-9/16" (142 mm) H	14-1/2" (368 mm)	B18	Chrome	$124.99
5WB1-1820CR-1	Pullout Shelf	17-1/2" (445 mm) W x 19-3/4" (502 mm) D x 5-9/16" (142 mm) H	17-1/2" (445 mm)	B21	Chrome	$139.99
5WB1-2120CR-1	Pullout Shelf	20-1/2" (521 mm) W x 19-3/4" (502 mm) D x 5-9/16" (142 mm) H	20-1/2" (521 mm)	B24	Chrome	$151.99
5WB1-1222CR-1	Pullout Shelf	11-1/2" (293 mm) W x 22" (559 mm) D x 5-9/16" (142 mm) H	11-1/2" (292 mm)	B15	Chrome	$122.99
5WB1-1522CR-1	Pullout Shelf	14-1/2" (369 mm) W x 22" (559 mm) D x 5-9/16" (142 mm) H	14-1/2" (368 mm)	B18	Chrome	$133.99
5WB1-1822CR-1	Pullout Shelf	17-1/2" (445 mm) W x 22" (559 mm) D x 5-9/16" (142 mm) H	17-1/2" (445 mm)	B21	Chrome	$146.99
5WB1-2122CR-1	Pullout Shelf	20-1/2" (521 mm) W x 22" (559 mm) D x 5-9/16" (142 mm) H	20-1/2" (521 mm)	B24	Chrome	$157.99
5WB1-2422CR-1	Pullout Shelf	23-1/2" (597 mm) W x 22" (559 mm) D x 5-9/16" (142 mm) H	23-1/2" (597 mm)	B27	Chrome	$171.99
Two-Tier Chrome Wire Pullout Shelves						
5WB2-0922CR-1	Pullout Shelves	8-3/4" (223 mm) W x 22-1/4" (566 mm) D x 16-1/4 - 19" (413 - 483 mm) H	8-1/2" (216 mm)	B12	Chrome	$219.99
5WB2-1222CR-1	Pullout Shelves	11-3/4" (299 mm) W x 22-1/4" (566 mm) D x 16-1/4 - 19" (413 - 483 mm) H	11-1/2" (292 mm)	B15	Chrome	$242.99
5WB2-1522CR-1	Pullout Shelves	14-3/4" (375 mm) W x 22-1/4" (566 mm) D x 16-1/4 - 19" (413 - 483 mm) H	14-1/2" (368 mm)	B18	Chrome	$256.99
5WB2-1822CR-1	Pullout Shelves	17-3/4" (451 mm) W x 22-1/4" (566 mm) D x 16-1/4 - 19" (413 - 483 mm) H	17-1/2" (445 mm)	B21	Chrome	$280.99
5WB2-2122CR-1	Pullout Shelves	20-3/4" (528 mm) W x 22-1/4" (566 mm) D x 16-1/4 - 19" (413 - 483 mm) H	20-1/2" (521 mm)	B24	Chrome	$299.99
5WB2-2422CR-1	Pullout Shelves	23-3/4" (604 mm) W x 22-1/4 - 27" (566 - 686 mm) D x 16-1/4 - 19" (413 - 483 mm) H	23-1/2" (597 mm)	B27	Chrome	$328.99
Accessories						
5WB-DMKIT	Door-Mount Kit for Wire Pullout				Chrome	$42.99

5CW2 Series

Two-Tier Cookware Organizer

- Designed for 15" and 24" base cabinets
- Chrome-plated wire frame
- (2) slide configurations:
  - Full-extension ball-bearing slides
  - Full-extension, ball-bearing slides w/ soft-close
- Independently operating shelves accommodate a variety of cookware sizes and brands
- Top tier organizes lids
- Bottom tier with adjustable dividers stores a variety of larger pots and pans
- Mounts to cabinet floor, side and rear wall
- US Patent No. D588,415
- U-shaped bracket for added support
- Door-mount brackets available (sold separately)



5CW2-2122-CR

Scan for video

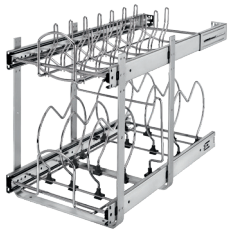

5CW2-1222-CR
Cookware Organizer
Holds (7) Lids

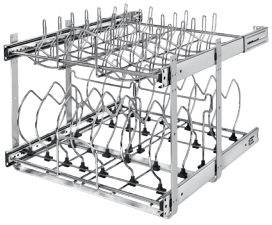

5CW2-2122-CR
Cookware Organizer
Holds (14) Lids



Door-mount kit, sold separately

Two-Tier Cookware Organizer Pullout

PRODUCT	DESCRIPTION	DIMS	MCO	CAB	FINISH	SLP
5CW2-1222-CR	Cookware Organizer	11-3/4" (299 mm) W x 22" (559 mm) D x 18" (458 mm) H	11-1/2" (292 mm)	B15	Chrome	$225.99
5CW2-2122-CR	Cookware Organizer	20-3/4" (528 mm) W x 22" (559 mm) D x 18-1/8" (461 mm) H	20-1/2" (521 mm)	B24	Chrome	$372.99
Two-Tier Cookware Organizer w/ Ball-Bearing Soft-Close						
5CW2-1222SC-CR	Cookware Organizer	11-3/4" (299 mm) W x 22" (559 mm) D x 18" (458 mm) H	11-1/2" (292 mm)	B15	Chrome	$288.99
5CW2-2122SC-CR	Cookware Organizer	20-3/4" (528 mm) W x 22" (559 mm) D x 18-1/8" (461 mm) H	20-1/2" (521 mm)	B24	Chrome	$448.99
Accessories						
5WB-DMKIT	Door-Mount Kit				Chrome	$42.99

Two-Tier Cookware Organizer

4CW2 Series



- Designed for 18″ and 24″ base cabinets
- Natural maple dovetail construction with a semi-gloss finish
- Full-extension with 3/4″ over-travel, undermount slides w/ BLUM MOVENTO soft-close
- Up to (220) pre-drilled peg holes
- (4) matching, press-in pegs
- Top shelf holds (1) lid organizer for 18″ and (2) lid organizers for 24″
- Mounts to cabinet floor
- TSCA Title VI compliant

4CW2-24SC-1



4CW2-18SC-1
Maple Cookware Organizer



Customizable

Scan for video

Wood Two-Tier Base Organizer Pullout w/ BLUM Soft-Close

PRODUCT	DESCRIPTION	DIMS	MCO	CAB	FINISH	SLP
4CW2-18SC-1	Cookware Organizer	14-1/2″ (369 mm) W x 22-1/4″ (566 mm) D x 18-7/32″ (464 mm) H	14-1/2″ (368 mm)	B18	Maple	$733.99
4CW2-24SC-1	Cookware Organizer	20-1/2″ (521 mm) W x 22-1/4″ (566 mm) D x 18-7/32″ (464 mm) H	20-1/2″ (521 mm)	B24	Maple	$868.99

4CDS Series

Casserole Dish Organizer

- Designed for 18″ and 24″ base cabinets
- Natural maple dovetail construction with a semi-gloss finish
- Full-extension with 3/4″ over-travel, undermount slides w/ BLUM MOVENTO soft-close
- Customize drawer compartment with included removable dividers
- Up to (6) dividers and (12) clips
- Mounts to cabinet floor
- TSCA Title VI compliant



4CDS-24SC-1



4CDS-18SC-1
Casserole Dish Organizer
(18″ version shown)

Casserole Dish Organizer w/ BLUM Soft-Close

PRODUCT	DESCRIPTION	DIMS	MCO	CAB	FINISH	SLP
4CDS-18SC-1	Casserole Dish Organizer w/ (4) Dividers	14-1/2″ (369 mm) W x 22-3/32″ (562 mm) D x 10-1/2″ (267 mm) H	14-1/2″ (368 mm)	B18	Maple	$525.99
4CDS-24SC-1	Casserole Dish Organizer w/ (6) Dividers	20-1/2″ (521 mm) W x 22-3/32″ (562 mm) D x 10-1/2″ (267 mm) H	20-1/2″ (521 mm)	B24	Maple	$623.99

Door-Mount Cutting Board

4DMCB Series



4DMCB-18

- Designed for 15" and 18" base cabinets
- Natural maple support rack with chrome-plated round wire
- Available with a mineral oil treated, maple hardwood cutting board or a Polyethylene cutting board
- Patented adjustable door-mount brackets that provide up to 5" adjustability (US Patent No. 7,204,569)
- TSCA Title VI compliant

Natural Maple Door-Mount Cutting Board

PRODUCT	DESCRIPTION	DIMS	MCO	CAB	FINISH	SLP
4DMCB-15	Cutting Board	10-1/2" (267 mm) W x 2-7/8" (74 mm) D x 16-7/8" (429 mm) H	10-7/8" (305 mm) - FF 10-7/8" (305 mm) - FL	B15	Maple	$138.99
4DMCB-18	Cutting Board	13-1/2" (343 mm) W x 2-7/8" (74 mm) D x 16-7/8" (429 mm) H	13-7/8" (352 mm) - FF 13-7/8" (352 mm) - FL	B18	Maple	$154.99

4WB Series

Swing Out Pantry

- Designed for 36" full height base cabinets
- Kit includes (2) swing out units and (2) door storage units
- Natural maple construction with a semi-gloss finish
- Adjustable interior door and pantry shelves
- Chrome-plated accents
- Industrial piano hinge
- Patented adjustable door-mount brackets that provide up to 5" of adjustability (US Patent No. 7,204,569)
- Center divider not included
- TSCA Title VI compliant



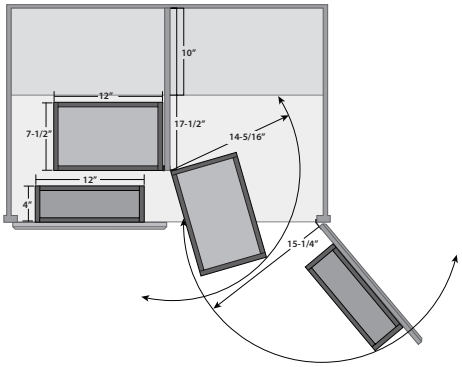



4WBP18-25-KIT
Swing Out Pantry Kit
(2) 4WBSP18-25 and (2) 4WBDP18-25

4WBP18-25-KIT



Chrome top rails can be installed to store items

NOTE: Minimum cabinet height: 4WBP18-25-KIT = 25-3/4" (654 mm) without top rails or 28-3/4" (730 mm) with top rails.

Swing Out Pantry

PRODUCT	DESCRIPTION	DIMS	MCO	CAB	FINISH	SLP
4WBP18-25-KIT	25" Swing Out Pantry Kit - Includes (2) 4WBSP18-25 and (2) 4WBDP18-25		33" (838 mm)	FHB36	Maple	$683.99
4WBSP18-25	(1) 25" Swing Out Pantry Unit w/ Hardware	12" (305 mm) W x 7-1/2" (191 mm) D x 25" (635 mm) H	33" (838 mm)	FHB36	Maple	$181.99
4WBDP18-25	(1) 25" Pantry Door Unit w/ Hardware	12" (305 mm) W x 4" (102 mm) D x 25" (635 mm) H	15-1/4" (387 mm)	FHB36	Maple	$154.99

Base Door Storage

4SBSU Series



4SBSU-15

- Designed for 15", 18" and 21" base cabinet doors
- Natural maple construction with a semi-gloss finish
- Patented adjustable door-mount brackets that provide up to 5" adjustability (US Patent No. 7,204,569)
- Easy 4-screw installation
- TSCA Title VI compliant



Includes removable top tray



Adjustable Mounting Brackets
(US Patent No. 7,204,569)

Door-Mount Base Door Storage

PRODUCT	DESCRIPTION	DIMS	MCO	CAB	FINISH	SLP
4SBSU-15	Door Storage	10-1/2" (267 mm) W x 5" (127 mm) D x 18-5/8" (474 mm) H	12" (305 mm)	B15	Maple	$110.99
4SBSU-18	Door Storage	13-1/2" (343 mm) W x 5" (127 mm) D x 18-5/8" (474 mm) H	15" (381 mm)	B18	Maple	$117.99
4SBSU-21	Door Storage	16-1/2" (420 mm) W x 5" (127 mm) D x 18-5/8" (474 mm) H	18" (457 mm)	B21	Maple	$131.99

4DMKB Series

Door-Mount Tip-Out Knife Block



- Designed for 18" base cabinet doors
- Natural maple construction with a semi-gloss finish
- Upper shelf for additional storage
- Knife block features Flex-Rod Technology that adjusts to hold up to 8 knives securely
- Access slot underneath the knife block to easily remove it for cleaning
- Suggested knife handle length: <6-3/4"
- 5 lb. weight limit
- Magnets to prevent the unit from tilting out when not in use
- Patented pre-assembled door-mount brackets (US Patent No. 7,204,569)
- Can be used with a Rev-A-Lock (RAL-101-1) (sold separately)
- Holds up to 8 knives (not included)
- TSCA Title VI compliant



Magnetic closure ensures secure storage when not in use

Door-Mount Tip-Out Knife Block

PRODUCT	DESCRIPTION	DIMS	MCO	CAB	FINISH	SLP
4DMKB-18-1	Tip-Out Knife Block	13-1/2" (343 mm) W x 5" (127 mm) D x 18-1/2" (470 mm) H	27" (686 mm)	B18	Maple	$275.99

Maple Universal Holder



- Designed for 12" base cabinets or 30" sink base cabinets
- Natural maple construction with a semi-gloss finish
- Easy 4-screw installation
- Ball-bearing slides
- Torsion spring with non-skid coating holds items up to 4-1/2" deep
- Adjustable height accommodates various items
- Universal, non-handed mounting
- Mounts to cabinet side
- Designed for use with step stools, cutting boards, cookbooks and more
- TSCA Title VI compliant

**Stool not included*

Maple Universal Holder

PRODUCT	DESCRIPTION	DIMS	MCO	CAB	FINISH	SLP
4UH-BC-9C	Unviversal Holder	21-21/32" (550 mm) W x 7-5/32" (183 mm) D x 20-1/2" (521 mm) H	9" (229 mm)	B12	Maple	$299.99

444 Series

Base Cabinet Modular Pullout Organizer

- Designed for 9" base cabinets
- Natural maple construction with a semi-gloss finish
- Chrome rails
- (8) included removable, washable polypropylene bins: (1) modular utensil bin, (1) modular knife bin, (6) modular spice bins
- BLUM TANDEM soft-close slides
- Patented door-mount brackets provide 5" of adjustability and include micro-trim adjuster (US Patent No. 8,388,076)
- Unique rear stop for frameless applications
- TSCA Title VI compliant





(8) removable modular bins:
(1) utensil bin, (1) knife bin, (6) spice bins

Base Cabinet Modular Pullout Organizer w/ BLUM Soft-Close

PRODUCT	DESCRIPTION	DIMS	MCO	CAB	FINISH	SLP
444-BCSC-8C	Modular Pullout	8-5/8" (219 mm) W x 21-21/32" (550 mm) D x 19-3/8" (493 mm) H	9" (229 mm)	B12	Maple	$580.99

Food Storage Container Organizer

4FSCO Series



4FSCO-24SC-1

- Designed for 18" and 24" base cabinets
- Natural maple dovetail construction with a semi-gloss finish
- Adjustable clip-on lid dividers (5 w/ 18") (8 w/ 24")
- (7) customizable metal dividers
- Full-extension with 3/4" over-travel,undermount slides w/ BLUM MOVENTO soft-close
- Mounts to cabinet floor
- Patented design (US Patent No. D758,112)
- TSCA Title VI compliant



Clip-on lid dividers



Versatile peg board with (7) metal dividers



4FSCO-18SC-1
Food Storage Container Organizer
(18" version shown)

Scan for video

Food Storage Container Organizer w/ BLUM MOVENTO Soft-Close

PRODUCT	DESCRIPTION	DIMS	MCO	CAB	FINISH	SLP
4FSCO-18SC-1	Food Storage Container Organizer	14-1/2" (369 mm) W x 22-1/4" (566 mm) D x 18-7/8" (480 mm) H	14-1/2" (368 mm)	B18	Maple	$589.99
4FSCO-24SC-1	Food Storage Container Organizer	20-1/2" (521 mm) W x 22-1/4" (566 mm) D x 18-7/8" (480 mm) H	20-1/2" (521 mm)	B24	Maple	$657.99

4WDB Series

Drawer Pullout

- Designed for 15", 18", 21" and 24" base cabinets
- Veneer plywood dovetail construction with a solid wood front
- BLUM 7/8-extension soft-close slides
- Patented slide straps to ease installation (US Patent No. 9,756,941)
- Mounts to cabinet floor
- 4-screw installation
- 75 lb. weight limit
- TSCA Title VI compliant

** Not compatible with 4PIL Pilaster System*

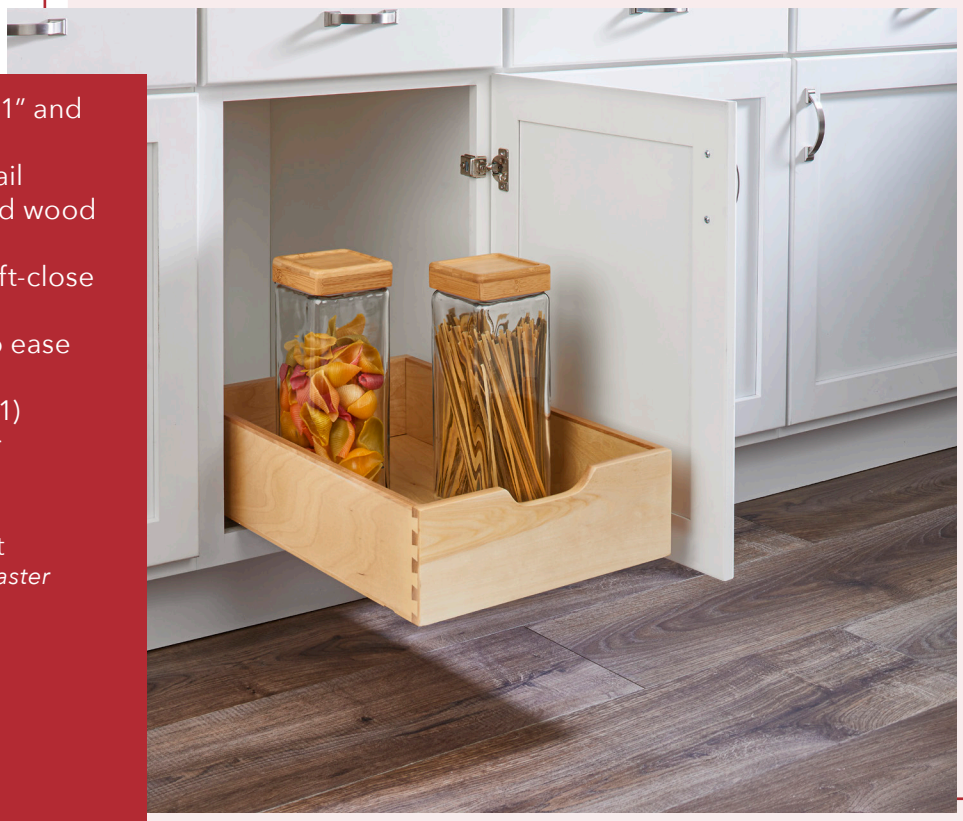

4WDB-1522SC-1



4WDB-15SC-1
Drawer Pullout
(12" version shown)



Easy-release triggers for easy installation and drawer removal

Drawer Pullout w/ BLUM 7/8-Extension Soft-Close

PRODUCT	DESCRIPTION	DIMS	MCO	CAB	FINISH	SLP
4WDB-1219SC-1	Pullout Drawer - Reduced Depth	11-23/32" (298 mm) W x 19-7/32" (488 mm) D x 5-9/16" (142 mm) H	11-3/4" (299 mm)	B15	Maple	$155.99
4WDB-12SC-1	Pullout Drawer	11-23/32" (298 mm) W x 22-3/16" (564 mm) D x 5-9/16" (142 mm) H	11-3/4" (299 mm)	B15	Maple	$161.99
4WDB-15SC-1	Pullout Drawer	14-23/32" (374 mm) W x 22-3/16" (564 mm) D x 5-9/16" (142 mm) H	14-3/4" (375 mm)	B18	Maple	$169.99
4WDB-18SC-1	Pullout Drawer	17-23/32" (450 mm) W x 22-3/16" (564 mm) D x 5-9/16" (142 mm) H	17-3/4" (451 mm)	B21	Maple	$175.99
4WDB-21SC-1	Pullout Drawer	20-23/32" (527 mm) W x 22-3/16" (564 mm) D x 5-9/16" (142 mm) H	20-3/4" (528 mm)	B24	Maple	$194.99

Drawer Pullout

4WDB* Series



4WDB7-24SC-1/4WDB4-18SC-1 *Pictured with our K-Cup Insert, sold separately (three units shown)*

- Designed for 18" and 24" base cabinets
- Veneer plywood dovetail construction
- Full-extension, undermount slides w/ BLUM soft-close
- Tall drawers feature pegboard bottoms with (3, 4) maple pegs and (6, 8) metal dividers
- Mounts to cabinet floor
- Patented slide straps to ease installation (US Patent No. 9,756,941)
- TSCA Title VI compliant

** Not compatible with 4PIL Pilaster System*



4WDB7-24SC-1
Drawer Pullout
(24" with dividers version shown)

Drawer Pullout w/ BLUM Soft-Close

PRODUCT	DESCRIPTION	DIMS	MCO	CAB	FINISH	SLP
4WDB4-18SC-1	Standard Drawer	14-1/16" (358 mm) W x 21-21/32" (550 mm) D x 4-27/32" (124 mm) H	15" (381 mm)	B18	Maple	$339.99
4WDB7-18SC-1	Tall Drawer with dividers	14-1/16" (358 mm) W x 21-21/32" (550 mm) D x 8" (204 mm) H	15" (381 mm)	B18	Maple	$449.99
4WDB4-24SC-1	Standard Drawer	20-1/16" (510 mm) W x 21-21/32" (550 mm) D x 4-27/32" (124 mm) H	21" (533 mm)	B24	Maple	$401.99
4WDB7-24SC-1	Tall Drawer with dividers	20-1/16" (510 mm) W x 21-21/32" (550 mm) D x 8" (204 mm) H	21" (533 mm)	B24	Maple	$517.99

4PIL Series

Wood Pilaster System



4PIL27-24SC-3

NEW!

blum

- Available in (3) rail heights:
  - 19-5/8″
  - 27-3/16″
  - 54-13/32″

  (3) rail widths:
  - 7/8″
  - 1-1/8″
  - 2-3/8″
- Slide bracket adds 1/4″ width to each side (1/2″ overall)
- All rails can be trimmed to a minimum width of 7/8″
- Drawer boxes are easy to adjust with no tools required
- No visible system holes
- Slide brackets install easily with (4) screws per drawer box
- Drawer boxes included with Pilaster System Kits only
- TSCA Title VI compliant



Wooden template for easy installation



Slide brackets install easily with (4) screws per drawer box







Brackets rest on hidden dowels allowing for effortless adjustment while maintaining stability

NOTE: See page 182 to view the Pilaster System in a pantry application.

REV-A-SHELF



Ball-Bearing Slide Brackets
now available!



4PIL27-24SC-3
Pilaster System Kit
((2) Standard, (1) tall shown)



4PIL-20-113-*
Pilaster Kit (Upright Only)

Pilaster System Kits w/ BLUM Soft-Close - Slides, Uprights and Drawers

PRODUCT	DESCRIPTION	DIMS	CAB	FINISH	SLP
4PIL20-18SC-2	(1) Standard, (1) Tall w/ Dividers	16-1/2" (420 mm) W x 21-17/32" (548 mm) D x 19-5/8 - 21-9/32" (499 - 541 mm) H	B18	Maple	$562.99
4PIL20-24SC-2	(1) Standard, (1) Tall w/ Dividers	22-1/2" (572 mm) W x 21-17/32" (548 mm) D x 19-5/8 - 21-9/32" (499 - 541 mm) H	B24	Maple	$598.99
4PIL27-18SC-3	(2) Standard, (1) Tall w/ Dividers	16-1/2" (420 mm) W x 21-17/32" (548 mm) D x 27-3/16 - 28-13/16" (691 - 732 mm) H	FHB18	Maple	$672.99
4PIL27-24SC-3	(2) Standard, (1) Tall w/ Dividers	22-1/2" (572 mm) W x 21-17/32" (548 mm) D x 27-3/16 - 28-27/32" (691 - 733 mm) H	FHB24	Maple	$735.99

Pilaster Kits - Uprights, Slide Brackets & Wood Pilaster Template Only - Single Pack

PRODUCT	DESCRIPTION	DIMS	CAB	FINISH	SLP
4PIL-20-088-1	Pilaster Upright Kit	7/8" (23 mm) W x 3/4" (20 mm) D x 19-5/8" (499 mm) H		Maple	$103.99
4PIL-20-113-1	Pilaster Upright Kit	1-1/8" (29 mm) W x 3/4" (20 mm) D x 19-5/8" (499 mm) H		Maple	$112.99
4PIL-20-238-1	Pilaster Upright Kit	2-3/8" (61 mm) W x 3/4" (20 mm) D x 19-5/8" (499 mm) H		Maple	$139.99
4PIL-27-088-1	Pilaster Upright Kit	7/8" (23 mm) W x 3/4" (20 mm) D x 27-3/16" (691 mm) H		Maple	$122.99
4PIL-27-113-1	Pilaster Upright Kit	1-1/8" (29 mm) W x 3/4" (20 mm) D x 27-3/16" (691 mm) H		Maple	$132.99
4PIL-27-238-1	Pilaster Upright Kit	2-3/8" (61 mm) W x 3/4" (20 mm) D x 27-3/16" (691 mm) H		Maple	$175.99

Uprights, Slide Brackets & (1) Pilaster Template Only - Bulk Pack

4PIL-20-088-10	(10) Pilaster Upright Kits	Maple	$97.99 ea.
4PIL-20-113-10	(10) Pilaster Upright Kits	Maple	$107.99 ea.
4PIL-20-238-10	(10) Pilaster Upright Kits	Maple	$134.99 ea.
4PIL-27-088-10	(10) Pilaster Upright Kits	Maple	$114.99 ea.
4PIL-27-113-10	(10) Pilaster Upright Kits	Maple	$127.99 ea.
4PIL-27-238-10	(10) Pilaster Upright Kits	Maple	$169.99 ea.

Uprights Only - Bulk Pack

4PILU-20-088-40	(40) Individual Uprights	Maple	$18.99 ea.
4PILU-20-113-40	(40) Individual Uprights	Maple	$20.99 ea.
4PILU-20-238-40	(40) Individual Uprights	Maple	$26.99 ea.
4PILU-27-088-40	(40) Individual Uprights	Maple	$20.99 ea.
4PILU-27-113-40	(40) Individual Uprights	Maple	$22.99 ea.
4PILU-27-238-40	(40) Individual Uprights	Maple	$32.99 ea.

Ball-Bearing Slide Bracket

4PIL-HDW-L-200	(200) Pilaster Left Bracket	3/4" (20 mm) W x 19/32" (15 mm) D x 1-15/16" (50 mm) H	$1.99 ea.
4PIL-HDW-R-200	(200) Pilaster Right Bracket	3/4" (20 mm) W x 19/32" (15 mm) D x 1-15/16" (50 mm) H	$1.99 ea.

Undermount Slide Brackets

4PIL-HDW-1	Pilaster Upright Hardware Kit for Slide Attach (1 set of 4 brackets)	Silver	$12.99
4PIL-HDW-10	Pilaster Upright Hardware Kit for Slide Attach (10 sets of 4 brackets)	Silver	$11.99 ea.
4PIL-HDW-160	Pilaster upright hardware kit for slide attach (160 sets of 4 brackets)	Silver	$7.99 ea.

Pilaster Template

4PIL-T-1	Pilaster Installation Templates	Maple	$24.99

Drawer Box w/ BLUM Soft-Close

4WDB4-PIL-18SC-1	(1) Standard Drawer	13-11/32" (339 mm) W x 21" (534 mm) D x 4" (102 mm) H (drawers only)	B18	Maple	$211.99
4WDB7-PIL-18SC-1	(1) Tall Drawer w/ Dividers	13-11/32" (339 mm) W x 21" (534 mm) D x 7" (178 mm) H (drawers only)	B18	Maple	$272.99
4WDB4-PIL-24SC-1	(1) Standard Drawer for 24"	19-11/32" (492 mm) W x 21" (534 mm) D x 4" (102 mm) H (drawers only)	B24	Maple	$232.99
4WDB7-PIL-24SC-1	(1) Tall Drawer w/ Dividers	19-11/32" (492 mm) W x 21" (534 mm) D x 7" (178 mm) H (drawers only)	B24	Maple	$322.99

5375 Series

Wine Base Cabinet Organizer

Soft Close

- Designed for full-height 18" base cabinets w/ 15" minimum cabinet opening
- Chrome-plated round wire
- Gas spring assist soft-open/ soft-close
- Holds (20) wine bottles, 150 lb. capacity
- Universal for left or right handed cabinets



5375-40WR-1CR



5375-40WR-1CR
Wine Base Cabinet Pullout

Designed in cooperation with SIGE

Wine Base Organizer w/ Soft-Close

PRODUCT	DESCRIPTION	DIMS	MCO	CAB	FINISH	SLP
5375-40WR-1CR	Wine Base Organizer	14-1/8" (359 mm) W x 17" (432 mm) D x 25-3/4" (655 mm) H	15" (381 mm) - FF 15" (381 mm) - FL	FHB18	Chrome	$797.99

Side Mount Utensil Pullout

4WDUT Series



4WDUT-24SC-SM-1

- Designed for 18″ and 24″ base cabinets
- Natural maple dovetail construction with a semi-gloss finish
- BLUM soft-close slides
- (1) drawer
- Included accessories; (1) 2 qt. and (2) 1.25 qt. stainless-steel bins and (1) chrome wire basket w/ 18″ or (2) 2 qt. and (3) 1.25 qt. stainless-steel bins and (1) chrome wire basket w/ 24″
- Mounts to cabinet rear and side walls
- TSCA Title VI compliant



4WDUT-18SC-SM-1
Side Mount Utensil Pullout

Side Mount Utensil Pullout w/ BLUM Soft-Close

PRODUCT	DESCRIPTION	DIMS	MCO	CAB	FINISH	SLP
4WDUT-18SC-SM-1	Utensil Pullout	16-13/32 - 17-5/8″ (417 - 448 mm) W x 21-21/32″ (550 mm) D x 8-7/8″ (226 mm) H	15″ (381 mm)	B18	Maple	$346.99
4WDUT-24SC-SM-1	Utensil Pullout	22-13/32 - 23-5/8″ (570 - 600 mm) W x 21-21/32″ (550 mm) D x 8-7/8″ (226 mm) H	21″ (533 mm)	B24	Maple	$454.99

432TB Series

Towel Bar Base Filler Pullout

Soft Close

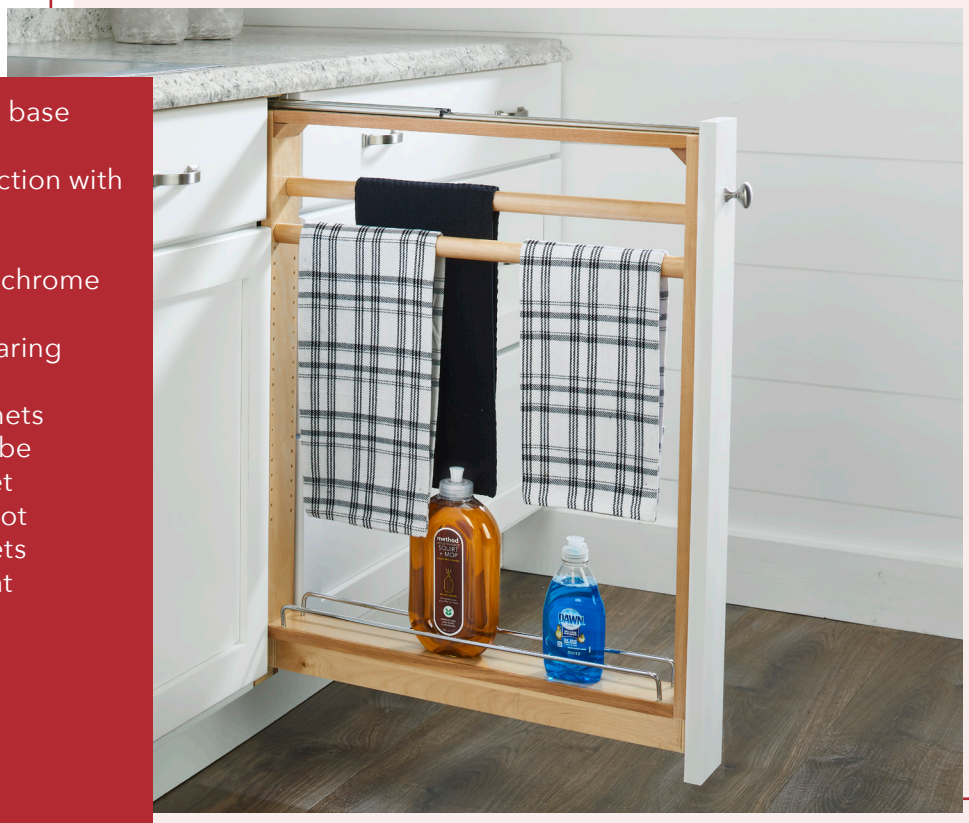

- Designed for 3″ and 6″ base cabinet applications
- Natural maple construction with a semi-gloss finish
- (2) towel bars
- Single static shelf with chrome wire accents
- Full-extension, ball-bearing slides w/ soft-close
- Mounts between cabinets
- Fillers are intended to be installed in new cabinet construction and will not work in existing cabinets
- TSCA Title VI compliant

432TB-BFBBSC-3C

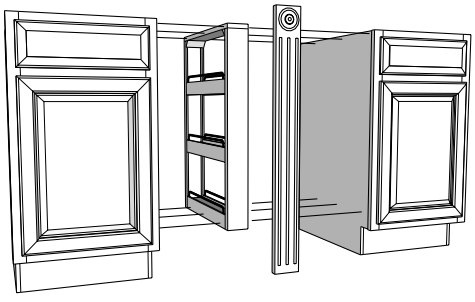

This product installs between two cabinets.
Just add your door front.

Natural Maple Towel Bar Base Cabinet Filler w/ Ball-Bearing Soft-Close

PRODUCT	DESCRIPTION	DIMS	FINISH	SLP
432TB-BFBBSC-3C	3″ Filler	3″ (77 mm) W x 23″ (585 mm) D x 30″ (762 mm) H	Maple	$349.99
432TB-BFBBSC-6C	6″ Filler	6″ (153 mm) W x 23″ (585 mm) D x 30″ (762 mm) H	Maple	$449.99

Base Cabinet Filler

432 Series



432-BFBBSC-3C

- Designed for 3" and 6" base filler applications
- Natural maple construction with a semi-gloss finish
- Full-extension, ball-bearing slides w/ soft-close
- Adjustable shelves with chrome rails
- 3-slide design for 6" base cabinet fillers
- Create a functional storage space behind decorative panels
- Fillers are intended to be installed in new cabinet construction and will not work in existing cabinets
- TSCA Title VI compliant



432-BF-3C
Base Cabinet Filler
(3" version shown)



432-BFBBSC-6C
Base Cabinet Filler
w/ Ball-Bearing Soft-Close
(6" version shown)

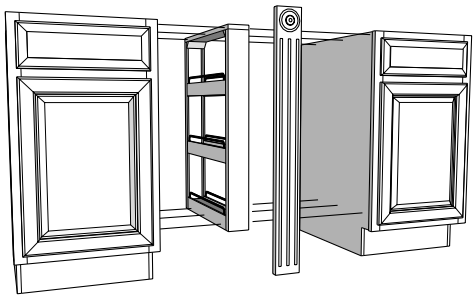

This product installs between two cabinets.
Just add your door front.

NOTE: See page 242 for wall cabinet version.

Base Cabinet Filler w/ Ball-Bearing Soft-Close

PRODUCT	DESCRIPTION	DIMS	FINISH	SLP
432-BFBBSC-3C	3" Base Filler Organizer	3" (77 mm) W x 23" (585 mm) D x 30" (762 mm) H	Maple	$313.99
432-BFBBSC-6C	6" Base Filler Organizer	6" (153 mm) W x 23" (585 mm) D x 30" (762 mm) H	Maple	$441.99

432 Series

BLUM® Base Cabinet Filler

- Designed for 3", 6" and 9" base filler applications
- Natural maple construction with a semi-gloss finish
- Full-extension, undermount slides w/ BLUM soft-close
- Patented undermount soft-close slide system (US Patent No. 8,733,865)
- (2) adjustable shelves with chrome rails
- Fixed middle shelf for added support
- Create a functional storage space behind those decorative panels
- Fillers are intended to be installed in new cabinet construction and will not work in existing cabinets
- TSCA Title VI compliant

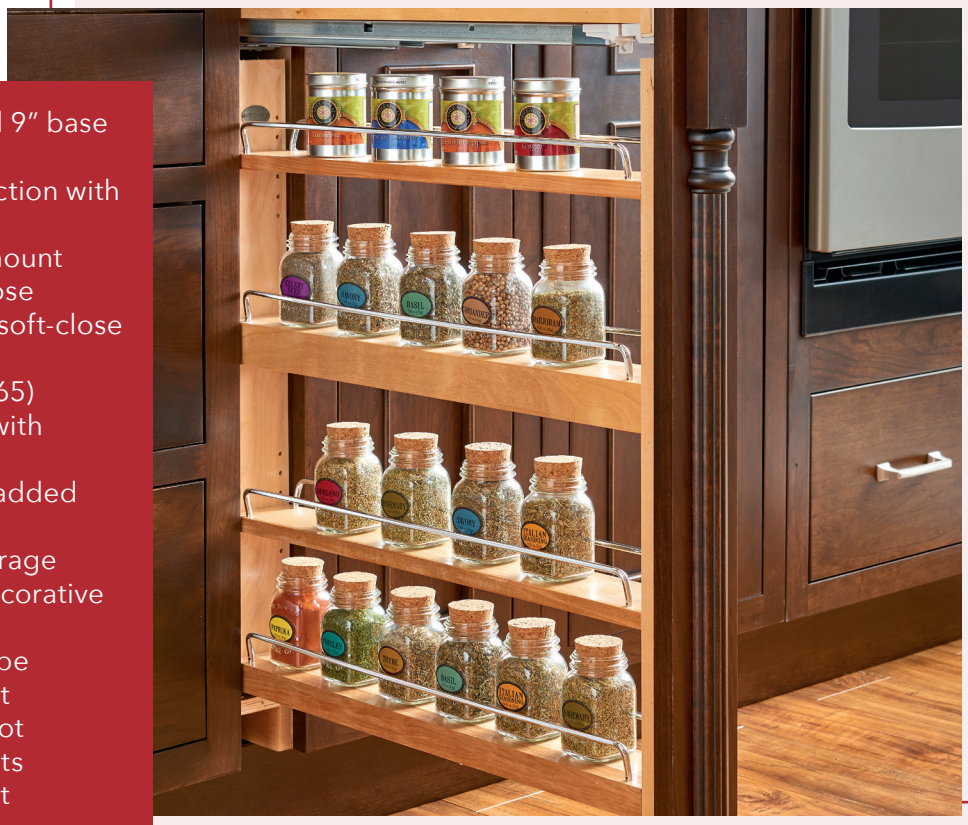

432-BFSC-3C

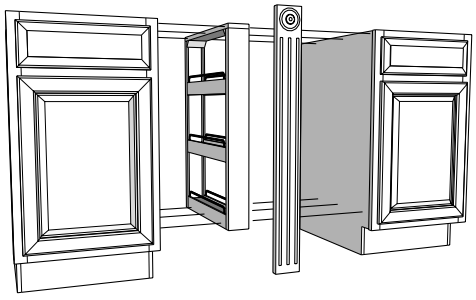

This product installs between two cabinets. Just add your door front.



432-BFSC-6C
Base Cabinet Filler
(6" version shown)



432-BFSC-9C
Base Cabinet Filler
(9" version shown)



Jack screw for door micro-adjustments

Base Cabinet Filler w/ BLUM Soft-Close

PRODUCT	DESCRIPTION	DIMS	FINISH	SLP
432-BFSC-3C	3" Base Filler Organizer	3" (77 mm) W x 23" (585 mm) D x 30" (762 mm) H	Maple	$401.99
432-BFSC-6C	6" Base Filler Organizer	6" (153 mm) W x 23" (585 mm) D x 30" (762 mm) H	Maple	$503.99
432-BFSC-9C	9" Base Filler Organizer	9" (229 mm) W x 23" (585 mm) D x 30" (762 mm) H	Maple	$604.99

Base Organizer Pullout

438 Series



438-BC-3C

- Designed for full height 6" and 9" base cabinets
- Fully assembled natural maple construction with chrome accents
- (2) slide configurations:
  - Full-extension, ball-bearing, slides
  - Full-extension, undermount slides w/ BLUM soft-close
- Patented undermount soft-close slide system (US Patent No. 8,733,865)
- Trimmable to 26-3/8" height for custom cabinets
- Adjustable shelves
- Designed with top slide for complete stability
- Fillers are intended to be installed in new cabinet construction and will not work in existing cabinets
- TSCA Title VI compliant



438-BCSC-6C
Base Organizer
(6" version shown)

NOTE: Our customers asked... so we delivered! We took the best features of our 448 Series Base Organizers and our 432 Series Filler Organizers and created this product specifically for use in full height B6 and B9 cabinets.

PRODUCT	DESCRIPTION	DIMS	MCO	CAB	FINISH	SLP
Base Organizer						
438-BC-3C	Base Organizer for 6"	3" (77 mm) W x 23" (585 mm) D x 27-5/16" (694 mm) H	3" (76 mm)	FHB6	Maple	$275.99
438-BC-6C	Base Organizer for 9"	6" (153 mm) W x 23" (585 mm) D x 27-5/16" (694 mm) H	6" (152 mm)	FHB9	Maple	$406.99
Base Organizer w/ BLUM Soft-Close						
438-BCSC-3C	Base Organizer for 6"	3" (77 mm) W x 23" (585 mm) D x 27-5/16" (694 mm) H	3" (76 mm)	FHB6	Maple	$454.99
438-BCSC-6C	Base Organizer for 9"	6" (153 mm) W x 23" (585 mm) D x 27-5/16" (694 mm) H	6" (152 mm)	FHB9	Maple	$585.99

448 Series

Ball-Bearing Base Cabinet Pullout



448-BCBBSC-8C

Soft Close

All Units:
- Natural maple construction with a semi-gloss finish
- Adjustable shelves with chrome rails
- Patented door-mount brackets provide 5" of adjustability and include micro-trim adjuster (US Patent No. 8,388,076)
- TSCA Title VI compliant

Soft-Close Units:
- Designed for 9"and 12" full height face frame base cabinets
- Full-extension, ball-bearing slides w/ soft-close
- Adjustable rub bushings

Ball-Bearing Units:
- Designed for 9", 12", 15" and 18" full height face frame base cabinets, and 9" full height frameless cabinets
- Patented "tri-slides" which minimize any side-to-side motion (US Patent No. 7,306,301)
- Patented mounting straps (US Patent No. 9,756,941)

Minimum Cabinet Opening

PRODUCT #	MCO FF	MCO FL
448-BCBBSC-5C	5-1/2" (140 mm)	5-1/2" (140 mm)
448-BCBBSC-8C	8-1/2" (216 mm)	8-1/2" (216 mm)
448-BC-5C	5-1/2" (140 mm)	5-1/2" (140 mm)
448-BC-6C	7" (178 mm)	7" (178 mm)
448-BC-8C	8-1/2" (216 mm)	8-1/2" (216 mm)
448-BC-11C	11-1/2" (292 mm)	11-1/2" (292 mm)
448-BC-14C	14-1/2" (368 mm)	14-1/2" (368 mm)

NOTE: See page 216 for wall cabinet version



Adjustable shelves



Adjustable door-mount brackets
(US Patent No: 8,388,076) and jack screw
for precise door alignment



Adjustable rear wall



448-BC-8C
Base Cabinet Pullout
(8" version shown)



448-BCBBSC-5C
Base Cabinet Pullout w/ Soft-Close
(5" version shown)



Adjustable threaded rub
bushings included for
custom applications



Plastic rub bushings
included for 1.5" and 1.75"
face frame applications



IDRB-1
Adjustable Rub Bushing set for inset
applications (1) for each side
(sold separately)

(For inset applications, we recommend our IDRB bushing. The discreet design prevents side-to-side movement and fits behind the frame, eliminating the need for surface drilling, giving you a seamless look and unparalleled stability.)





448-08SC-SRI-1
Spice Rack Insert
(448-BCBBSC-8C version shown)
(sold separately)

PRODUCT	DESCRIPTION	DIMS	CAB	FINISH	SLP
Base Cabinet Pullout w/ Ball-Bearing Soft-Close					
448-BCBBSC-5C	Base Organizer	5" (127 mm) W x 21-21/32" (550 mm) D x 25-1/2" (648 mm) H	FHB9	Maple	$421.99
448-BCBBSC-8C	Base Organizer	8" (204 mm) W x 21-21/32" (550 mm) D x 25-1/2" (648 mm) H	FHB12	Maple	$450.99
Base Cabinet Pullout					
448-BC-5C	Base Organizer	5" (127 mm) W x 22-1/2" (572 mm) D x 25-1/2" (648 mm) H	FHB9	Maple	$299.99
448-BC-6C	Frameless Organizer	6-1/2" (166 mm) W x 22-1/2" (572 mm) D x 25-1/2" (648 mm) H	FHB9	Maple	$311.99
448-BC-8C	Base Organizer	8" (204 mm) W x 22-1/2" (572 mm) D x 25-1/2" (648 mm) H	FHB12	Maple	$341.99
448-BC-11C	Base Organizer	11" (280 mm) W x 22-1/2" (572 mm) D x 25-1/2" (648 mm) H	FHB15	Maple	$533.99
448-BC-14C	Base Organizer	14" (356 mm) W x 22-1/2" (572 mm) D x 25-1/2" (648 mm) H	FHB18	Maple	$601.99
Spice Rack Insert for Base Cabinet Pullout					
448-08SC-SRI-1	For 448-BCBBSC-8C	7" (178 mm) W x 19-7/16" (494 mm) D x 4-7/8" (124 mm) H		Maple	$118.99
448-SR8-1	For 448-BC-8C	7" (178 mm) W x 21" (534 mm) D x 4-7/8" (124 mm) H		Maple	$74.99
448-SR11-1	For 448-BC-11C	10" (254 mm) W x 21" (534 mm) D x 4-7/8" (124 mm) H		Maple	$90.99
Accessories					
IDRB-1	Adjustable Rub Bushing for Inset Applications			Metal	$14.99

448SW Series

Swivel Shelf Pullout

- Designed for 9″ and 12″ full height face frame base cabinets
- Natural maple construction with a semi-gloss finish and chrome accents
- Full-extension, undermount slides w/ BLUM soft-close
- Patent-pending design
- Built-in "Extension Lock"
- Adjustable rear wall
- (2) swivel shelves with built-in self-centering axis system
- Adjustable accessory top shelf
- Chrome accents
- Patented door-mount brackets provide 5″ of door mounting adjustability and include micro door trim adjustment (US Patent No. 8,388,076)
- Mounts to cabinet door and floor
- TSCA Title VI Compliant

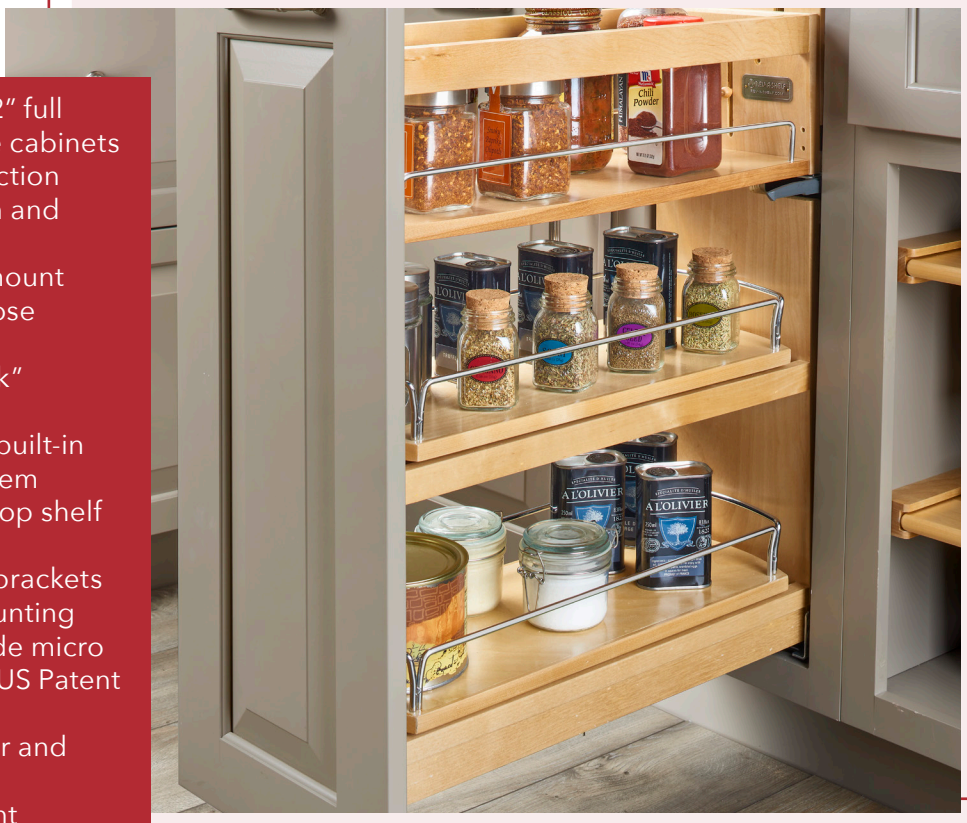

448SW-BCSC-8C







Built-in extension lock

Swivel Shelf Base Cabinet Pullout w/ BLUM Soft-Close

PRODUCT	DESCRIPTION	DIMS	MCO	CAB	FINISH	SLP
448SW-BCSC-5C	Swivel Pullout	5-3/4 - 6″ (147 - 153 mm) W x 22-25/32″ (579 mm) D x 25-5/8″ (652 mm) H	FF: 5-3/4″ (146 mm) FL: 6″ (152 mm)	FHB9	Maple	$616.99
448SW-BCSC-8C	Swivel Pullout	9″ (229 mm) W x 22-25/32″ (579 mm) D x 25-5/8 - 29-1/2″ (652 - 750 mm) H	FF: 8-3/4″ (222 mm) FL: 9″ (229 mm)	FHB12	Maple	$749.99

Sidekick Pullout

448SK Series



448-BSKT-3C

- Designed to ONLY be mounted to 448BCSC Series pullouts*
- Patent-pending design
- Natural maple construction with a semi-gloss finish and chrome accents
- (2) configurations available; Spices or Tray/Foil wrap holder
- Add 3" to the existing compatible* 448 footprint per sidekick (3" sidekick attached to 5" 448 fits in an 8" opening)
- Full-extension, ball-bearing slides w/ soft-close
- Slides independently, providing complete access to the attached 448
- TSCA Title VI compliant

* Not compatible with 448SW, 448-BCBBSC, 448-BC, 448-BDDSC or 448-BC19SC-5C reduced depth pullouts



448-BSKT-3C
Tray Holder Sidekick

Sidekick Pullout

PRODUCT	DESCRIPTION	DIMS	FINISH	SLP
448-BSKT-3C	Tray Holder Sidekick	3" (77 mm) W x 20-3/4" (528 mm) D x 23-15/16" (608 mm) H	Maple	$282.99
448-BSKS-3C	Spice Holder Sidekick	3" (77 mm) W x 20-3/4" (528 mm) D x 23-15/16" (608 mm) H	Maple	$280.99

448 Series

BLUM® Soft-Close Base Cabinet Pullouts

All Units:
- Natural maple construction with a semi-gloss finish
- Patented door-mount brackets provide 5" of adjustability and include a micro-trim adjuster (US Patent No. 8,388,076)
- Adjustable rub bushings
- Full-extension, undermount slides w/ BLUM soft-close
- Patented mounting straps (US Patent No. 9,756,941)
- TSCA Title VI compliant

448-BCSC
- Designed for frameless 9" and 12", face frame 9", 12", 15" and 18" full height and 9", 12" and 15" drawer/door base cabinets
- Adjustable shelves with chrome rails.

448OXO
- Designed for 12" full height base cabinets
- (7) BPA free OXO® Good Grips POP containers - (3) 4.3 qt. - (3) 1.7 qt. - (1) 2.6 qt.

448KB
- Designed for 9", 12" and 15" full height face frame base cabinets, and 12" full height frameless cabinets
- (1) 2 qt. or (1) 2 qt. and (3) 1.25 qt. removable stainless-steel bins
- Knife block's Flex Rod Technology adjusts to hold knives securely
- (4) flexible plastic cutting mats
- Adjustable accessory shelf and lower static shelf with chrome rails

448UT
- Designed for 9" and 12" full height base cabinets
- (3) 1.25 qt. or (3) 2 qt. stainless-steel bins
- Adjustable shelves and rear wall for added stability

448PTH
- Designed for 12" full height face frame base cabinets, and 9" full height frameless cabinets
- Refillable paper towel holder



448-BCSC-8C & 448-08SC-SRI-1

Scan for video

448PTH-BCSC-8C
Paper Towel Pullout
(8" version shown)



448-BDDSC-11C
Drawer/Door Base Cabinet Pullout
(11" version shown)





448-BCSC-9C
Base Cabinet Pullout for Frameless
(9" version shown)



448-BCSCSD-5C
Base Cabinet Pullout
w/ SERVO-DRIVE
(5" version shown)



448-BC19SC-5C
Base Cabinet Pullout,
Reduced Depth
(5" version shown)



448-BDDSC-11C
Base Cabinet Pullout
for Drawer/Door
(11" version shown)

With flexible
cutting mats



448KB-BCSC-8C
Base Cabinet Pullout
w/ Knife Block and Utensil Bin
(8" unit shown)



448OXO-BCSC-8C
Base Cabinet Pullout
w/ OXO® Containers



448UT-BCSC-5C
Base Cabinet Pullout
w/ Utensil Bins
(5" unit shown)



448-08SC-SRI-1
Spice Rack
*(7" version shown,
sold separately)*



448KB-BCSC-11C
Base Cabinet Pullout
w/ Knife Block and
Utensil Bins
(11" unit shown)



448PTH-BCSC-8C
Base Cabinet Pullout
w/ Paper Towel Holder
(8" unit shown)



Adjustable threaded rub
bushings included for
custom applications



Plastic rub bushings
included for 1.5" and 1.75"
face frame applications





Minimum Cabinet Opening **Cont'd**

PRODUCT #	MCO FF	MCO FL
448-BCSC-5C	5-1/2" (140 mm)	6" (152 mm)
448-BC19SC-5C	5-1/2" (140 mm)	6" (152 mm)
448-BCSC-8C	8-1/2" (216 mm)	9" (229 mm)
448-BC19SC-8C	8-1/2" (216 mm)	9" (229 mm)
448-BCSC-11C	11-1/2" (292 mm)	12" (305 mm)
448-BCSC-14C	14-1/2" (368 mm)	15" (381 mm)
448-BCSC-6C	7-1/2" (191 mm)	7-1/2" (191 mm)
448-BCSC-9C	10-1/2" (268 mm)	10-1/2" (268 mm)
448-BCSCSD-5C	5-1/2" (140 mm)	6" (152 mm)
448-BCSCSD-8C	8-1/2" (216 mm)	9" (229 mm)
448-BDDSC-5C	5-1/2" (140 mm)	6" (152 mm)
448-BDDSC-8C	8-1/2" (216 mm)	9" (229 mm)
448-BDDSC-11C	11-1/2" (292 mm)	12" (305 mm)
448KB-BCSC-5C	5-1/2" (140 mm)	6" (152 mm)
448KB-BCSC-6C	7-1/2" (191 mm)	7-1/2" (191 mm)
448KB-BCSC-8C	8-1/2" (216 mm)	9" (229 mm)
448KB-BCSC-9C	10-1/2" (267 mm)	10-1/2" (267 mm)
448KB-BCSC-11C	11-1/2" (292 mm)	12" (305 mm)
448OXO-BCSC-8C	8-1/2" (216 mm)	9" (229 mm)

Specs on the following page

448 Series

PRODUCT #	MCO FF	MCO FL
448UT-BCSC-5C	5-1/2" (140 mm)	6" (152 mm)
448UT-BCSC-6C	7-1/2" (191 mm)	7-1/2" (191 mm)
448UT-BCSC-8C	8-1/2" (216 mm)	9" (229 mm)
448UT-BCSC-9C	10-1/2" (267 mm)	10-1/2" (267 mm)
448UT-BCSC-11C	11-1/2" (292 mm)	12" (305 mm)
448PTH-BCSC-6C	6-5/8" (169 mm)	7-1/8" (181 mm)
448PTH-BCSC-8C	8-1/2" (216 mm)	9" (229 mm)

448KB Scan for video

448UT Scan for video

448OXO Scan for video

448PT Scan for video

448SW Scan for video

Base Cabinet Pullout w/ BLUM Soft-Close for Full-Height

PRODUCT	DESCRIPTION	DIMS	CAB	FINISH	SLP
448-BCSC-5C	Base Organizer	6" (153 mm) W x 21-5/8" (550 mm) D x 25-1/2" (648 mm) H	FHB9	Maple	$443.99
448-BC19SC-5C	Base Organizer*	6" (153 mm) W x 19-5/8" (499 mm) D x 25-1/2" (648 mm) H	FHB9	Maple	$453.99
448-BCSC-8C	Base Organizer	8-3/4" (223 mm) W x 21-5/8" (550 mm) D x 25-1/2" (648 mm) H	FHB12	Maple	$478.99
448-BC19SC-8C	Base Organizer*	8-3/4" (223 mm) W x 19-5/8" (499 mm) D x 25-1/2" (648 mm) H	FHB12	Maple	$540.99
448-BCSC-11C	Base Organizer	11-3/4" (299 mm) W x 21-5/8" (550 mm) D x 25-1/2" (648 mm) H	FHB15	Maple	$601.99
448-BCSC-14C	Base Organizer	14-3/4" (375 mm) W x 21-5/8" (550 mm) D x 25-1/2" (648 mm) H	FHB18	Maple	$670.99
Frameless Base Cabinet Pullout w/ BLUM Soft-Close					
448-BCSC-6C	Base Organizer	7-1/4" (185 mm) W x 21-5/8" (550 mm) D x 25-1/2" (648 mm) H	FLFHB9	Maple	$465.99
448-BCSC-9C	Base Organizer	10-1/4" (261 mm) W x 21-5/8" (550 mm) D x 25-1/2" (648 mm) H	FLFHB12	Maple	$552.99
Base Cabinet Pullout w/ BLUM Soft-Close and SERVO-DRIVE					
448-BCSCSD-5C	Base Organizer	6" (153 mm) W x 22-3/4 - 24-1/4" (578 - 616 mm) D x 25-1/2" (648 mm) H	FHB9	Maple	$1208.99
448-BCSCSD-8C	Base Organizer	8-3/4" (223 mm) W x 22-3/4 - 24-1/4" (578 - 616 mm) D x 25-1/2" (648 mm) H	FHB12	Maple	$1272.99
Base Cabinet Pullout w/ BLUM Soft-Close for Drawer/Door					
448-BDDSC-5C	Base Organizer	6" (153 mm) W x 21-5/8" (550 mm) D x 19-3/8" (493 mm) H	B9	Maple	$335.99
448-BDDSC-8C	Base Organizer	8-3/4" (223 mm) W x 21-5/8" (550 mm) D x 19-3/8" (493 mm) H	B12	Maple	$427.99
448-BDDSC-11C	Base Organizer	11-3/4" (299 mm) W x 21-5/8" (550 mm) D x 19-3/8" (493 mm) H	B15	Maple	$508.99
Spice Rack Insert for Base Cabinet Pullout					
448-08SC-SRI-1	Spice Rack	7" (178 mm) W x 19-7/16" (494 mm) D x 4-7/8" (124 mm) H		Maple	$118.99
448-11SC-SRI-1	Spice Rack	10" (254 mm) W x 19-7/16" (494 mm) D x 4-7/8" (124 mm) H		Maple	$148.99
Base Cabinet Pullout w/ Knife Block and Utensil Bins and BLUM Soft-Close					
448KB-BCSC-5C	Base Organizer w/ (1) 1.25 qt. Bin	6" (153 mm) W x 21-5/8" (550 mm) D x 25-1/2" (648 mm) H	FHB9	Maple	$649.99
448KB-BCSC-8C	Base Organizer w/ (1) 2 qt. Bin	8-3/4" (223 mm) W x 21-5/8" (550 mm) D x 25-1/2" (648 mm) H	FHB12	Maple	$794.99
448KB-BCSC-11C	Base Organizer w/ (3) 1.25 qt. & (1) 2 qt. Bins	11-3/4" (299 mm) W x 21-5/8" (550 mm) D x 25-1/2" (648 mm) H	FHB15	Maple	$957.99
Frameless Base Cabinet Pullout w/ Knife Block and Utensil Bins w/ BLUM Soft-Close					
448KB-BCSC-6C	Base Organizer w/ (1) 1.25 qt. Bin	7-1/8" (182 mm) W x 21-5/8" (550 mm) D x 25-1/2" (648 mm) H	FLFHB9	Maple	$717.99
448KB-BCSC-9C	Base Organizer w/ (1) 2 qt. Bin	10-1/8" (258 mm) W x 21-5/8" (550 mm) D x 25-1/2" (648 mm) H	FLFHB12	Maple	$826.99
Base Cabinet Pullout w/ (3) Utensil Bins and BLUM Soft-Close					
448UT-BCSC-5C	Base Organizer w/ (3) 1.25 qt Bins	6" (153 mm) W x 21-5/8" (550 mm) D x 25-1/2" (648 mm) H	FHB9	Maple	$496.99
448UT-BCSC-8C	Base Organizer w/ (3) 2 qt. Bins	8-3/4" (223 mm) W x 21-5/8" (550 mm) D x 25-1/2" (648 mm) H	FHB12	Maple	$594.99
448UT-BCSC-11C	Base Organizer w/ (6) 1.25 qt Bins	11-3/4" (298 mm) W x 21-5/8" (549 mm) D x 25-1/2 - 29-1/2" (648 - 749 mm) H	FHB15	Maple	$733.99
Frameless Base Cabinet Pullout w/ (3) Utensil Bins and BLUM Soft-Close					
448UT-BCSC-6C	Base Organizer w/ (3) 1.25 qt Bins	7-1/8" (181 mm) W x 21-21/32" (550 mm) D x 25-1/2" (648 mm) H	FLFHB9	Maple	$559.99
448UT-BCSC-9C	Base Organizer w/ (3) 2 qt Bins	10-1/8" (258 mm) W x 21-21/32" (550 mm) D x 25-1/2" (648 mm) H	FLFHB12	Maple	$643.99
Base Cabinet Pullout w/ OXO® Containers and BLUM Soft-Close					
448OXO-BCSC-8C	Base Organizer	8-3/4" (223 mm) W x 21-5/8" (550 mm) D x 25-19/32" (650 mm) H	FHB12	Maple	$977.99
Paper Towel Holder Base Cabinet Pullout w/ BLUM Soft-Close					
448PTH-BCSC-6C	Paper Towel Pullout	6-7/8" (175 mm) W x 21-23/32" (552 mm) D x 26-29/32 - 30-7/8" (684 - 785 mm) H	FHB9 FLFHB12	Maple	$459.99
448PTH-BCSC-8C	Paper Towel Pullout	8-3/4" (223 mm) W x 21-23/32" (552 mm) D x 26-29/32 - 30-7/8" (684 - 785 mm) H	FHB12	Maple	$530.99

Base Cabinet Pullout Tray Divider/Foil Wrap Holder

447 Series



447-BCSC-9C

- Designed for 9" and 12" base cabinets
- Natural maple construction with a semi-gloss finish
- Full-extension, undermount slides w/ BLUM soft-close
- Patented mounting straps (US Patent No. 9,756,941)
- Removable center T-Bar divider for taller items
- Patented door-mount brackets provide 5" of adjustability and include micro-trim adjuster (US Patent No. 8,388,076)
- TSCA Title VI compliant



Included T-Bars allow you to customize your storage needs



447-BCSC-5C
Base Cabinet Pullout
(5" unit shown)



Adjustable threaded rub bushings included for custom applications



Plastic rub bushings included for 1-1/2" and 1-3/4" face frame applications

Minimum Cabinet Opening

PRODUCT #	MCO FF	MCO FL
447-BCSC-5C	5-1/2" (140 mm)	6" (152 mm)
447-BCSC-8C	8-1/2" (216 mm)	9" (229 mm)
447-BCSC-6C	7-1/2" (191 mm)	7-1/2" (191 mm)
447-BCSC-9C	10-1/2" (267 mm)	10-1/2" (267 mm)

Base Cabinet Pullout Tray Divider/Foil Wrap Holder w/ BLUM Soft-Close

PRODUCT	DESCRIPTION	DIMS	CAB	FINISH	SLP
447-BCSC-5C	Base Cabinet Pullout	5-15/16" (151 mm) W x 21-21/32" (551 mm) D x 19-1/2" (496 mm) H	B9	Maple	$450.99
447-BCSC-8C	Base Cabinet Pullout	8-23/32" (222 mm) W x 21-21/32" (551 mm) D x 19-1/2" (496 mm) H	B12	Maple	$501.99
Frameless Base Cabinet Pullout Tray Divider/Foil Wrap Holder w/ BLUM Soft-Close					
447-BCSC-6C	Base Cabinet Pullout	7-1/8" (181 mm) W x 21-21/32" (551 mm) D x 19-1/2" (496 mm) H	FLB9	Maple	$467.99
447-BCSC-9C	Base Cabinet Pullout	10-1/8" (258 mm) W x 21-21/32" (551 mm) D x 19-1/2" (496 mm) H	FLB12	Maple	$546.99

449 Series

Side and Bottom Mount Base Pullout



449KB-BCSC-8C

blum

- Designed for 9″ and 12″ full height base cabinets
  - Face frame fit 1-3/4″, 1-1/2″ and 1-5/8″
  - Frameless fit 3/4″ and 5/8″
- Natural maple construction with a semi-gloss finish with chrome accents
- (2) adjustable shelves for base organizer
- Utensil organizer features (3) 1.25 qt. removable stainless steel bins and (1) adjustable shelf
- Full-extension, undermount slides w/ BLUM MOVENTO soft-close
- Face frame version features patented foldable slide set for easy installation
- Mounts to cabinet door, floor and side
- Patented foldable slide set for easy installation for 449, 449UT and 449KB 5C and 8C units (US Patent No. 10,799,020)
- Patented door-mount brackets provide 5″ of adjustability and include micro-trim adjuster (US Patent No. 8,388,076)
- TSCA Title VI compliant

Scan for video



Frameless slide location



Face frame slide location



Adjustable "L" bracket for side mount



Spacer allows for multiple face frame sizes

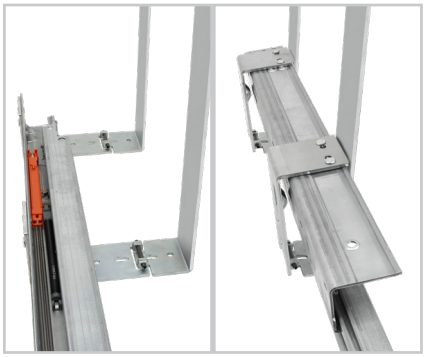

Patented face frame foldable slide set for easy installation *(US Patent No. 10,799,020)*



449KB-BCSC-8C
Side and Bottom Mount
Knife Block Base Pullout
(8" version shown)



449-BCSC-5C
Side and Bottom Mount
Base Pullout
(5" version shown)



449-BCSC-7C
Frameless Side and Bottom Mount
Base Pullout
(7" version shown)



449-BCSC-8C
Side and Bottom Mount
Base Pullout
(8" version shown)



449UT-BCSC-7C
Frameless Side and Bottom Mount
Utensil Base Pullout
(7" version shown)

Side and Bottom Mount Base Pullout w/ BLUM Soft-Close

PRODUCT	DESCRIPTION	DIMS	MCO	CAB	FINISH	SLP
449-BCSC-5C	Base Organizer	6-1/4" (159 mm) W x 21-3/4" (553 mm) D x 25-19/32" (650 mm) H	5-1/2" (140 mm)	FHB9	Maple	$521.99
449-BCSC-8C	Base Organizer	9-1/4" (235 mm) W x 21-3/4" (553 mm) D x 25-19/32" (650 mm) H	8-1/2" (216 mm)	FHB12	Maple	$581.99
Frameless Side and Bottom Mount Base Pullout w/ BLUM Soft-Close						
449-BCSC-7C	Base Organizer	7-1/2" (191 mm) W x 21-3/4" (553 mm) D x 25-1/4" (642 mm) H	7-1/2" (191 mm)	FLFHB9	Maple	$522.99
449-BCSC-10C	Base Organizer	10-1/2" (267 mm) W x 21-3/4" (553 mm) D x 25-1/4" (642 mm) H	10-1/2" (267 mm)	FLFHB12	Maple	$578.99
Side and Bottom Mount Utensil Base Pullout w/ BLUM Soft-Close						
449UT-BCSC-5C	Utensil Organizer	6-1/4" (159 mm) W x 21-3/4" (553 mm) D x 25-19/32" (650 mm) H	5-1/2" (140 mm)	FHB9	Maple	$559.99
449UT-BCSC-8C	Utensil Organizer	9-1/4" (235 mm) W x 21-3/4" (553 mm) D x 25-19/32" (650 mm) H	8-1/2" (216 mm)	FHB12	Maple	$676.99
Frameless Side and Bottom Mount Utensil Base Pullout w/ BLUM Soft-Close						
449UT-BCSC-7C	Utensil Organizer	7-1/2" (191 mm) W x 21-3/4" (553 mm) D x 25-1/4" (642 mm) H	7-1/2" (191 mm)	FLFHB9	Maple	$556.99
449UT-BCSC-10C	Utensil Organizer	10-1/2" (267 mm) W x 21-3/4" (553 mm) D x 25-1/4" (642 mm) H	10-1/2" (267 mm)	FLFHB12	Maple	$646.99
Side and Bottom Mount Knife Block Base Pullout w/ BLUM Soft-Close						
449KB-BCSC-8C	Base Organizer w/ (1) Bin	9-9/32" (236 mm) W x 21-3/4" (553 mm) D x 25-19/32" (650 mm) H	8-1/2" (216 mm)	FHB12	Maple	$766.99

5322 Series

Contemporary Base Cabinet Pullouts



All Units:

- Solid bottom shelves with chrome-plated round wire, gray or natural maple or orion gray flat wire with textured linen finish
- Full-extension, undermount slides w/ BLUM soft-close
- Patented door-mount brackets (US Patent No. 8,047,621)
- TSCA Title VI compliant

5322-BCSC

- Designed for 9", 12" and 15" face frame base cabinets and 9" and 12" frameless base cabinets
- 5322-BCSC-5 mounts to the cabinet side wall
- 5322-BCSC-8 and 11 mounts to cabinet floor

5322KB

- Designed for 9" frameless cabinets and 12" and 15" frameless and face frame base cabinets
- (1) 2 qt. or (2) 2 qt. and (2) 1.25 qt. removable stainless-steel bins
- Knife block features Flex Rod Technology that adjusts to hold knives securely

5322UT

- Designed for 12" base cabinets
- (3) 2 qt. or (3) 1.25 qt. removable stainless-steel bins

Designed in cooperation with SIGE

Scan for video

Minimum Cabinet Opening

5322KB-BCSC-6-FOG

PRODUCT #	MCO FF	MCO FL
5322-BCSC-6-**	7" (178 mm)	7-1/2" (191 mm)
5322-BCSC-9-**	10" (254 mm)	10-1/2" (268 mm)
5322-BCSC-6-FOG	7" (178 mm)	7-1/2" (191 mm)
5322-BCSC-9-FOG	10" (254 mm)	10-1/2" (268 mm)
5322-BCSC-5-**	6" (152 mm)	6" (152 mm)
5322-BCSC-8-**	8-1/2" (216 mm)	9" (229 mm)
5322-BCSC-11-**	11-1/2" (292 mm)	12" (305 mm)
5322KB-BCSC-6-**	7" (178 mm)	7-1/2" (191 mm)
5322KB-BCSC-9-**	10" (254 mm)	10-1/2" (267 mm)
5322KB-BCSC-6-FOG	7" (178 mm)	7-1/2" (191 mm)
5322KB-BCSC-8-**	8-1/2" (216 mm)	9" (229 mm)
5322KB-BCSC-11-**	11-1/2" (292 mm)	12" (305 mm)
5322UT-BCSC-6-**	7" (178 mm)	7-1/2" (191 mm)
5322UT-BCSC-6-FOG	7" (178 mm)	7-1/2" (191 mm)
5322UT-BCSC-8-**	8-1/2" (216 mm)	9" (229 mm)





Solid bottom shelves in maple or gray with chrome accents, or orion gray with flat wire



5322-BCSC-5-MP
Face Frame
Contemporary Base Cabinet Pullout
(5" Maple version shown, side mount only)

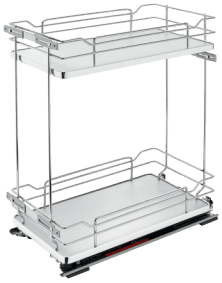

5322-BCSC-11-GR
Contemporary Base Cabinet Pullout w/ Soft-Close
(11" Gray version shown)

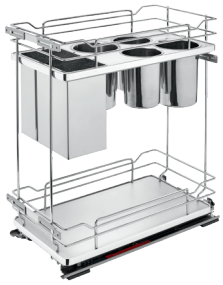

5322KB-BCSC-11-GR
Contemporary Base Cabinet Pullout w/ Knife Block and Utensil Bins
(11" Gray version shown)



5322UT-BCSC-6-FOG
Contemporary Base Cabinet Pullout w/ Utensil Bins
(6" Orion Gray version shown)

Frameless Contemporary Base Cabinet Pullout w/ BLUM Soft-Close

PRODUCT	DESCRIPTION	DIMS	CAB	FINISH	SLP
5322-BCSC-6-GR	Base Organizer	7-1/4" (185 mm) W x 21-11/16" (551 mm) D x 24-1/4" (616 mm) H	FLFHB9	Gray	$540.99
5322-BCSC-6-MP	Base Organizer	7-1/4" (185 mm) W x 21-11/16" (551 mm) D x 24-1/4" (616 mm) H	FLFHB9	Maple	$540.99
5322-BCSC-9-GR	Base Organizer	10-1/4" (261 mm) W x 21-11/16" (551 mm) D x 24-1/4" (616 mm) H	FLFHB12	Gray	$556.99
5322-BCSC-9-MP	Base Organizer	10-1/4" (261 mm) W x 21-11/16" (551 mm) D x 24-1/4" (616 mm) H	FLFHB12	Maple	$563.99
5322-BCSC-6-FOG	Base Organizer	7-1/4" (185 mm) W x 21-11/16" (551 mm) D x 24-1/4" (616 mm) H	FLFHB9	Orion Gray	$570.99
5322-BCSC-9-FOG	Base Organizer	10-1/4" (261 mm) W x 21-11/16" (551 mm) D x 24-1/4" (616 mm) H	FLFHB12	Orion Gray	$601.99
Face Frame Contemporary Base Cabinet Pullout w/ BLUM Soft-Close					
5322-BCSC-5-GR	Base Organizer	6" (153 mm) W x 22-1/4" (566 mm) D x 24-1/2" (623 mm) H	FFFHB9	Gray	$495.99
5322-BCSC-5-MP	Base Organizer	6" (153 mm) W x 22-1/4" (566 mm) D x 24-1/2" (623 mm) H	FFFHB9	Maple	$495.99
5322-BCSC-8-GR	Base Organizer	8-3/4" (223 mm) W x 21-11/16" (551 mm) D x 24-1/4" (616 mm) H	FFFHB12	Gray	$596.99
5322-BCSC-8-MP	Base Organizer	8-3/4" (223 mm) W x 21-11/16" (551 mm) D x 24-1/4" (616 mm) H	FFFHB12	Maple	$601.99
5322-BCSC-11-GR	Base Organizer	11-3/4" (299 mm) W x 21-11/16" (551 mm) D x 24-1/4" (616 mm) H	FFFHB15	Gray	$623.99
5322-BCSC-11-MP	Base Organizer	11-3/4" (299 mm) W x 21-11/16" (551 mm) D x 24-1/4" (616 mm) H	FFFHB15	Maple	$623.99
Frameless Contemporary Knife Block Base Cabinet Pullout w/ BLUM Soft-Close					
5322KB-BCSC- 6-GR	Base Organizer w/ (1) Bin	7-1/4" (185 mm) W x 21-11/16" (551 mm) D x 24-1/4" (616 mm) H	FLFHB9	Gray	$960.99
5322KB-BCSC-6-MP	Base Organizer w/ (1) Bin	7-1/4" (185 mm) W x 21-11/16" (551 mm) D x 24-1/4" (616 mm) H	FLFHB9	Maple	$960.99
5322KB-BCSC-9-GR	Base Organizer w/ (1) Bin	10-1/4" (261 mm) W x 21-11/16" (551 mm) D x 24-1/4" (616 mm) H	FLFHB12	Gray	$1021.99
5322KB-BCSC-9-MP	Base Organizer w/ (1) Bin	10-1/4" (261 mm) W x 21-11/16" (551 mm) D x 24-1/4" (616 mm) H	FLFHB12	Maple	$1021.99
5322KB-BCSC-6-FOG	Base Organizer w/ (1) Bin	7-1/4" (185 mm) W x 21-11/16" (551 mm) D x 24-1/4" (616 mm) H	FLFHB9	Orion Gray	$991.99
Face Frame Contemporary Knife Block Base Cabinet Pullout w/ BLUM Soft-Close					
5322KB-BCSC-8-GR	Base Organizer w/ (1) Bin	8-3/4" (223 mm) W x 21-11/16" (551 mm) D x 24-1/4" (616 mm) H	FFFHB12	Gray	$915.99
5322KB-BCSC-8-MP	Base Organizer w/ (1) Bin	8-3/4" (223 mm) W x 21-11/16" (551 mm) D x 24-1/4" (616 mm) H	FFFHB12	Maple	$915.99
5322KB-BCSC-11-GR	Base Organizer w/ (4) Bins	11-3/4" (299 mm) W x 21-11/16" (551 mm) D x 24-1/4" (616 mm) H	FFFHB15	Gray	$991.99
5322KB-BCSC-11-MP	Base Organizer w/ (4) Bins	11-3/4" (299 mm) W x 21-11/16" (551 mm) D x 24-1/4" (616 mm) H	FFFHB15	Maple	$991.99
Frameless Contemporary Base Cabinet Pullout w/ (3) Utensil Bins and BLUM Soft-Close					
5322UT-BCSC-6-GR	Base Organizer	7-1/4" (185 mm) W x 21-11/16" (551 mm) D x 24-1/4" (616 mm) H	FLFHB9	Gray	$663.99
5322UT-BCSC-6-MP	Base Organizer	7-1/4" (185 mm) W x 21-11/16" (551 mm) D x 24-1/4" (616 mm) H	FLFHB9	Maple	$663.99
5322UT-BCSC-6-FOG	Base Organizer	7-1/4" (185 mm) W x 21-11/16" (551 mm) D x 24-1/4" (616 mm) H	FLFHB9	Orion Gray	$685.99
Face Frame Contemporary Base Cabinet Pullout w/ (3) Utensil Bins and BLUM Soft-Close					
5322UT-BCSC-8-GR	Base Organizer	8-3/4" (223 mm) W x 21-11/16" (551 mm) D x 24-1/4" (616 mm) H	FFFHB12	Gray	$696.99
5322UT-BCSC-8-MP	Base Organizer	8-3/4" (223 mm) W x 21-11/16" (551 mm) D x 24-1/4" (616 mm) H	FFFHB12	Maple	$696.99

5730 Series

Premier Pullout Shelf



5730-21CR

- Designed for 15″, 18″, 24″ and 36″ base cabinets
- Chrome-plated round wire
- Full-extension, undermount slides w/ soft-close
- Adjustable mounting brackets
- Door-mount brackets included

Minimum Cabinet Opening

PRODUCT #	MCO FF	MCO FL
5730-12CR	11-1/2″ (292 mm)	11-1/2″ (292 mm)
5730-15CR	14-1/2″ (368 mm)	14-1/2″ (368 mm)
5730-21CR	20-1/2″ (521 mm)	20-1/2″ (521 mm)
5730-33CR	32-1/2″ (826 mm)	32-1/2″ (826 mm)

MOUNTING BRACKET OPTIONS

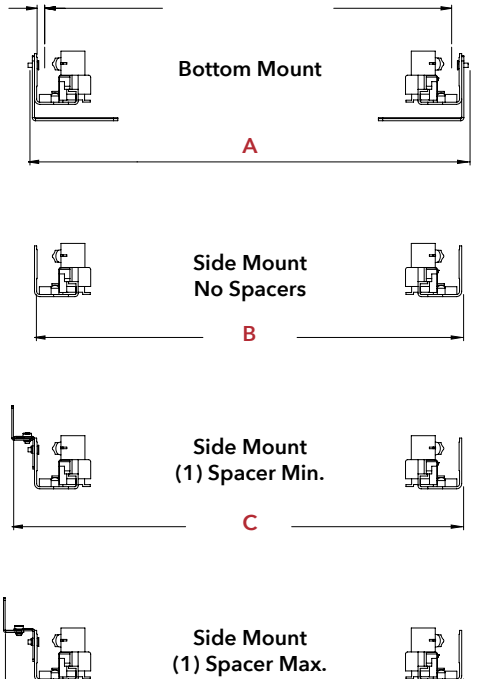



Create a customized space for pots, pans and lids with the Drop-In Cookware Organizer, compatible with 21" and 33" pullout shelves

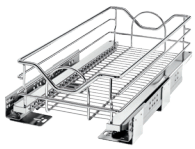

5730-12CR
Pullout Wire Shelf
(12" version shown)



5730-15CR
Pullout Wire Shelf
(15" version shown)

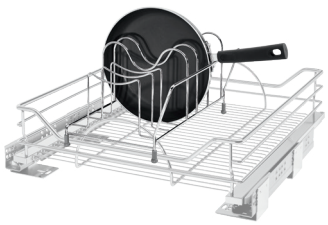

5730-21CR
Pullout Wire Shelf
(21" version shown)

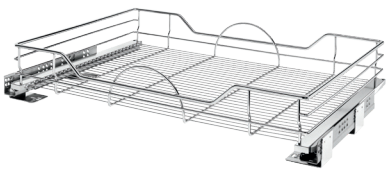

5730-33CR
Pullout Wire Shelf
(33" version shown)

PART	A	B	C	D	E	F
5730-12CR	11-15/16" (303 mm)	11-1/2" (292 mm)	12-5/16" (313 mm)	12-11/16" (322 mm)	13-1/8" (333 mm)	13-7/8" (352 mm)
5730-15CR	14-15/16" (379 mm)	14-1/2" (368 mm)	15-5/16" (389 mm)	15-11/16" (399 mm)	16-1/8" (410 mm)	16-7/8" (429 mm)
5730-21CR	20-15/16" (532 mm)	20-1/2" (521 mm)	21-5/16" (541 mm)	21-11/16" (551 mm)	22-1/8" (562 mm)	22-7/8" (581 mm)
5730-33CR	32-15/16" (837 mm)	32-1/2" (826 mm)	33-5/16" (846 mm)	33-11/16" (856 mm)	34-1/8" (867 mm)	34-7/8" (886 mm)

Pullout Wire Shelf w/ Soft-Close slides

PRODUCT	DESCRIPTION	DIMS	CAB	FINISH	SLP
5730-12CR	Pullout Wire Shelf	11-1/2 (293 mm) W x 21-3/4" (553 mm) D x 5-5/16 - 5-19/32" (135 - 143 mm) H	B15	Chrome	$298.99
5730-15CR	Pullout Wire Shelf	14-1/2(369 mm) W x 21-3/4" (553 mm) D x 5-5/16 - 5-19/32" (135 - 143 mm) H	B18	Chrome	$316.99
5730-21CR	Pullout Wire Shelf	20-1/2 - 22-11/16" (521 - 577 mm) W x 21-3/4" (553 mm) D x 5-5/16 - 5-19/32" (135 - 143 mm) H	B24	Chrome	$346.99
5730-33CR	Pullout Wire Shelf	32-1/2 - 34-23/32" (826 - 882 mm) W x 21-3/4" (553 mm) D x 5-5/16 - 5-19/32" (135 - 143 mm) H	B36	Chrome	$359.99
Accessories					
5789CR	Drop-In Cookware Organizer	14-1/16" (358 mm) W x 9-1/2" (242 mm) D x 7-11/16" (196 mm) H		Chrome	$46.99

5330 Series

Solid Bottom Pullout Shelf



5330-33BCSC-MP

- Designed for 15", 18", 24" and 36" base cabinets
- Solid bottom shelves with chrome-plated wire, gray or natural maple, or orion gray flat wire with satin solid bottom
- Full-extension, undermount slides w/ BLUM soft-close
- Side and bottom mounting brackets
- Door-mounting brackets included
- TSCA Title VI compliant

Designed in cooperation with SIGE

Scan for video

Minimum Cabinet Opening

PRODUCT #	MCO FF	MCO FL
5330-12BCSC-**	11-1/2" (292 mm)	11-1/2" (292 mm)
5330-15BCSC-**	14-1/2" (368 mm)	14-1/2" (368 mm)
5330-21BCSC-**	20-1/2" (521 mm)	20-1/2" (521 mm)
5330-33BCSC-**	32-1/2" (826 mm)	32-1/2" (826 mm)
5330-33BCSCFL-FOG	32-1/2" (826 mm)	32-1/2" (826 mm)

MOUNTING BRACKET OPTIONS

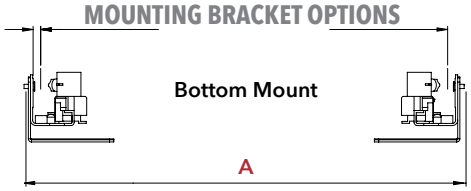



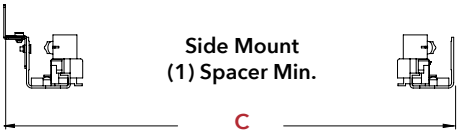

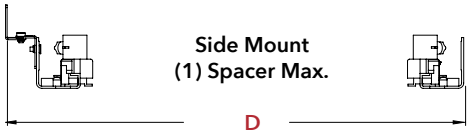

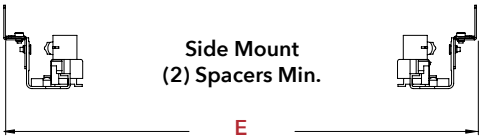

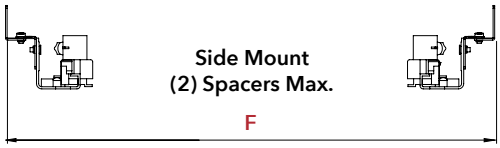





Solid bottom shelves in maple or gray, with chrome accents or orion gray with flat wire





5330-12BCSC-GR
Solid Bottom Shelf
(12" Gray version shown)



5330-15BCSC-MP
Solid Bottom Shelf
(15" Gray version shown)



5330-21BCSC-MP
Solid Bottom Shelf
(21" Maple version shown)



5330-33BCSCFL-FOG
Solid Bottom Shelf
(33" Orion Gray version shown)

PART	A	B	C	D	E	F
5330-12BCSC-**	12-1/8" (308 mm)	11-11/16" (300 mm)	12-1/2" (318 mm)	12-7/8" (327 mm)	13-5/16" (338 mm)	14-1/16" (357 mm)
5330-15BCSC-**	15-1/8" (384 mm)	14-11/16" (373 mm)	15-1/2" (394 mm)	15-7/8" (403 mm)	16-5/16" (414 mm)	17-1/16" (433 mm)
5330-21BCSC-**	21-1/8" (537 mm)	20-11/16" (526 mm)	21-1/2" (546 mm)	21-7/8" (556 mm)	22-5/16" (567 mm)	23-1/16" (586 mm)
5330-33BCSC-**	33-1/8" (841 mm)	32-11/16" (830 mm)	33-1/2" (851 mm)	33-7/8" (860 mm)	34-5/16" (872 mm)	35-1/16" (891 mm)
5330-33BCSCFL-FOG	33-1/8" (841 mm)	32-11/16" (830 mm)	33-1/2" (851 mm)	33-7/8" (860 mm)	34-5/16" (872 mm)	35-1/16" (891 mm)

NOTE: ** Insert "MP" for Maple Shelf or "GR" for Gray Shelf

Face Frame Solid Bottom Pullout Shelf w/ BLUM Soft-Close

PRODUCT	DESCRIPTION	DIMS	MCO	CAB	FINISH	SLP
5330-12BCSC-**	Solid Bottom Shelf	11-11/16" (297 mm) W x 21-17/32" (547 mm) D x 5-1/16" (129 mm) H	11-11/16" (300 mm)	FFB15	Chrome	$495.99
5330-15BCSC-**	Solid Bottom Shelf	14-11/16" (373 mm) W x 21-17/32" (547 mm) D x 5-1/16" (129 mm) H	14-11/16" (373 mm)	FFB18	Chrome	$518.99
5330-21BCSC-**	Solid Bottom Shelf	20-11/16" (526 mm) W x 21-17/32" (547 mm) D x 5-1/16" (129 mm) H	20-11/16" (526 mm)	FFB24	Chrome	$540.99
5330-33BCSC-**	Solid Bottom Shelf	32-11/16" (831 mm) W x 21-17/32" (547 mm) D x 5-1/16" (129 mm) H	32-11/16" (830 mm)	FFB36	Chrome	$586.99
Frameless Solid Bottom Pullout Shelf w/ BLUM Soft-Close						
5330-33BCSCFL-FOG	Solid Bottom Shelf	32-11/16" (831 mm) W x 21-17/32" (547 mm) D x 5-1/16" (129 mm) H	32-1/2" (826 mm) - FF 32-11/16" (830 mm) - FL	FLB36	Orion Gray	$617.99

ML Series

Heavy-Duty Mixer Lift



ML-WNHDSCOG-18FL

Soft Close

RAS-ML Series

- Fits most cabinet sizes
- Works with your custom shelf
- Mounts to cabinet side (face frame cabinets require spacers to flush sides to opening)
- Adjustable spring tension
- Available with built-in shock dampeners
- Holds appliances up to 60 lbs.

ML Series

- Silver lift:
  - Designed for 18" full height, face frame base cabinets
  - 1-3/8" thick maple shelf
- Orion gray lift:
  - Designed for 18" full height, frameless base cabinets
  - 1-3/8" thick walnut shelf
- Mounts to cabinet side
- Adjustable spring tension
- Built-in shock dampeners
- Holds appliances up to 60 lbs.
- TSCA Title VI compliant

NOTE: Mixer lift will not operate properly in a drawer/door application

Scan for video

rev-a-shelf.com | 800-626-1126 | info@rev-a-shelf.com

REV-A-SHELF

RECOMMENDED SPRING POSITION FOR VARYING MIXER WEIGHT

0–20 lb. = 1

20–30 lb. = 2

30–60 lb. = 3



RAS-ML-HDSCOG
Soft-Close Mixer Lift
(Orion Gray finish shown)



Soft-close piston



Great for a variety of small appliances

SOFT-CLOSE MIXER LIFT KITS W/ SHELF INCLUDED



ML-MPHDSCCR-18
Soft-Close Mixer Lift Kit
(Maple/Metallic Silver finish shown)



ML-WNHDSCOG-18FL
Soft-Close Mixer Lift Kit
(Walnut/Orion Gray finish shown)

Shelf Dimensions
Maple (face frame): 11-3/4" (298 mm) W x 20" (508 mm) D x 1-3/8" (35 mm) H
Walnut (frameless): 13-1/4" (336 mm) W x 20" (508 mm) D x 1-3/8" (35 mm) H
Note: *Shelves are only sold in kits with the mixer lift.*

MIXER CLEARING DIMENSIONS

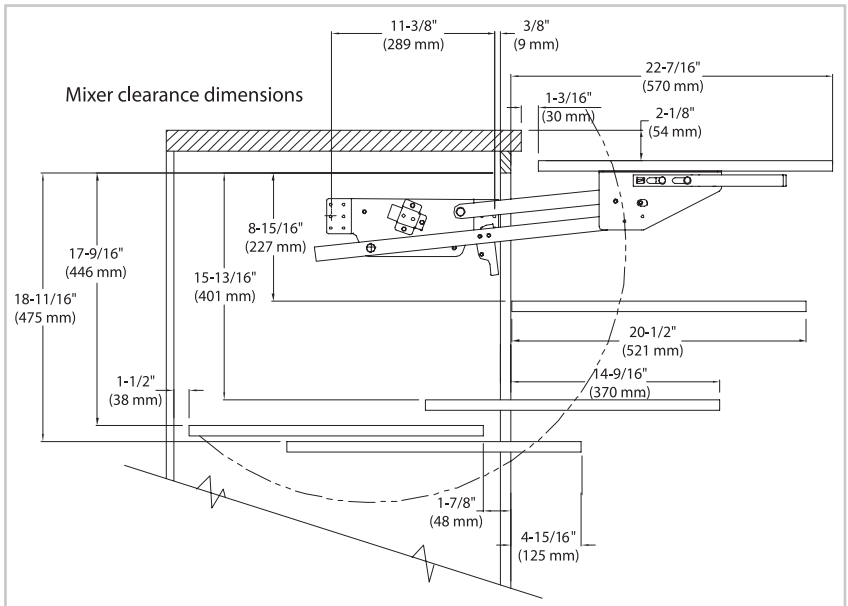

NOTE: To determine shelf size, measure the distance between mounting plates when installed minus 1-1/4" (32 mm). Recommended length of shelf is 20" (508 mm). Mounting plates are 1" (25 mm) wide. Mixer lift will not operate properly in a drawer/door application.

Heavy-Duty Mixer Lift Kit w/ Soft-Close

PRODUCT	DESCRIPTION	DIMS	MCO	CAB	FINISH	SLP
ML-MPHDSCCR-18	Mixer Lift Kit	See Illustration	15" (381 mm)	FFFHB18	Metallic Silver/Maple	$583.99
ML-WNHDSCOG-18FL	Mixer Lift Kit	See Illustration	16-1/2" (419 mm)	FLFHB18	Orion Gray	$791.99
Heavy-Duty Mixer Lift w/ Soft-Close - Arms Only						
RAS-ML-HDSCOG	Mixer Lift	See Illustration			Orion Gray	$406.99
RAS-ML-HDSC	Mixer Lift	See Illustration			Metallic Silver	$409.99



Innovation through *Organization*™







TALL/PANTRY SOLUTIONS

EVERYTHING WITHIN REACH

Organizing your pantry is easier than ever with our innovative line of accessories. Whether you prefer the beautiful look of wood, the luxurious style of chrome or the more practical polymer, you are sure to find the perfect answer to your walk-in or in-cabinet pantry needs. Designed to increase functionality and enhance the look and performance of your kitchen, our ground-breaking accessories provide easy access and organization for everyday items.

PROP 65 WARNING FOR CALIFORNIA RESIDENTS

WARNING: These products can expose you to chemicals such as formaldehyde, lead or styrene, which are known to the State of California to cause cancer and birth defects or other reproductive harm. For more information go to www.P65Warnings.ca.gov

REV-A-SHELF®

4PIL Series

Wood Pilaster System



4PILU-58-238-20

NEW!

blum

- Available in (3) upright heights:
  - 49-5/16″
  - 54-13/32″
  - 57-5/16″

  (3) rail widths:
  - 7/8″
  - 1-1/8″
  - 2-3/8″
- Slide bracket adds 1/4″ width to each side (1/2″ overall)
- All uprights can be trimmed to a minimum width of 7/8″
- Drawer boxes are easy to adjust with no tools required
- No visible system holes
- Slide brackets install easily with (4) screws per drawer box
- Drawer boxes included with Pilaster System Kits only
- Kits can be stacked for tall pantry application
- TSCA Title VI compliant



Wooden template for easy installation



Slide brackets install easily with (4) screws per drawer box







Brackets rest on hidden dowels allowing for effortless adjustment while maintaining stability (Adds 1/4″ width per side)

NOTE: See page 154 to see the Pilaster System in a base application.

REV-A-SHELF



Ball-Bearing Slide Brackets
now available!



4PIL27-24SC-3
Pilaster System Kit
((2) Standard, (1) Tall shown)



4PILU-58-238--20
Pilaster Kit (Upright Only)

Pilaster System Kits w/ BLUM Soft-Close - Slides, Uprights and Drawers

PRODUCT	DESCRIPTION	DIMS	CAB	FINISH	SLP
4PIL20-18SC-2	(1) Standard, (1) Tall w/ Dividers	16-1/2" (420 mm) W x 21-17/32" (548 mm) D x 19-5/8 - 21-9/32" (499 - 541 mm) H	B18	Maple	$562.99
4PIL20-24SC-2	(1) Standard, (1) Tall w/ Dividers	22-1/2" (572 mm) W x 21-17/32" (548 mm) D x 19-5/8 - 21-9/32" (499 - 541 mm) H	B24	Maple	$598.99
4PIL27-18SC-3	(2) Standard, (1) Tall w/ Dividers	16-1/2" (420 mm) W x 21-17/32" (548 mm) D x 27-3/16 - 28-13/16" (691 - 732 mm) H	FHB18	Maple	$672.99
4PIL27-24SC-3	(2) Standard, (1) Tall w/ Dividers	22-1/2" (572 mm) W x 21-17/32" (548 mm) D x 27-3/16 - 28-27/32" (691 - 733 mm) H	FHB24	Maple	$735.99

Pilaster Kits - Uprights, Slide Brackets & Wood Pilaster Template Only - Single Pack

PRODUCT	DESCRIPTION	DIMS	FINISH	SLP
4PIL-54-088-1	Pilaster Upright Kit	7/8" (23 mm) W x 3/4" (20 mm) D x 54-13/32" (1382 mm) H	Maple	$213.99
4PIL-54-113-1	Pilaster Upright Kit	1-1/8" (29 mm) W x 3/4" (20 mm) D x 54-13/32" (1382 mm) H	Maple	$245.99
4PIL-54-238-1	Pilaster Upright Kit	2-3/8" (61 mm) W x 3/4" (20 mm) D x 54-13/32" (1382 mm) H	Maple	$314.99

Uprights, Slide Brackets & (1) Pilaster Template Only - Bulk Pack

4PIL-54-088-10	(10) Pilaster Upright Kits	Maple	$202.99 ea.
4PIL-54-113-10	(10) Pilaster Upright Kits	Maple	$236.99 ea.
4PIL-54-238-10	(10) Pilaster Upright Kits	Maple	$302.99 ea.

Pilaster Template

4PIL-T-1	Pilaster Installation Template	Maple	$24.99

Uprights Only - Bulk Pack

4PILU-43-088-20	(20) Individual Uprights	7/8" (23 mm) W x 3/4" (20 mm) D x 42-5/16" (1078 mm) H	Maple	$36.99 ea.
4PILU-43-113-20	(20) Individual Uprights	1-1/8" (29 mm) W x 3/4" (20 mm) D x 42-5/16" (1078 mm) H	Maple	$39.99 ea.
4PILU-43-238-20	(20) Individual Uprights	2-3/8" (61 mm) W x 3/4" (20 mm) D x 42-5/16" (1078 mm) H	Maple	$57.99 ea.
4PILU-50-088-20	(20) Individual Uprights	7/8" (23 mm) W x 3/4" (20 mm) D x 49-5/16" (1267 mm) H	Maple	$40.99 ea.
4PILU-50-113-20	(20) Individual Uprights	1-1/8" (29 mm) W x 3/4" (20 mm) D x 49-5/16" (1267 mm) H	Maple	$43.99 ea.
4PILU-50-238-20	(20) Individual Uprights	2-3/8" (61 mm) W x 3/4" (20 mm) D x 49-5/16" (1267 mm) H	Maple	$64.99 ea.
4PILU-58-088-20	(20) Individual Uprights	7/8" (23 mm) W x 3/4" (20 mm) D x 57-5/16" (1459 mm) H	Maple	$44.99 ea.
4PILU-58-113-20	(20) Individual Uprights	1-1/8" (29 mm) W x 3/4" (20 mm) D x 57-5/16" (1459 mm) H	Maple	$48.99 ea.
4PILU-58-238-20	(20) Individual Uprights	2-3/8" (61 mm) W x 3/4" (20 mm) D x 57-5/16" (1459 mm) H	Maple	$71.99 ea.

Ball-Bearing Slide Bracket

4PIL-HDW-L-200	Pilaster Left Bracket	3/4" (20 mm) W x 19/32" (15 mm) D x 1-15/16" (50 mm) H	$1.99 ea.
4PIL-HDW-R-200	Pilaster Right Bracket	3/4" (20 mm) W x 19/32" (15 mm) D x 1-15/16" (50 mm) H	$1.99 ea.

Undermount Slide Brackets

4PIL-HDW-1	Pilaster Upright Hardware Kit for Slide Attach (1 set of 4 brackets)	Silver	$12.99
4PIL-HDW-10	Pilaster Upright Hardware Kit for Slide Attach (10 sets of 4 brackets)	Silver	$11.99 ea.
4PIL-HDW-160	Pilaster upright hardware kit for slide attach (160 sets of 4 brackets)	Silver	$7.99 ea.

Drawer Box w/ BLUM Soft-Close

4WDB4-PIL-18SC-1	(1) Standard Drawer	13-11/32" (339 mm) W x 21" (534 mm) D x 4" (102 mm) H (drawers only)	B18	Maple	$211.99
4WDB7-PIL-18SC-1	(1) Tall Drawer w/ Dividers	13-11/32" (339 mm) W x 21" (534 mm) D x 7" (178 mm) H (drawers only)	B18	Maple	$272.99
4WDB4-PIL-24SC-1	(1) Standard Drawer for 24"	19-11/32" (492 mm) W x 21" (534 mm) D x 4" (102 mm) H (drawers only)	B24	Maple	$232.99
4WDB7-PIL-24SC-1	(1) Tall Drawer w/ Dividers	19-11/32" (492 mm) W x 21" (534 mm) D x 7" (178 mm) H (drawers only)	B24	Maple	$322.99

448-TPF Series

Wood Pantry Pullout



448-TP43-11-1

Soft Close

- Designed for tall cabinet applications
- Available in (3) heights 43″, 51″ and 58″ and (4) widths 5″, 8″, 11″ and 14″
- Natural maple construction with a semi-gloss finish
- Shipped ready to assemble
- Fulterer EZ-close slide features 265 lb. recommended use with pantry
- Patented door-mount brackets with 5″ of adjustability and a micro-trim adjuster (US Patent No. 8,388,076)
- Rub bushings included for 1-1/2″, 1-5/8″, 1-3/4″ face frames
- TSCA Title VI compliant



Top glide for increased stability



Heavy-duty bottom slide



For inset applications or for those who prefer to keep their cabinets flawless, we recommend our IDRB bushing. The discreet design prevents side-to-side movement and fits behind the frame, eliminating the need for surface drilling giving you a seamless look and unparalleled stability.



448-TPF43-5-1
Pullout Pantry
(5" version shown)



448-TPF51-8-1
Pullout Pantry
(8" version shown)



448-TPF58-11-1
Pullout Pantry
(11" version shown)



448-TPF58-14-1
Pullout Pantry
(14" version shown)

5" Wood Pantry Pullout w/ Fulterer Soft-Close						
PRODUCT	DESCRIPTION	DIMS	MCO	CAB	FINISH	SLP
448-TPF43-5-1	Wood Pantry Pullout	5" (127 mm) W x 22-1/2" (572 mm) D x 43-21/32 - 52-21/32" (1109 - 1338 mm) H	5-1/2" (140 mm)	T9	Maple	$1018.99
448-TPF51-5-1	Wood Pantry Pullout	5" (127 mm) W x 22-1/2" (572 mm) D x 51-21/32 - 60-21/32" (1312 - 1541 mm) H	5-1/2" (140 mm)	T9	Maple	$1052.99
448-TPF58-5-1	Wood Pantry Pullout	5" (127 mm) W x 22-1/2" (572 mm) D x 58-21/32 - 67-21/32" (1490 - 1719 mm) H	5-1/2" (140 mm)	T9	Maple	$1100.99
8" Wood Pantry Pullout w/ Fulterer Soft-Close						
448-TPF43-8-1	Wood Pantry Pullout	8" (204 mm) W x 22-1/2" (572 mm) D x 43-21/32 - 52-21/32" (1109 - 1338 mm) H	8-1/2" (216 mm)	T12	Maple	$1054.99
448-TPF51-8-1	Wood Pantry Pullout	8" (204 mm) W x 22-1/2" (572 mm) D x 51-21/32 - 60-21/32" (1312 - 1541 mm) H	8-1/2" (216 mm)	T12	Maple	$1089.99
448-TPF58-8-1	Wood Pantry Pullout	8" (204 mm) W x 22-1/2" (572 mm) D x 58-21/32 - 67-21/32" (1490 - 1719 mm) H	8-1/2" (216 mm)	T12	Maple	$1189.99
11" Wood Pantry Pullout w/ Fulterer Soft-Close						
448-TPF43-11-1	Wood Pantry Pullout	11" (280 mm) W x 22-1/2" (572 mm) D x 43-21/32 - 52-21/32" (1109 - 1338 mm) H	11-1/2" (292 mm)	T15	Maple	$1152.99
448-TPF51-11-1	Wood Pantry Pullout	11" (280 mm) W x 22-1/2" (572 mm) D x 51-21/32 - 60-21/32" (1312 - 1541 mm) H	11-1/2" (292 mm)	T15	Maple	$1248.99
448-TPF58-11-1	Wood Pantry Pullout	11" (280 mm) W x 22-1/2" (572 mm) D x 58-21/32 - 67-21/32" (1490 - 1719 mm) H	11-1/2" (292 mm)	T15	Maple	$1282.99
14" Wood Pantry Pullout w/ Fulterer Soft-Close						
448-TPF43-14-1	Wood Pantry Pullout	14" (356 mm) W x 22-1/2" (572 mm) D x 43-21/32 - 52-21/32" (1109 - 1338 mm) H	14-1/2" (368 mm)	T18	Maple	$1248.99
448-TPF51-14-1	Wood Pantry Pullout	14" (356 mm) W x 22-1/2" (572 mm) D x 51-21/32 - 60-21/32" (1312 - 1541 mm) H	14-1/2" (368 mm)	T18	Maple	$1352.99
448-TPF58-14-1	Wood Pantry Pullout	14" (356 mm) W x 22-1/2" (572 mm) D x 58-21/32 - 67-21/32" (1490 - 1719 mm) H	14-1/2" (368 mm)	T18	Maple	$1427.99
Accessories						
IDRB-1	Adjustable Rub Bushing for Inset Application				Metal	$14.99

432 Series

Wood Tall Filler Pullout



- Available for 6" applications in 39" and 45" heights
- Use alone or in conjunction with others to reach 84", 90" or 96" heights
- Adjustable shelves:
  - (5) for the 39" model
  - (6) for the 45" model
- Natural maple construction with a semi-gloss finish
- Full-extension, ball-bearing slides
- Features three-slide design that provides the most stable function on the market
- TSCA Title VI compliant



432-TF39-6C
Wood Tall Filler Pullout
(39" version shown)



432-TF45-6C
Wood Tall Filler Pullout
(45" version shown)

432-TF45-6C



Included mending plates securely fastens both frames together

Wood Tall Filler Pullout

PRODUCT	DESCRIPTION	DIMS	FINISH	SLP
432-TF39-6C	39" Tall Filler Organizer	6" (153 mm) W x 23" (585 mm) D x 38-1/2" (978 mm) H	Maple	$518.99
432-TF45-6C	45" Tall Filler Organizer	6" (153 mm) W x 23" (585 mm) D x 44-1/2" (1131 mm) H	Maple	$551.99

Wood Swing Out Pantry

4W Series



- Designed for 36" pantry cabinets
- Natural maple construction with a semi-gloss finish
- Removable chrome accents
- Swings out on an industrial piano hinge
- Adjustable interior door and pantry shelves
- Adjustable mounting brackets with 5" of adjustability (US Patent No: 7,204,569)
- Complete kit: (2) swing out units and (2) door storage units
- Center divider not included
- TSCA Title VI compliant



4WP18-45-KIT
Wood Swing Out Pantry
(45" version shown)



4WP18-51-KIT
Wood Swing Out Pantry
(51" version shown)



4WP18-57-KIT
Wood Swing Out Pantry
(57" version shown)
Top rails not included

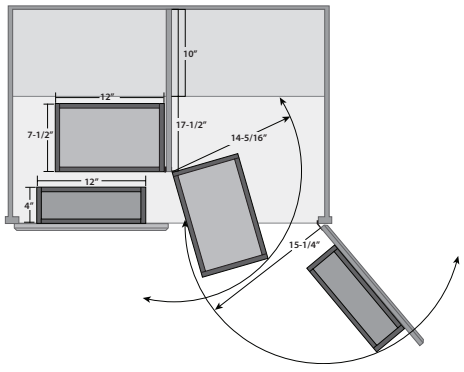

Wood Swing Out Pantry

PRODUCT	DESCRIPTION	DIMS	MCO	CAB	FINISH	SLP
4WP18-45-KIT	45" Swing Out Pantry Kit - Includes (2) 4WDP18-45 and (2) 4WSP18-45		33" (838 mm)	T36	Maple	$1271.99
4WP18-51-KIT	51" Swing Out Pantry Kit - Includes (2) 4WSP18-51 and (2) 4WDP18-51		33" (838 mm)	T36	Maple	$1334.99
4WP18-57-KIT	57" Swing Out Pantry Kit - Includes (2) 4WDP18-57 and (2) 4WSP18-57		33" (838 mm)	T36	Maple	$1369.99
Components						
4WSP18-45	45" Swing Out Pantry (w/Hardware)	12" (305 mm) W x 7-1/2" (191 mm) D x 45" (1143 mm) H	33" (838 mm)	T36	Maple	$380.99
4WDP18-45	45" Pantry Door Unit (w/Hardware)	12" (305 mm) W x 4" (102 mm) D x 45" (1143 mm) H	15-1/4" (387 mm)	T36	Maple	$272.99
4WSP18-51	51" Swing Out Pantry (w/Hardware)	12" (305 mm) W x 7-1/2" (191 mm) D x 51-1/4" (1302 mm) H	33" (838 mm)	T36	Maple	$399.99
4WDP18-51	51" Pantry Door Unit (w/Hardware)	12" (305 mm) W x 4" (102 mm) D x 51-1/4" (1302 mm) H	15-1/4" (387 mm)	T36	Maple	$285.99
4WSP18-57*	57" Swing Out Pantry (w/Hardware)	12" (305 mm) W x 7-1/2" (191 mm) D x 57" (1448 mm) H	33" (838 mm)	T36	Maple	$409.99
4WDP18-57*	57" Pantry Door Unit (w/Hardware)	12" (305 mm) W x 4" (102 mm) D x 57" (1448 mm) H	15-1/4" (387 mm)	T36	Maple	$298.99

5374 Series

Flat Wire Swing Out Pantry

- Designed for frameless 18″ and 24″ width pantry cabinets
- Overall height 74″
- Orion gray finish and flat wire construction
- Solid bottom shelves with textured linen finish
- Swing out hardware allows complete access to pantry
- (2) door mounting brackets
- (5) easy-to-adjust shelves
- TSCA Title VI compliant



5374-24FL-FOG

Scan for video

Designed in cooperation with EIGE



5374-18FL-FOG
Swing Out Pantry
(18″ version shown)

PRODUCT #	MCO FF	MCO FL
5374-18FL-FOG	14-1/4″ (362 mm)	16-1/2″ (419 mm)
5374-24FL-FOG	22-1/4″ (565 mm)	22-1/2″ (572 mm)

Frameless Flat Wire Swing Out Pantry

PRODUCT	DESCRIPTION	DIMS	MCO	CAB	FINISH	SLP
5374-18FL-FOG	Pantry for 18″	14-3/16″ (361 mm) W x 18-1/2″ (470 mm) D x 74-1/16″ (1882 mm) H	16-1/2″ (419 mm)	FLT18	Orion Gray	$1493.99
5374-24FL-FOG	Pantry for 24″	22-1/16″ (561 mm) W x 18-1/2″ (470 mm) D x 74-1/16″ (1882 mm) H	22-1/2″ (571 mm)	FLT24	Orion Gray	$1536.99

Glideware™ Pullout

GLD Series



GLD-W22-BC-7

- Designed for 14" to 22" cabinet depths
- Solid wood construction, natural maple or gray
- Mounts to cabinet top and rear
- (2) slide configurations:
  - Full-extension, ball-bearing slides
  - Full-extension, undermount slides with BLUM soft-close
- Up to (7) nickel chrome hooks
- US Patent No. 9,433,283 and 9,022,237
- TSCA Title VI compliant

Scan for video

NOTE: Dimensions are without the optional rear mounting bracket. Rear mounting bracket is 6-1/4" (159 mm) wide and adds 3/4" (19 mm) to the depth, and 13/16" (20 mm) to the height. MCO dimensions and CAB recommendations are dependent on what accessories you intend on hanging on the product.

PRODUCT	DESCRIPTION	DIMS	CAB	FINISH	SLP
Glideware™ Pullout w/ (5 or 7) Short Hooks					
GLD-W22-SC-7	22" Glideware™	4" (102 mm) W x 22" (559 mm) D x 4-1/8" (105 mm) H	T18	Maple	$180.99
Glideware™ Pullout w/ BLUM Soft-Close and (5 or 7) Long Hooks					
GLD-W22-BC-7	22" Glideware™	6" (153 mm) W x 22" (559 mm) D x 5-1/16" (129 mm) H	T18	Maple	$367.99

5300 Series

Solid Bottom Pantry Pullout



5373-13-MP

- Available in (5) widths and (4) height ranges for frameless 24" deep cabinetry
- Natural maple or gray solid bottom shelves
- Full-extension slides with soft-close
- Micro-adjustment door-mounting brackets
- Kit packaged with frame, baskets, adjustable shelf extender bracket and hardware
- TSCA Title VI compliant

BASKET WIDTH
8" (203 mm)
10" (254 mm)
13" (330 mm)
16" (406 mm)
19" (482 mm)



Adjustable door-mount bracket



Solid bottom shelves available in maple or gray

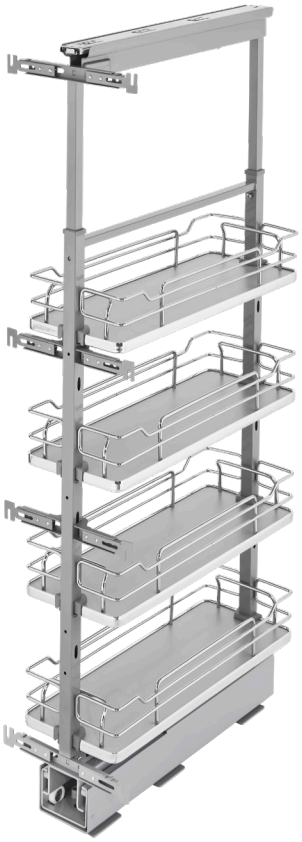

5343-08-GR
Pullout Pantry
(8" Gray version shown)

Comes with the adjustable shelf extender bracket, so you can move the top shelf on our 5300 Series pantries with ease. The slide-on design installs effortlessly when affixing to the fully-extended frame, letting you rearrange your shelves and maximize your storage space.





NOTE: ** Insert "MP" for Maple Shelf or "GR" for Gray Shelf

Solid Bottom Pantry Pullout w/ Soft-Close — (4) Shelves/ (2) Door-Mount Brackets

PRODUCT	DESCRIPTION	DIMS	MCO	CAB	SLP
5343-08-**	Pantry Pullout	8-1/4" (210 mm) W x 21-11/16" (550 mm) D x 43-13/32" – 50-3/4" (1102 mm - 1289 mm) H	8-1/2" (216 mm)	T12	$1388.99
5343-10-**	Pantry Pullout	10-1/4" (260 mm) W x 21-11/16" (550 mm) D x 43-13/32" – 50-3/4" (1102 mm - 1289 mm) H	10-1/2" (267 mm)	FLT12	$1456.99
5343-13-**	Pantry Pullout	13-1/4" (337 mm) W x 21-11/16" (550 mm) D x 43-13/32" – 50-3/4" (1102 mm - 1289 mm) H	13-1/2" (343 mm)	FLT15	$1465.99
5343-16-**	Pantry Pullout	16-1/4" (413 mm) W x 21-11/16" (550 mm) D x 43-13/32" – 50-3/4" (1102 mm - 1289 mm) H	16-1/2" (419 mm)	FLT18	$1580.99
5343-19-**	Pantry Pullout	19-1/4" (489 mm) W x 21-11/16" (550 mm) D x 43-13/32" – 50-3/4" (1102 mm - 1289 mm) H	19-1/2" (495 mm)	FLT21	$1593.99
5350-08-**	Pantry Pullout	8-1/4" (210 mm) W x 21-11/16" (550 mm) D x 50-3/4" – 58-9/32" (1289 mm - 1480 mm) H	8-1/2" (216 mm)	T12	$1416.99
5350-10-**	Pantry Pullout	10-1/4" (260 mm) W x 21-11/16" (550 mm) D x 50-3/4" – 58-9/32" (1289 mm - 1480 mm) H	10-1/2" (267 mm)	FLT12	$1446.99
5350-13-**	Pantry Pullout	13-1/4" (337 mm) W x 21-11/16" (550 mm) D x 50-3/4" – 58-9/32" (1289 mm - 1480 mm) H	13-1/2" (343 mm)	FLT15	$1461.99
5350-16-**	Pantry Pullout	16-1/4" (413 mm) W x 21-11/16" (550 mm) D x 50-3/4" – 58-9/32" (1289 mm - 1480 mm) H	16-1/2" (419 mm)	FLT18	$1569.99
5350-19-**	Pantry Pullout	19-1/4" (489 mm) W x 21-11/16" (550 mm) D x 50-3/4" – 58-9/32" (1289 mm - 1480 mm) H	19-1/2" (495 mm)	FLT21	$1584.99
Solid Bottom Pantry Pullout w/ Soft-Close — (5) Shelves/ (3) Door-Mount Brackets					
5358-08-**	Pantry Pullout	8-1/4" (210 mm) W x 21-11/16" (550 mm) D x 58-1/4" – 65-3/4" (1479 mm - 1670 mm) H	8-1/2" (216 mm)	T12	$1569.99
5358-10-**	Pantry Pullout	10-1/4" (260 mm) W x 21-11/16" (550 mm) D x 58-1/4" – 65-3/4" (1479 mm - 1670 mm) H	10-1/2" (267 mm)	FLT12	$1614.99
5358-13-**	Pantry Pullout	13-1/4" (337 mm) W x 21-11/16" (550 mm) D x 58-1/4" – 65-3/4" (1479 mm - 1670 mm) H	13-1/2" (343 mm)	FLT15	$1630.99
5358-16-**	Pantry Pullout	16-1/4" (413 mm) W x 21-11/16" (550 mm) D x 58-1/4" – 65-3/4" (1479 mm - 1670 mm) H	16-1/2" (419 mm)	FLT18	$1784.99
5358-19-**	Pantry Pullout	19-1/4" (489 mm) W x 21-11/16" (550 mm) D x 58-1/4" – 65-3/4" (1479 mm - 1670 mm) H	19-1/2" (495 mm)	FLT21	$1800.99
Solid Bottom Pantry Pullout w/ Soft-Close — (6) Shelves/ (4) Door-Mount Brackets					
5373-08-**	Pantry Pullout	8-1/4" (210 mm) W x 21-11/16" (550 mm) D x 73-5/8" – 80-3/4" (1870 mm - 2051 mm) H	8-1/2" (216 mm)	T12	$1754.99
5373-10-**	Pantry Pullout	10-1/4" (260 mm) W x 21-11/16" (550 mm) D x 73-5/8" – 80-3/4" (1870 mm - 2051 mm) H	10-1/2" (267 mm)	FLT12	$1738.99
5373-13-**	Pantry Pullout	13-1/4" (337 mm) W x 21-11/16" (550 mm) D x 73-5/8" – 80-3/4" (1870 mm - 2051 mm) H	13-1/2" (343 mm)	FLT15	$1800.99
5373-16-**	Pantry Pullout	16-1/4" (413 mm) W x 21-11/16" (550 mm) D x 73-5/8" – 80-3/4" (1870 mm - 2051 mm) H	16-1/2" (419 mm)	FLT18	$1968.99
5373-19-**	Pantry Pullout	19-1/4" (489 mm) W x 21-11/16" (550 mm) D x 73-5/8" – 80-3/4" (1870 mm - 2051 mm) H	19-1/2" (495 mm)	FLT21	$2015.99

5700 Series

Wire Pantry Pullout



5743-20-CR-1

- Available in (6) widths and (4) height ranges for 24" deep cabinetry
- Full-extension slides with soft-close
- Adjustable door-mount brackets
- Kit packaged with frame, baskets, adjustable shelf extender bracket and hardware

BASKET WIDTH
4-1/8" (105 mm)
8" (203 mm)
10" (254 mm)
14" (356 mm)
16" (406 mm)
19" (482 mm)



Adjustable door-mount bracket



Frame height adjustment



5773-10-CR-1
Pullout Pantry
(10" version shown)

Comes with the adjustable shelf extender bracket, so you can move the top shelf on our 5300 Series pantries with ease. The slide-on design installs effortlessly when affixing to the fully-extended frame, letting you rearrange your shelves and maximize your storage space.





Wire Pantry Pullout w/ Soft-Close — (4) Shelves/ (3) Door-Mount Brackets

PRODUCT	DESCRIPTION	DIMS	MCO	CAB	SLP
5743-04-CR-1	Pantry Pullout	4-13/32" (113 mm) W x 21-23/32" (552 mm) D x 43-13/32 - 50-3/4" (1103 - 1290 mm) H	4-1/2" (114 mm)	T9	$1133.99
5743-08-CR-1	Pantry Pullout	8" (204 mm) W x 21-23/32" (552 mm) D x 43-13/32 - 50-3/4" (1103 - 1290 mm) H	8-1/2" (216 mm)	T12	$1194.99
5743-10-CR-1	Pantry Pullout	10" (254 mm) W x 21-23/32" (552 mm) D x 43-13/32 - 50-3/4" (1103 - 1290 mm) H	10-1/2" (268 mm)	T15	$1285.99
5743-14-CR-1	Pantry Pullout	14" (356 mm) W x 21-23/32" (552 mm) D x 43-13/32 - 50-3/4" (1103 - 1290 mm) H	14-1/2" (368 mm)	T18	$1348.99
5743-16-CR-1	Pantry Pullout	16" (407 mm) W x 21-23/32" (552 mm) D x 43-13/32 - 50-3/4" (1103 - 1290 mm) H	16-1/2" (419 mm)	T21	$1394.99
5743-20-CR-1	Pantry Pullout	20" (508 mm) W x 21-23/32" (552 mm) D x 43-13/32 - 50-3/4" (1103 - 1290 mm) H	20-1/2" (521 mm)	T24	$1440.99
5750-04-CR-1	Pantry Pullout	4-13/32" (113 mm) W x 21-23/32" (552 mm) D x 50-3/4 - 58-9/32" (1290 - 1481 mm) H	4-1/2" (114 mm)	T9	$1087.99
5750-08-CR-1	Pantry Pullout	8" (204 mm) W x 21-23/32" (552 mm) D x 50-3/4 - 58-9/32" (1290 - 1481 mm) H	8-1/2" (216 mm)	T12	$1208.99
5750-10-CR-1	Pantry Pullout	10 " (254 mm) W x 21-23/32" (552 mm) D x 50-3/4 - 58-9/32" (1290 - 1481 mm) H	10-1/2" (268 mm)	T15	$1271.99
5750-14-CR-1	Pantry Pullout	14" (356 mm) W x 21-23/32" (552 mm) D x 50-3/4 - 58-9/32" (1290 - 1481 mm) H	14-1/2" (368 mm)	T18	$1348.99
5750-16-CR-1	Pantry Pullout	16-1/4" (413 mm) W x 21-11/16" (550 mm) D x 50-3/4" – 58-9/32" (1290 mm - 1481 mm) H	16-1/2" (419 mm)	T21	$1392.99
5750-20-CR-1	Pantry Pullout	20" (508 mm) W x 21-23/32" (552 mm) D x 50-3/4 - 58-9/32" (1290 - 1481 mm) H	20-1/2" (521 mm)	T24	$1424.99
Wire Pantry Pullout w/ Soft-Close — (5) Shelves/ (4) Door-Mount Brackets					
5758-04-CR-1	Pantry Pullout	4-13/32" (113 mm) W x 21-23/32" (552 mm) D x 58-1/4 - 65-3/4" (1480 - 1671 mm) H	4-1/2" (114 mm)	T9	$1255.99
5758-08-CR-1	Pantry Pullout	8" (204 mm) W x 21-23/32" (552 mm) D x 58-1/4 - 65-3/4" (1480 - 1671 mm) H	8-1/2" (216 mm)	T12	$1424.99
5758-10-CR-1	Pantry Pullout	10" (254 mm) W x 21-23/32" (552 mm) D x 58-1/4 - 65-3/4" (1480 - 1671 mm) H	10-1/2" (268 mm)	T15	$1410.99
5758-14-CR-1	Pantry Pullout	14" (356 mm) W x 21-23/32" (552 mm) D x 58-1/4 - 65-3/4" (1480 - 1671 mm) H	14-1/2" (368 mm)	T18	$1532.99
5758-16-CR-1	Pantry Pullout	16" (407 mm) W x 21-23/32" (552 mm) D x 58-1/4 - 65-3/4" (1480 - 1671 mm) H	16-1/2" (419 mm)	T21	$1546.99
5758-20-CR-1	Pantry Pullout	20" (508 mm) W x 21-23/32" (552 mm) D x 58-1/4 - 65-3/4" (1480 - 1671 mm) H	20-1/2" (521 mm)	T24	$1622.99
Wire Pantry Pullout w/ Soft-Close — (6) Shelves/ (4) Door-Mount Brackets					
5773-04-CR-1	Pantry Pullout	4-13/32" (113 mm) W x 21-23/32" (552 mm) D x 73-5/8 - 80-3/4" (1871 - 2052 mm) H	4-1/2" (114 mm)	T9	$1255.99
5773-08-CR-1	Pantry Pullout	8" (204 mm) W x 21-23/32" (552 mm) D x 73-5/8 - 80-3/4" (1871 - 2052 mm) H	8-1/2" (216 mm)	T12	$1469.99
5773-10-CR-1	Pantry Pullout	10" (254 mm) W x 21-23/32" (552 mm) D x 73-5/8 - 80-3/4" (1871 - 2052 mm) H	10-1/2" (268 mm)	T15	$1516.99
5773-14-CR-1	Pantry Pullout	14" (356 mm) W x 21-23/32" (552 mm) D x 73-5/8 - 80-3/4" (1871 - 2052 mm) H	14-1/2" (368 mm)	T18	$1638.99
5773-16-CR-1	Pantry Pullout	16" (407 mm) W x 21-23/32" (552 mm) D x 73-5/8 - 80-3/4" (1871 - 2052 mm) H	16-1/2" (419 mm)	T21	$1682.99
5773-20-CR-1	Pantry Pullout	20" (508 mm) W x 21-23/32" (552 mm) D x 73-5/8 - 80-3/4" (1871 - 2052 mm) H	20-1/2" (521 mm)	T24	$1743.99



Innovation through *Organization*™







DRAWER SOLUTIONS

ORDER INSIDE **DRAWERS**

Create a clutter-free home with the inventive selection of drawer accessories from Rev-A-Shelf®. Organizing is simple with great products like our cutlery trays, utensil trays and universal spice inserts. We've even found a way to expand the space in your drawer with our unique two-tier system for cookware, cutlery and cosmetics. From the kitchen, bathroom or to the laundry room, Rev-A-Shelf® drawer accessories furnish unlimited storage solutions for every room in your home.

PROP 65 WARNING FOR CALIFORNIA RESIDENTS

WARNING: These products can expose you to chemicals such as formaldehyde, lead or styrene, which are known to the State of California to cause cancer and birth defects or other reproductive harm. For more information go to www.P65Warnings.ca.gov

REV-A-SHELF®

4PTD Series

Paper Towel Drawer

NEW!

blum

- Designed for 18" full-height base cabinets or custom door/drawer applications with a 15" wide x 7-1/2" (7-5/8" for inset) high drawer opening
- Natural maple dovetail construction with a semi-gloss finish or walnut with a satin finish
- Holds (1) standard paper towel roll (6" diameter) with room in the back for additional rolls
- Removable dowel for easy refills
- Includes a maple or walnut inset beauty ring for use as a template or drawer front with a 3/32" gap
- Glides on BLUM TANDEM full-extension concealed soft-close slides, 100 lb. static load rating
- TSCA Title VI compliant



4PTD-18HSC-1



4PTD-WN18HSC-1
Paper Towel Drawer System w/ BLUM Soft-Close Slides
(Walnut version shown)



Maple or walnut inset beauty ring included

Paper Towel Drawer System w/ BLUM Soft-Close Slides

PRODUCT	DESCRIPTION	DIMS	CAB	FINISH	SLP
4PTD-18HSC-1	Paper Towel Drawer	15" (381 mm) W x 21-3/4 - 23-3/4" (553 - 604 mm) D x 6-11/16" (170 mm) H	FHB18	Maple	$354.99
4PTD-WN18HSC-1	Paper Towel Drawer	15" (381 mm) W x 21-3/4 - 23-3/4" (553 - 604 mm) D x 6-11/16" (170 mm) H	FHB18	Walnut	$449.99

Paper Towel & Foil Wrap Tiered Drawer

4PTTD Series

NEW!

blum



- Designed for use in 18" full-height base cabinets or door/drawer applications with a 15" wide by 7-1/2" (7-5/8" for inset) high drawer opening
- Natural maple dovetail construction with a semi-gloss finish or walnut with a satin finish
- Holds (1) standard paper towel roll (6" diameter) and features a tiered design with (3) included holders and cutting blades for aluminum foil, plastic wrap and parchment paper, as well as storage space in the back and underneath
- Removable dowel for easy refills and smooth operation
- Includes a maple or walnut inset beauty ring for use as a template or drawer front with a 3/32" gap
- Glides on BLUM TANDEM full-extension concealed soft-close slides, 100 lb. static load rating
- TSCA Title VI compliant

4PTTD-18HSC-1





4PTTD-WN18HSC-1
Paper Towel Tiered Drawer w/ BLUM Soft-Close Slides
(Walnut version shown)



Maple or walnut inset beauty ring included

Scan for video

Paper Towel Tiered Drawer System w/ Foil Cutters and BLUM Soft-Close Slides

PRODUCT	DESCRIPTION	DIMS	CAB	FINISH	SLP
4PTTD-18HSC-1	Paper Towel Tiered Drawer	15" (381 mm) W x 21-3/4" (553 mm) D x 6-7/8" (176 mm) H	FHB18	Maple	$447.99
4PTTD-WN18HSC-1	Paper Towel Tiered Drawer	15" (381 mm) W x 21-3/4" (553 mm) D x 6-7/8" (176 mm) H	FHB18	Walnut	$551.99

4FWI Series

Foil Wrap Insert

NEW!

- Natural maple and steel construction, black or gray
- Sliding cutting blade allows for a smooth cut every time
- Removable dowel for easy refills
- Low-profile lid with a serrated edge
- Accommodates 12″ grocery store rolls up to 2″ in diameter
- Drop-in installation
- Compatible with the 4WUT/4WUTCC Utensil Tray Inserts from Rev-A-Shelf®
- Each Foil Wrap Insert is sold individually
- TSCA Title VI compliant



4FWI-16-14-1



Black finish shown

Foil Wrap Insert w/ Sliding Cutting Blade for 4WUT Organizers

PRODUCT	DESCRIPTION	DIMS	FINISH	SLP
4FWI-16-14-1	Foil Wrap Insert	3-3/8″ (87 mm) W x 15-31/32″ (406 mm) D x 2-19/32″ (67 mm) H	Metallic Silver	$73.99
4FWI-16-18-1	Foil Wrap Insert	3-3/8″ (87 mm) W x 15-31/32″ (406 mm) D x 2-19/32″ (67 mm) H	Black	$73.99

Adjustable Deep Drawer Divider Insert

4ADI Series



- Designed for 24" base face frame cabinet drawers
- Complete drawer system, just add your drawer front
- Easy installation
- Natural maple construction with a semi-gloss finish
- Full-extension, undermount w/ BLUM soft-close slides
- 5/8" drawer side walls
- (5) drawer compartments
- Comes with (8) short dividers, (5) long dividers and (26) clips
- Mounts to cabinet drawer front, rear and sidewalls
- Figure 8 door-mount brackets
- Drawer front not included
- TSCA Title VI compliant



Adjustable dividers for easy customization

Adjustable Deep Drawer Divider System

PRODUCT	DESCRIPTION	DIMS	CAB	FINISH	SLP
4ADI-36-1	Deep Drawer System	31-7/32" (793 mm) W x 19-1/2" (496 mm) D x 5-31/32" (152 mm) H	B36	Maple	$246.99

4OXO Series

Deep Drawer Organizer Insert w/ OXO® Containers

- Designed for 18″ and 24″ base cabinet deep drawers
- Easy drop-in installation
- Natural maple construction with a semi-gloss finish
- (1) rear compartment and up to (2) tiers
- Overall height with containers is 7-7/8″
- Trim-to-fit existing drawers
- 18″ comes with (6) OXO 1.7 qt. containers
- 24″ comes with (8) OXO 1.7 qt. containers
- TSCA Title VI compliant



4OXO-24-1

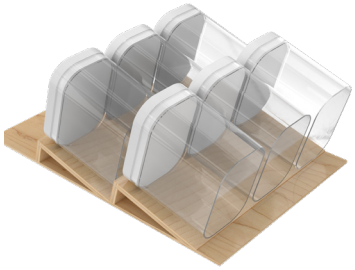

4OXO-18-1
Deep Drawer Organizer
w/ OXO® Containers

Deep Drawer Organizer w/ OXO® Containers

PRODUCT	DESCRIPTION	DIMS	CAB	FINISH	SLP
4OXO-18-1	Deep Drawer Organizer w/ (6) OXO® Containers	13-7/32″ (337 mm) W x 19-1/2″ (496 mm) D x 7-7/8″ (200 mm) H	B18	Maple	$380.99
4OXO-24-1	Deep Drawer Organizer w/ (8) OXO® Containers	19-1/4″ (489 mm) W x 19-1/2″ (496 mm) D x 7-7/8″ (200 mm) H	B24	Maple	$469.99

Tiered Maxx Drawer

4WTMD Series



blum

- Designed for 24" base face frame cabinet drawers
- Complete drawer system, just add your drawer front
- Easy installation
- Natural maple construction with a semi-gloss finish
- Full-extension, undermount w/ BLUM soft-close slides
- 5/8" drawer side walls
- (5) drawer compartments
- Comes with (8) short dividers, (5) long dividers and (26) clips
- Mounts to cabinet drawer front, rear and sidewalls
- Figure 8 door-mount brackets
- Drawer front not included
- TSCA Title VI compliant



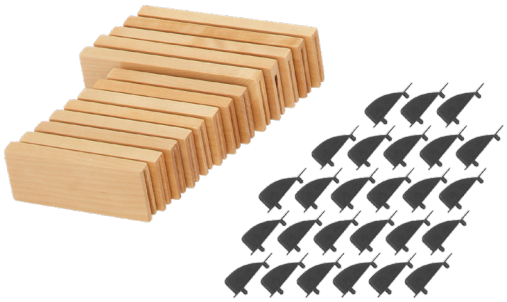

Comes with (8) short dividers, (5) long dividers and (26) clips

Scan for video

JUST ADD YOUR OWN DRAWER FRONT!

NOTE: Requires 30" of clearance when opened

Tiered Maxx Drawer w/ BLUM Soft-Close

PRODUCT	DESCRIPTION	DIMS	MCO	CAB	FINISH	SLP
4WTMD-24HSC-1	Tiered Maxx Drawer	21" (534 mm) W x 21-17/32" (548 mm) D x 4-3/8" (111 mm) H	21" (533 mm)	B24	Maple	$438.99

4WDIV Series

Adjustable Deep Drawer Divider Insert



- Designed for 36″ or smaller base cabinet deep drawers
- Trim-to-fit existing drawer
- Installs w/ (4) screws
- Maple construction with a semi-gloss finish
- Each 4WDIV comes with (2) notched dividers and (3) cross dividers
- Insert kits include:
  24″ - (2) standard dividers
  30″ - (3) standard dividers
  36″ - (4) standard dividers
- TSCA Title VI compliant



4WDIV-24-1
Deep Drawer Divider
(24″ version shown)



4WDIV-30-1
Deep Drawer Divider
(30″ version shown)

4WDIV-36-1



Customization for endless uses

Adjustable Deep Drawer Divider Insert

PRODUCT	DESCRIPTION	DIMS	CAB	FINISH	SLP
4WDIV-24-1	24″ Deep Drawer Divider	18-3/4″ (477 mm) W x 19-13/16″ (504 mm) D x 6″ (153 mm) H	B24	Maple	$182.99
4WDIV-30-1	30″ Deep Drawer Divider	24-3/4″ (629 mm) W x 19-13/16″ (504 mm) D x 6″ (153 mm) H	B30	Maple	$217.99
4WDIV-36-1	36″ Deep Drawer Divider	30-3/4″ (782 mm) W x 19-13/16″ (504 mm) D x 6″ (153 mm) H	B36	Maple	$253.99
Shallow Adjustable Drawer Divider Insert					
4WDIV-24SH-1	18″ Shallow Drawer Divider	19-1/4″ (489 mm) W x 19-13/16″ (503 mm) D x 2-3/8″ (60 mm) H	B18	Maple	$144.99
4WDIV-30SH-1	24″ Shallow Drawer Divider	25-1/4″ (642 mm) W x 19-13/16″ (503 mm) D x 2-3/8″ (60 mm) H	B24	Maple	$152.99
4WDIV-36SH-1	36″ Shallow Drawer Divider	31-7/32″ (793 mm) W x 19-13/16″ (503 mm) D x 2-3/8″ (60 mm) H	B36	Maple	$198.99

Drying Rack Drawer

4WDR Series



4WDR-24HSC-1

- Designed for 24" and 30" face frame base cabinet drawer openings
- Natural maple construction with a semi-gloss finish
- Rust-resistant stainless-steel rods
- 24" has (13) rods and 30" has (15) rods
- Patent-pending rack with (2) positions of placement
- Requires 42" and 48" of clearance when opened
- Folds away when not in use
- 4WDR-24HSC-1 and 4WDR-30HSC-1 include BLUM soft-close slides
- 4WDR-24H-1 and 4WDR-30H-1 sold without slides
- Figure 8 door-mount brackets
- Drawer front not included
- TSCA Title VI compliant



Patent-pending rack with
(2) positions of placement



4WDR-30HSC-1
Wood Drying Rack Pullout
w/ BLUM Soft-Close

JUST ADD YOUR OWN DRAWER FRONT!

Wood Drying Rack w/ BLUM Soft-Close

PRODUCT	DESCRIPTION	DIMS	MCO	CAB	FINISH	SLP
4WDR-24HSC-1	Wood Drying Rack	21" (534 mm) W x 21-3/4" (553 mm) D x 4-13/32" (113 mm) H	21" (533 mm)	B24	Maple	$389.99
4WDR-30HSC-1	Wood Drying Rack	27" (686 mm) W x 21-3/4" (553 mm) D x 4-13/32" (113 mm) H	27" (686 mm)	B30	Maple	$558.99

4WTCDD Series

Tiered Deep Drawer

blum

- Designed for 30" and 36" base cabinet deep drawers
- Complete drawer system, just add your drawer front
- Easy installation
- Natural maple construction with a semi-gloss finish
- Full-extension, undermount w/ BLUM soft-close slides
- (3) drawer compartments
- Sliding top tray is designed for use with 4WCT, 4WUT and 4WKB inserts (sold separately)
- Mounts to cabinet drawer front, rear and sidewalls
- Figure 8 door-mount brackets
- US Patent No. D843,791
- TSCA Title VI compliant



4WTCDD-36HSC-1

Scan for video



4WTCDD-30HSC-1 & 4WTCDD-724HFLSC-1
Tiered Deep Drawers
(30" version shown)



Top tier compatible with our trimmable inserts

Frameless Tiered Deep Drawer w/ BLUM Soft-Close

PRODUCT	DESCRIPTION	DIMS	MCO	CAB	FINISH	SLP
4WTCDD-724HFLSC-1	Tiered Deep Drawer	28-1/2" (724 mm) W x 22-3/16" (564 mm) D x 8-1/32" (204 mm) H	28-1/2" (724 mm)	FLB30	Maple	$596.99
4WTCDD-876HFLSC-1	Tiered Deep Drawer	34-1/2" (877 mm) W x 22-3/16" (564 mm) D x 8-1/32" (204 mm) H	34-1/2" (876 mm)	FLB36	Maple	$631.99
Face Frame Tiered Deep Drawer w/ BLUM Soft-Close						
4WTCDD-30HSC-1	Tiered Deep Drawer	27" (686 mm) W x 22-3/16" (564 mm) D x 8-1/32" (204 mm) H	27" (686 mm)	FFB30	Maple	$541.99
4WTCDD-36HSC-1	Tiered Deep Drawer	33" (839 mm) W x 22-3/16" (564 mm) D x 8-1/32" (204 mm) H	33" (838 mm)	FFB36	Maple	$550.99

Charging Drawer

4WCDB Series



4WCDB-18HFLSC-1-USB

Scan for video



4WCDB-18HSC-1
Charging Drawer



Integrated cord guide mounts to cabinet side and rear wall

- Designed for 18" base cabinet drawers
- Complete drawer system, just add your drawer front
- Natural maple construction with a semi-gloss finish
- Full-extension, undermount w/ BLUM soft-close slides
- Integrated cord guide to ensure safe operation
- Figure 8 door-mounting brackets
- Shock absorbent mat, black
- Overall safety of this product is determined by its end use
- TSCA Title VI compliant

Charging Drawer

- (2) 120V plugs and (2) 2.1 amp USB ports
- Tamper-resistant outlets
- Max Current: AC 12 amps @ 120VAC; USB 2.1 amp & 5VDC
- UL recognized to UL962/ CSA-C22.2 No. 0-10
- Power cord with NEMA 5 – 15 plug

USB

- In-drawer receptacle with thermal fuse protection for heat sensing to prevent overheating, (4) 2.1-amp USB-A ports and (1) USB-C adapter
- Max Current: USB 4.2 amp
- Additional front storage compartment

Frameless USB Charging Drawer w/ BLUM Soft-Close						
PRODUCT	DESCRIPTION	DIMS	MCO	CAB	FINISH	SLP
4WCDB-18HFLSC-1-USB	USB Charging Drawer	16-1/2" (419 mm) W x 23-1/2" (597 mm) D x 4-5/16" (110 mm) H	16-1/2" (419 mm)	FLB18	Maple	$852.99
Frameless Charging Drawer w/ BLUM Soft-Close						
4WCDB-18HFLSC-1	Charging Drawer	16-1/2" (420 mm) W x 22-7/16" (571 mm) D x 4-5/16" (110 mm) H	16-1/2" (419 mm)	FLB18	Maple	$637.99
Face Frame Charging Drawer w/ BLUM Soft-Close						
4WCDB-18HSC-1	Charging Drawer	15" (381 mm) W x 22-7/16" (571 mm) D x 4-5/16" (110 mm) H	15" (381 mm)	FFB18	Maple	$641.99

4WTCD Series

Tiered Cutlery Drawer



4WTCD-18HSC-1

- Designed for 15", 18", 21" and 24" base cabinet drawers
- Complete drawer system, just add your drawer front
- Easy installation
- Natural maple construction with a semi-gloss finish
- Full-extension, undermount w/ BLUM soft-close slides
- Drawer features up to (7) compartments
- Sliding top tray features up to (7) compartments
- Mounts to cabinet drawer front, rear and side walls
- Figure 8 door-mount brackets
- TSCA Title VI compliant

JUST ADD YOUR OWN DRAWER FRONT!

Scan for video



4WTCD-15HSC-1
Face Frame Tiered Cutlery Drawer
(15" base cabinet version shown)



4WTCD-18HSC-1
Face Frame Tiered Cutlery Drawer
(18" base cabinet version shown)



4WTCD-21HSC-1
Face Frame Tiered Cutlery Drawer
(21" base cabinet version shown)



4WTCD-24HSC-1
Face Frame Tiered Cutlery Drawer
(24" base cabinet version shown)



4WTCD-343HFLSC-1
Frameless Tiered Cutlery Drawer
(15" base cabinet version shown)



4WTCD-419HFLSC-1
Frameless Tiered Cutlery Drawer
(18" base cabinet version shown)



4WTCD-495HFLSC-1
Frameless Tiered Cutlery Drawer
(21" base cabinet version shown)



4WTCD-572HFLSC-1
Frameless Tiered Cutlery Drawer
(24" base cabinet version shown)





PRODUCT	DESCRIPTION	DIMS	MCO	CAB	FINISH	SLP
Frameless Tiered Cutlery Drawer, w/ BLUM Soft-Close						
4WTCD-343HFLSC-1	Tiered Cutlery Drawer	13-1/2" (343 mm) W x 21-21/32" (550 mm) D x 4-5/16" (110 mm) H	13-1/2" (343 mm)	FLB15	Maple	$314.99
4WTCD-419HFLSC-1	Tiered Cutlery Drawer	16-1/2" (420 mm) W x 21-21/32" (550 mm) D x 4-5/16" (110 mm) H	16-1/2" (419 mm)	FLB18	Maple	$337.99
4WTCD-495HFLSC-1	Tiered Cutlery Drawer	19-1/2" (496 mm) W x 21-21/32" (550 mm) D x 4-5/16" (110 mm) H	19-1/2" (495 mm)	FLB21	Maple	$363.99
4WTCD-572HFLSC-1	Tiered Cutlery Drawer	22-1/2" (572 mm) W x 21-21/32" (550 mm) D x 4-5/16" (110 mm) H	22-1/2" (572 mm)	FLB24	Maple	$391.99
Face Frame Tiered Cutlery Drawer, w/ BLUM Soft-Close						
4WTCD-15HSC-1	Tiered Cutlery Drawer	12" (305 mm) W x 21-3/4 " (553 mm) D x 4-5/16" (110 mm) H	12" (305 mm)	FFB15	Maple	$282.99
4WTCD-18HSC-1	Tiered Cutlery Drawer	15" (381 mm) W x 21-3/4" (553 mm) D x 4-5/16" (110 mm) H	15" (381 mm)	FFB18	Maple	$321.99
4WTCD-21HSC-1	Tiered Cutlery Drawer	18" (458 mm) W x 21-3/4" (553 mm) D x 4-5/16" (110 mm) H	18" (457 mm)	FFB21	Maple	$331.99
4WTCD-24HSC-1	Tiered Cutlery Drawer	21" (534 mm) W x 21-3/4" (553 mm) D x 4-5/16" (110 mm) H	21" (533 mm)	FFB24	Maple	$356.99

4WTCD Series

Tiered Combination Drawer

- Designed for 30" and 36" base cabinet drawers
- Complete drawer system, just add your drawer front
- Easy installation
- Natural maple construction with a semi-gloss finish
- Full-extension, undermount w/ BLUM soft-close slides
- Drawer features up to (6) compartments and a built-in knife organizer
- Sliding top tray features up to (6) compartments
- Mounts to cabinet side and rear wall
- Figure 8 door-mount brackets
- (1) Foil Wrap Insert included
- Patented design (U.S. Patent No. D843,791)
- TSCA Title VI compliant



4WTCD-876HFLSC-1

Scan for video



4WTCD-724HFLSC-1
Tiered Combination Drawer
(Frameless 30" base cabinet version shown)



4WTCD-36HFLSC-1
Tiered Combination Drawer
(Face Frame 36" base cabinet version shown)



Sliding top tray features up to (6) compartments

Frameless Tiered Combination Drawer w/ BLUM Soft-Close

PRODUCT	DESCRIPTION	DIMS	MCO	CAB	FINISH	SLP
4WTCD-724HFLSC-1	Tiered Combination Drawer	28-1/2" (724 mm) W x 22-3/16" (564 mm) D x 4-7/16" (113 mm) H	28-1/2" (724 mm)	FLB30	Maple	$602.99
4WTCD-876HFLSC-1	Tiered Combination Drawer	34-1/2" (877 mm) W x 22-3/16" (564 mm) D x 4-7/16" (113 mm) H	34-1/2" (876 mm)	FLB36	Maple	$646.99

Face Frame Tiered Combination Drawer w/ BLUM Soft-Close

4WTCD-30HSC-1	Tiered Combination Drawer	27" (686 mm) W x 22-1/4" (566 mm) D x 4-7/16" (113 mm) H	27" (686 mm)	FFB30	Maple	$569.99
4WTCD-36HSC-1	Tiered Combination Drawer	33" (839 mm) W x 22-1/4" (566mm) D x 4-7/16" (113 mm) H	33" (838 mm)	FFB36	Maple	$624.99

Tiered K-Cup Drawer

4WTCD Series



- Designed for face frame 18" base cabinet drawers
- Complete drawer system, just add your drawer front
- Easy installation
- Natural maple construction with a semi-gloss finish
- Full-extension, undermount slides w/ BLUM soft-close
- Drawer features (8) compartments
- Sliding top tray holds (40) K-Cups
- Mounts to cabinet side and rear wall
- Figure 8 door-mount bracket
- Patented design (US Patent No. D789,750S1)
- TSCA Title VI compliant



4WTCD-18HSC-KCUP-1
Tiered K-Cup Drawer

Scan for video

Face Frame Tiered K-Cup Drawer w/ BLUM Soft-Close

PRODUCT	DESCRIPTION	DIMS	MCO	CAB	FINISH	SLP
4WTCD-18HSC-KCUP-1	Tiered K-Cup Drawer	15" (381 mm) W x 21-3/4 " (553 mm) D x 4-5/16" (110 mm) H	15" (381 mm)	FFB18	Maple	$337.99

4WCCB Series

Cut-Out Cutting Board Drawer

- Designed for 18" cabinet drawers
- Natural maple construction with a semi-gloss finish
- Full-extension, undermount slides w/ BLUM soft-close slides
- Removable cut-out cutting board
- Removable funnel insert
- Odor-reducing stopper
- 5/8" drawer side walls
- Figure 8 door-mount brackets
- Drawer front not included
- Waste container not included
- TSCA Title VI compliant



4WCCB-419HFLSC-1



Odor-reducing seal



Removable food funnel for easy cleanup

Scan for video

Frameless Cut-Out Cutting Board Drawer w/ BLUM Soft-Close						
PRODUCT	DESCRIPTION	DIMS	MCO	CAB	FINISH	SLP
4WCCB-419HFLSC-1	Cut-Out Cutting Board Drawer	16-1/2" (420 mm) W x 21-21/32" (550 mm) D x 4-5/16" (110 mm) H	16-1/2" (419 mm)	FLB18	Maple	$420.99
Face Frame Cut-Out Cutting Board Drawer w/ BLUM Soft-Close						
4WCCB-18HSC-1	Cut-Out Cutting Board Drawer	15" (381 mm) W x 21-3/4" (553mm) D x 4-5/16" (110 mm) H	15" (521 mm)	FFB18	Maple	$406.99

Combination Knife Holder/Cutting Board Drawer

4KCB Series



4KCB-419HFLSC-1

- Designed for 18", 21" and 24" cabinets with a 1-1/2" face frame and 18" frameless cabinets with 3/4" sides
- Complete drawer system, just add your drawer front
- Natural maple construction with a semi-gloss finish
- Full-extension, undermount w/ BLUM soft-close slides
- Drawer features up to (4) compartments and built-in knife organizer holds up to (6) knive
- Mounts to cabinet drawer front, rear and side walls
- Figure 8 door-mount brackets
- Built-in locking mechanism
- (1) wood cutting board
- Drawer front not included
- TSCA Title VI compliant



Top tier stores the included cutting board



4KCB-21HSC-1
Combination Drawer
(21" version shown)



4KCB-18HSC-1
Combination Drawer
(18" version shown)

Scan for video

Frameless Combination Knife Holder/ Cutting Board Drawer w/ BLUM Soft-Close

PRODUCT	DESCRIPTION	DIMS	MCO	CAB	FINISH	SLP
4KCB-419HFLSC-1	Combination Drawer	16-1/2" (420 mm) W x 21-21/32" (550 mm) D x 4-13/32" (112 mm) H	16-1/2" (419 mm)	FLB18	Maple	$396.99
Combination Knife Holder/ Cutting Board Drawer w/ BLUM Soft-Close						
4KCB-18HSC-1	Combination Drawer	15" (381 mm) W x 21-3/4" (553 mm) D x 4-13/32" (112 mm) H	15" (381 mm)	FFB18	Maple	$383.99
4KCB-21HSC-1	Combination Drawer	18" (458 mm) W x 21-3/4" (5534 mm) D x 4-13/32" (112 mm) H	18" (457 mm)	FFB21	Maple	$424.99
4KCB-24HSC-1	Combination Drawer	21" (534 mm) W x 21-3/4 " (553 mm) D x 4-13/32" (112 mm) H	21" (533 mm)	FFB24	Maple	$456.99

4TT Series

Wood Tambour Table

- Designed for 1-1/2" face frame 24" base cabinet drawers
- Complete drawer system, just add your drawer front
- Easy installation
- Natural maple construction with a semi-gloss finish
- Over-extension, 220 lb. rated, table slides (static load)
- Adds 31-3/4" counter-top space
- Mounts to cabinet drawer rail and rear wall
- Patented door-mount brackets with 5" of adjustability and micro-trim adjuster (US Patent No. 8,388,076)
- TSCA Title VI compliant

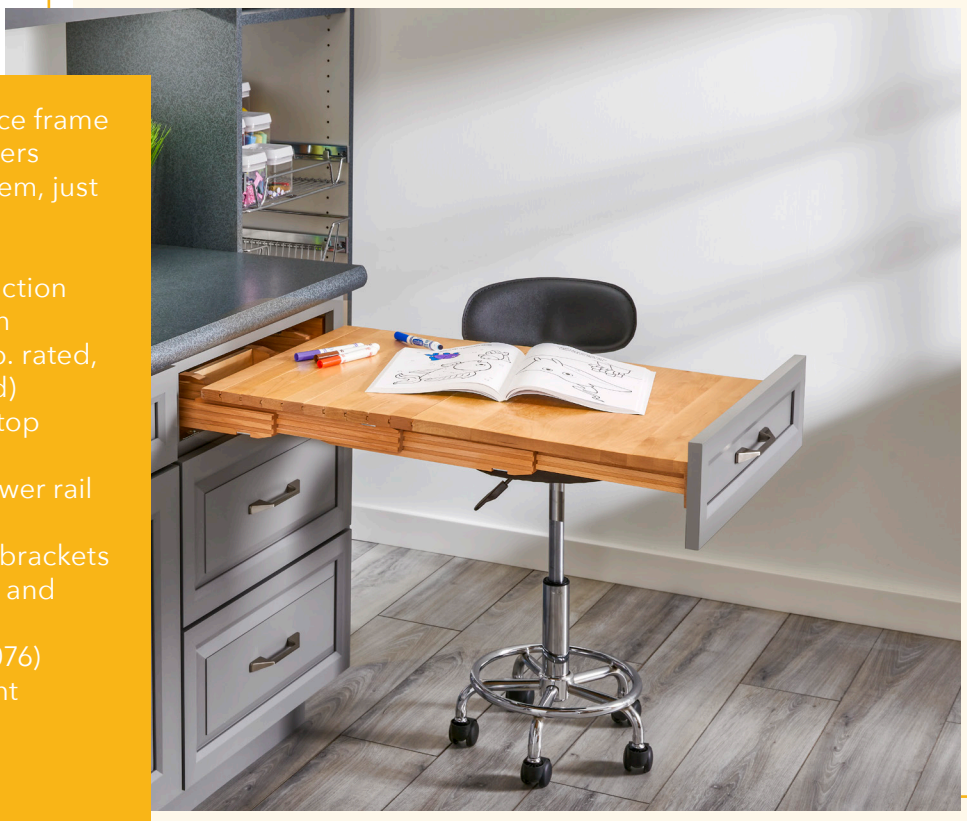

4TT-2133-1



4TT-2133-1
Tambour Table



Face Frame Wood Tambour Table

PRODUCT	DESCRIPTION	DIMS	MCO	CAB	FINISH	SLP
4TT-2133-1	Tambour Table	22" (559 mm) W x 19-15/16 - 24" (507 - 610 mm) D x 4-3/4" (121 mm) H	20-1/2" (521 mm) - FF 22" (559 mm) - FL	FFB24	Maple	$553.99

Wood Cutlery Tray Insert

4WCT Series



- Designed for 24" or smaller base cabinet drawers
- Trim-to-fit existing drawer
- Drop-in installation
- Natural maple construction with a semi-gloss finish or walnut construction with a satin finish
- Up to (9) compartments
- Shallow height sizes available
- Compatible with 4WD Wood Divider (Pg. 223) when using multiple inserts
- TSCA Title VI compliant

4WCT-WN-1SH/ 4WD-22SH-WN-1

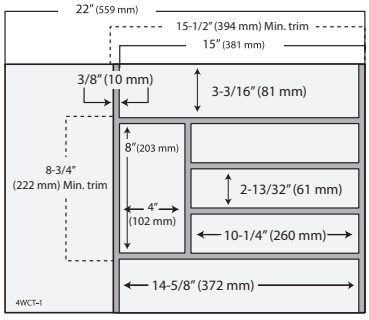

4WCT-1

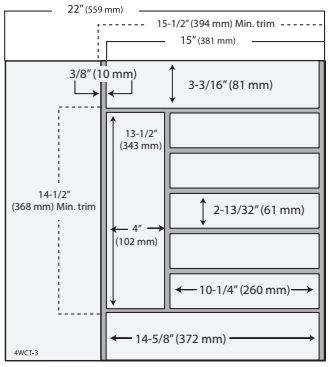

4WCT-3

Scan for video

Wood Cutlery Tray Insert

PRODUCT	DESCRIPTION	DIMS	FINISH	SLP
4WCT-1	Cutlery Tray	14-5/8" (372 mm) W x 22" (559 mm) D x 2-21/32" (67 mm) H	Maple	$99.99
4WCT-3	Cutlery Tray	20-5/8" (524 mm) W x 22" (559 mm) D x 2-21/32" (67 mm) H	Maple	$130.99
Shallow Wood Cutlery Tray Insert				
4WCT-WN-1SH	Shallow Height Cutlery Tray	15-1/8" (384 mm) W x 22" (559 mm) D x 2-3/8" (60 mm) H	Walnut	$185.99
4WCT-WN-3SH	Shallow Height Cutlery Tray	21-1/8" (537 mm) W x 22" (559 mm) D x 2-3/8" (60 mm) H	Walnut	$248.99
4WCT-1SH	Shallow Height Cutlery Tray	14-5/8" (371 mm) W x 22" (559 mm) D x 2-3/8" (60 mm) H	Maple	$89.99
4WCT-3SH	Shallow Height Cutlery Tray	20-5/8" (524 mm) W x 22" (559 mm) D x 2-3/8" (60 mm) H	Maple	$125.99

4WUT Series

Wood Utensil Tray Insert



Scan for video

- Designed for 36" or smaller base cabinet drawers
- Trim-to-fit existing drawer
- Drop-in installation
- Natural maple construction with a semi-gloss finish or walnut construction with a satin finish
- Up to (2) adjustable compartments
- Up to (12) static compartments
- Shallow height sizes available
- Compatible with 4WD Wood Divider (Pg. 223) when using multiple inserts
- TSCA Title VI compliant

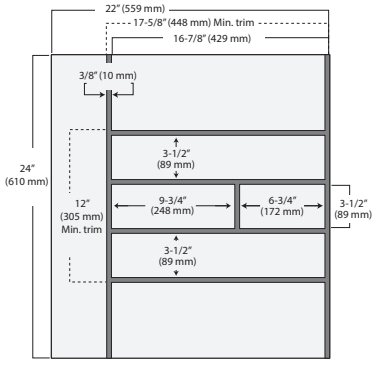

4WUT-3

4WUTKB-36-1

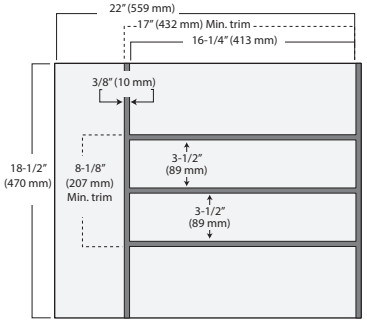

4WUT-1

REV-A-SHELF



4WUT-WN-1SH
Wood Utensil Tray Insert
(Walnut finish shown)



4WUT-36-1
Wide Utensil Drawer Insert



4WUTCT-36-1
Wide Utensil/Cutlery Drawer Insert



4WUTKB-36-1
Wide Knife Block/Utensil Drawer Insert

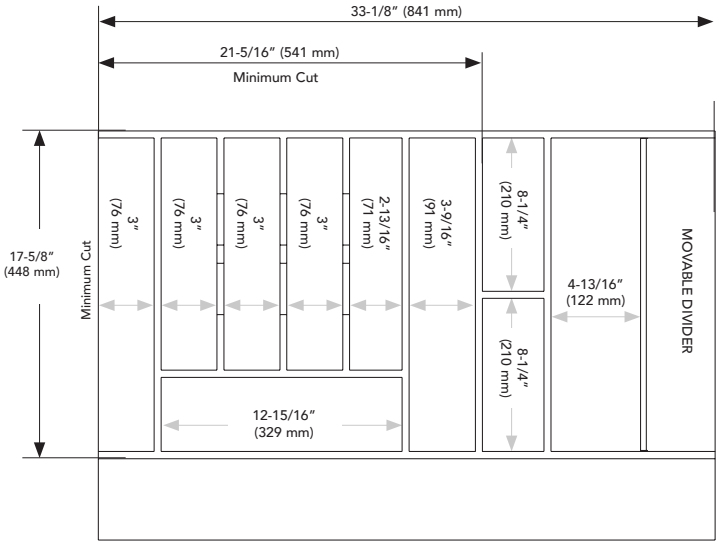

4WUTCT-36-1

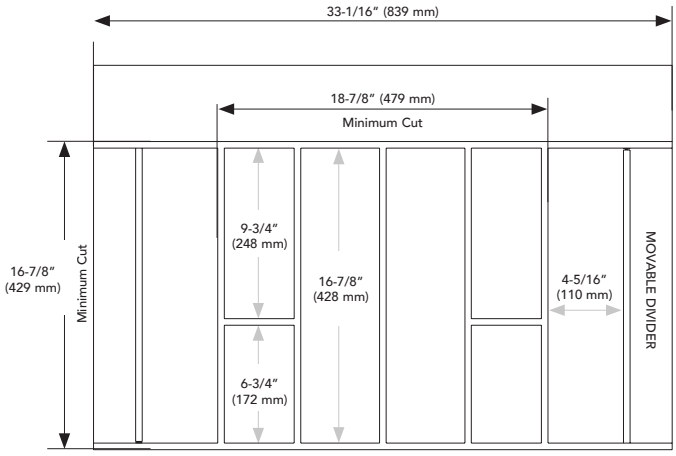

4WUT-36-1

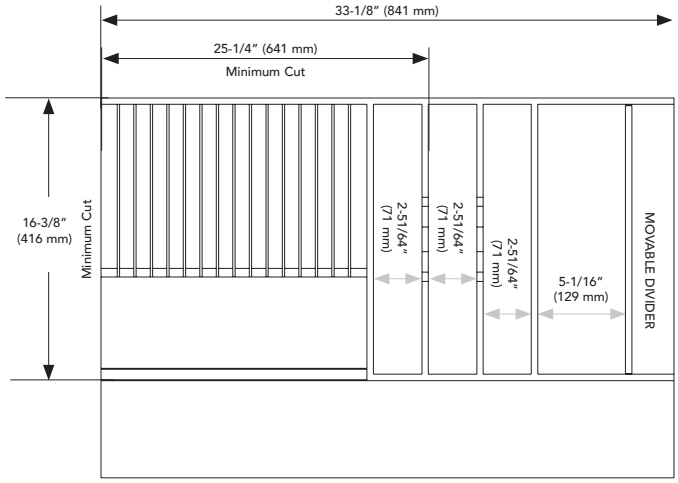

4WUTKB-36-1

Wide Drawer Inserts				
PRODUCT	DESCRIPTION	DIMS	FINISH	SLP
4WUT-36-1	Utensil Drawer Insert	33-1/8" (841 mm) W x 22" (559 mm) D x 2-7/8" (73 mm) H	Maple	$229.99
4WUTKB-36-1	Knife Block/Utensil Drawer Insert	33-1/8" (841 mm) W x 22" (559 mm) D x 2-7/8" (73 mm) H	Maple	$311.99
4WUTCT-36-1	Utensil/Cutlery Drawer Insert	33-1/8" (841 mm) W x 22" (559 mm) D x 2-7/8" (73 mm) H	Maple	$235.99
4WUT-36SH-1	Shallow Utensil Drawer Insert	33-1/8" (841 mm) W x 22" (559 mm) D x 2-3/8" (60 mm) H	Maple	$224.99
4WUTKB-36SH-1	Shallow Knife Block/Utensil Drawer Insert	33-1/8" (841 mm) W x 22" (559 mm) D x 2-3/8" (60 mm) H	Maple	$277.99
4WUTCT-36SH-1	Shallow Utensil/Cutlery Drawer Insert	33-1/8" (841 mm) W x 22" (559 mm) D x 2-3/8" (60 mm) H	Maple	$228.99
Shallow Wood Utensil Tray Insert				
4WUT-WN-1SH	Shallow Height Utensil Tray	15-1/8" (384 mm) W x 22" (559 mm) D x 2-3/8" (60 mm) H	Walnut	$187.99
4WUT-WN-3SH	Shallow Height Utensil Tray	21-1/8" (537 mm) W x 22" (559 mm) D x 2-3/8" (60 mm) H	Walnut	$251.99
4WUT-1SH	Shallow Height Utensil Tray	18-1/2" (470 mm) W x 22" (559 mm) D x 2-3/8" (60 mm) H	Maple	$102.99
4WUT-3SH	Shallow Height Utensil Tray	24" (610 mm) W x 22" (559 mm) D x 2-3/8" (60 mm) H	Maple	$125.99
Wood Utensil Tray Insert				
4WUT-1	Utensil Tray	18-1/2" (470 mm) W x 22" (559 mm) D x 2-21/32" (67 mm) H	Maple	$105.99
4WUT-3	Utensil Tray	24" (610 mm) W x 22" (559 mm) D x 2-21/32" (67 mm) H	Maple	$135.99

4WCT Series

Right-Fit Cutlery Tray Insert

- Designed for 15", 18", 21", and 24" base cabinet drawers
- 2-3/8" height accommodates shallow drawers
- Easy drop-in installation with no tools or trimming required for 1.5" face frame cabinets with 5/8" drawer sides
- Natural maple construction with a semi-gloss finish
- Features up to (9) compartments
- Compatible with 4FWI Foil Wrap Insert
- TSCA Title VI Compliant



4WCT-18SH-1



4WCT-21SH-1
Right-Fit Cutlery Tray

Right-Fit Cutlery Drawer Insert

PRODUCT	DESCRIPTION	DIMS	FINISH	SLP
4WCT-15SH-1	Cutlery Insert	10-1/4" (261 mm) W x 19-1/2" (496 mm) D x 2-3/8" (60 mm) H	Maple	$73.99
4WCT-18SH-1	Cutlery Insert	13-7/32" (337 mm) W x 19-1/2" (496 mm) D x 2-3/8" (60 mm) H	Maple	$89.99
4WCT-21SH-1	Cutlery Insert	16-7/32" (412 mm) W x 19-1/2" (496 mm) D x 2-3/8" (60 mm) H	Maple	$103.99
4WCT-24SH-1	Cutlery Insert	19-1/4" (489 mm) W x 19-1/2" (496 mm) D x 2-3/8" (60 mm) H	Maple	$116.99

Right-Fit Utensil Tray Insert

4WUT Series



4WUT-18SH-1

- Designed for 15", 18", 21", and 24" base cabinet drawers
- 2-3/8" height accommodates shallow drawers
- Easy drop-in installation with no tools or trimming required for 1.5" face frame cabinets with 5/8" drawer sides
- Natural maple construction with a semi-gloss finish
- Features up to (7) compartments
- Compatible with 4FWI Foil Wrap Insert
- TSCA Title VI Compliant

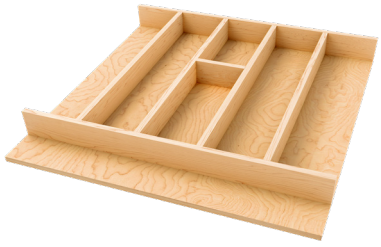

4WUT-24SH-1
Right-Fit Utensil Tray

Right-Fit Utensil Drawer Insert

PRODUCT	DESCRIPTION	DIMS	FINISH	SLP
4WUT-15SH-1	Utensil Insert	10-1/4" (261 mm) W x 19-1/2" (496 mm) D x 2-3/8" (60 mm) H	Maple	$73.99
4WUT-18SH-1	Utensil Insert	13-7/32" (337 mm) W x 19-1/2" (496 mm) D x 2-3/8" (60 mm) H	Maple	$82.99
4WUT-21SH-1	Utensil Insert	16-7/32" (412 mm) W x 19-1/2" (496 mm) D x 2-3/8" (60 mm) H	Maple	$103.99
4WUT-24SH-1	Utensil Insert	19-1/4" (489 mm) W x 19-1/2" (496 mm) D x 2-3/8" (60 mm) H	Maple	$111.99

4DP Series

Drawer Peg System



4DPS-3921

- Designed for 42" or smaller base cabinet deep drawers
- Trim-to-fit existing drawer
- Drop-in installation
- Natural maple construction with a semi-gloss finish, walnut construction with a satin finish or natural maple construction with sound dampening vinyl covering
- Up to (120) pre-drilled peg holes
- (9), (12) or (16) matching, press-in pegs included (maple and walnut only)
- Compatible with chrome accessories (sold separately)
- TSCA Title VI compliant



Think outside the box



Perfect for vanities



Mix and match accessories for the perfect drawer solution



4DPS-WN-2421
Drawer Peg System
(Walnut version shown)



4DPBG-3021-1
Drawer Peg Board
(Vinyl finish shown)

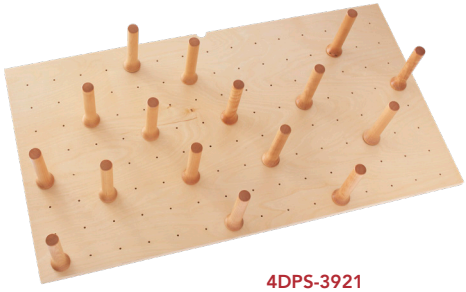

4DPS-3921
Drawer Peg System
(Maple finish shown)



4DPS-PEG-WN-4
(4) Wood Pegs
(Walnut finish shown)



DPS-PEG-4SS
(4) Stainless-Steel Pegs



5DCH-2-1-CR
(2) Stainless-Steel Containers



5DLD-1-CR
Lid Organizer

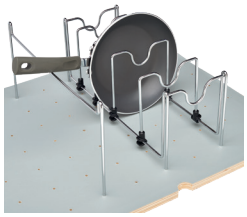

5DCD-1-CR
Pot & Pan Organizer

Drawer Peg System

PRODUCT	DESCRIPTION	DIMS	FINISH	SLP
4DPS-WN-2421	Peg System w/ (9) Pegs	24-1/4" (616 mm) W x 21-1/4" (540 mm) D x 6-5/8" (168 mm) H	Walnut	$380.99
4DPS-WN-3021	Peg System w/ (12) Pegs	30-1/4" (768 mm) W x 21-1/4" (540 mm) D x 6-5/8" (168 mm) H	Walnut	$473.99
4DPS-WN-3921	Peg System w/ (16) Pegs	39-1/4" (997 mm) W x 21-1/4" (540 mm) D x 6-5/8" (168 mm) H	Walnut	$587.99
4DPS-2421	Peg System w/ (9) Pegs	24-1/4" (616 mm) W x 21-1/4" (540 mm) D x 6-5/8" (168 mm) H	Maple	$151.99
4DPS-3021	Peg System w/ (12) Pegs	30-1/4" (768 mm) W x 21-1/4" (540 mm) D x 6-5/8" (168 mm) H	Maple	$180.99
4DPS-3921	Peg System w/ (16) Pegs	39-1/4" (997 mm) W x 21-1/4" (540 mm) D x 6-5/8" (168 mm) H	Maple	$226.99
Drawer Peg Board - No Pegs				
4DPBG-2421-1	Vinyl Drawer Peg Board	24-1/8" (613 mm) W x 21-1/4" (540 mm) D x 5/8" (16 mm) H	Vinyl	$138.99
4DPBG-3021-1	Vinyl Drawer Peg Board	30-1/8" (765 mm) W x 21-1/4" (540 mm) D x 5/8" (16 mm) H	Vinyl	$164.99
4DPBG-3921-1	Vinyl Drawer Peg Board	39-1/8" (994 mm) W x 21-1/4" (540 mm) D x 5/8" (16 mm) H	Vinyl	$212.99
4DPB-2421	Drawer Peg Board	24-1/4" (616 mm) W x 21-1/4" (540 mm) D x 5/8" (16 mm) H	Maple	$92.99
4DPB-3021	Drawer Peg Board	30-1/4" (769 mm) W x 21-1/4" (540 mm) D x 5/8" (16 mm) H	Maple	$112.99
4DPB-3921	Drawer Peg Board	39-1/4" (997 mm) W x 21-1/4" (540 mm) D x 5/8" (16 mm) H	Maple	$134.99
Accessories				
4DPS-PEG-1	(4) Maple Pegs	1-5/8" (41 mm) W x 1-5/8" (41 mm) D x 6-1/2" (165 mm) H	Maple	$42.99
4DPS-PEG-WN-1	(4) Walnut Pegs	1-5/8" (41 mm) W x 1-5/8" (41 mm) D x 6-1/2" (165 mm) H	Walnut	$95.99
DPS-PEG-1SS	(4) Stainless-Steel Pegs	1-1/4" (32 mm) W x 1-1/4" (32 mm) D x 6" (153 mm) H	Stainless-Steel	$98.99
5DCH-2-1-CR	(2) Stainless-Steel Containers	6-1/2" (165 mm) W x 10-1/4" (260 mm) D x 6-1/2" (165 mm) H	Stainless-Steel	$70.99
5DLD-1-CR	Lid Organizer	5-1/4" (133 mm) W x 16-7/8" (429 mm) D x 5-3/8" (137 mm) H	Chrome	$35.99
5DCD-1-CR	Pot/Pan Organizer	7-3/4" (197 mm) W x 15-1/4" (387 mm) D x 7-5/8" (194 mm) H	Chrome	$45.99

4SDI Series

Wood Spice Drawer Insert

- Designed for 36" or smaller base cabinet drawers
- Trim-to-fit existing drawer
- Drop-in installation
- Natural maple construction with a semi-gloss finish or walnut construction with a satin finish
- (1) rear compartment and up to (3) tiers
- Compatible with 4WD Wood Divider (Pg. 223) when using multiple inserts
- TSCA Title VI compliant

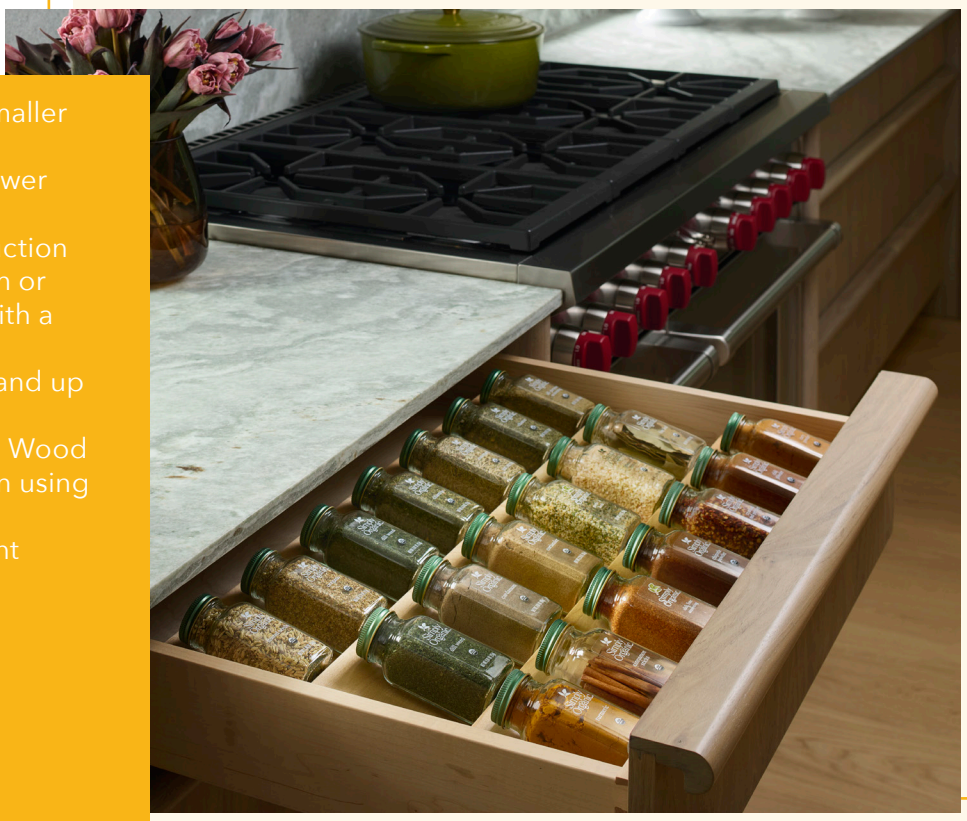

4SDI-36-1

Scan for video



4SDI-WN-18-1
Wood Spice Drawer Insert
(Walnut finish shown)

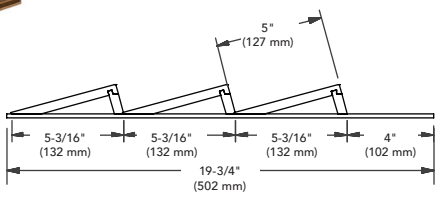

Wood Spice Drawer Insert				
PRODUCT	DESCRIPTION	DIMS	FINISH	SLP
4SDI-WN-18-1	Spice Drawer Insert	16" (407 mm) W x 19-3/4" (502 mm) D x 1-9/16" (39 mm) H	Walnut	$143.99
4SDI-WN-24-1	Spice Drawer Insert	22" (559 mm) W x 19-3/4" (502 mm) D x 1-9/16" (39 mm) H	Walnut	$185.99
4SDI-18	Spice Drawer Insert	16" (407 mm) W x 19-3/4" (502 mm) D x 1-9/16" (39 mm) H	Maple	$102.99
4SDI-24	Spice Drawer Insert	22" (559 mm) W x 19-3/4" (502 mm) D x 1-9/16" (39 mm) H	Maple	$140.99
4SDI-36-1	Spice Drawer Insert	33-1/8" (841 mm) W x 19-3/4" (502 mm) D x 1-3/4" (44 mm) H	Maple	$208.99
Deep Spice Drawer Insert				
4SDI-18T-1	Drawer Insert	13-7/32" (337 mm) W x 19-1/2" (496 mm) D x 1-15/16" (50 mm) H	Maple	$111.99
4SDI-24T-1	Drawer Insert	19-1/4" (489 mm) W x 19-1/2" (496 mm) D x 1-15/16" (50 mm) H	Maple	$148.99

Wood K-Cup Drawer Insert

4CDI Series



4CDI-18-KCUP-1

- Designed for 18" and 24" base cabinet drawers
- Trim-to-fit existing drawer
- Drop-in installation
- Natural maple construction with a semi-gloss finish
- Up to (4) compartments and (5) tiers that hold up to (30) K-Cups
- Compatible with 4WD Wood Divider (Pg. 223) when using multiple inserts
- TSCA Title VI compliant

4CDI-24-KCUP-1
Wood K-CUP Drawer Insert
(24" version shown)



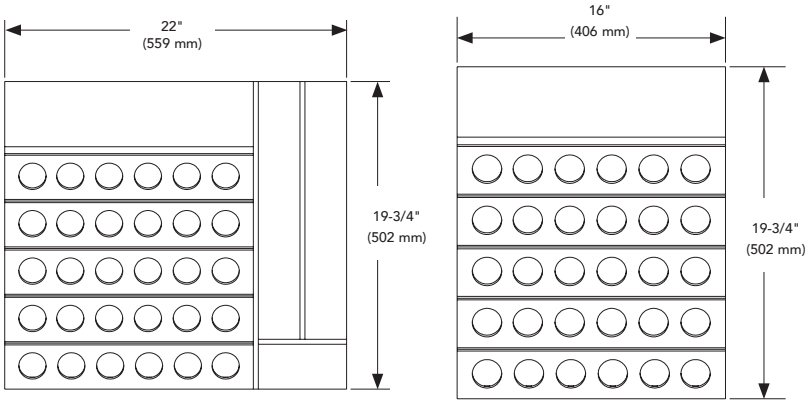

4CDI-24-KCUP-1 4CDI-18-KCUP-1

Scan for video

Wood K-Cup Drawer Insert

PRODUCT	DESCRIPTION	DIMS	FINISH	SLP
4CDI-18-KCUP-1	K-Cup Tray Insert	16" (406 mm) W x 19-3/4" (502 mm) D x 2-3/8" (60 mm) H	Maple	$138.99
4CDI-24-KCUP-1	K-Cup Tray Insert	22" (559 mm) W x 19-3/4" (502 mm) D x 2-3/8" (60 mm) H	Maple	$165.99

4WDKB Series

Double Knife Block Insert



- Designed for 18-1/2" or smaller base cabinet drawers
- Trim-to-fit existing drawer
- Drop-in installation
- Natural maple construction with a semi-gloss finish or walnut construction with a satin finish
- (1) compartment and (2) tiers that include up to (55) knife slots
- Compatible with 4WD Wood Divider (Pg. 223) when using multiple inserts
- TSCA Title VI compliant

Scan for video



4WDKB-WN-1
Wood Double Knife Block
(Walnut finish shown)

Wood Double Knife Block Insert

PRODUCT	DESCRIPTION	DIMS	FINISH	SLP
4WDKB-WN-1	Double Knife Block Insert	18-1/2" (470 mm) W x 22" (559 mm) D x 2" (51 mm) H	Walnut	$473.99
4WDKB-1	Double Knife Block Insert	18-1/2" (470 mm) W x 22" (559 mm) D x 2" (51 mm) H	Maple	$176.99

Wood Knife Block Insert

4WKB Series



- Designed for 18-1/2" or smaller base cabinet drawers
- Trim-to-fit existing drawer
- Drop-in installation
- Natural maple construction with semi-gloss finish
- (1) compartment and up to (19) knife slots
- Compatible with 4WD Wood Divider (Pg. 223) when using multiple inserts
- TSCA Title VI compliant

Wood Knife Block Insert

PRODUCT	DESCRIPTION	DIMS	FINISH	SLP
4WKB-1	Knife Block Insert	18-1/2" (470 mm) W x 22" (559 mm) D x 2-3/8" (60 mm) H	Maple	$139.20

Wood Drawer Divider

4WD Series



4WD-22-1

- Designed for 22" deep or smaller base cabinet drawers
- Trim-to-fit existing drawer
- Natural maple construction with a semi-gloss finish or walnut construction with a satin finish
- 2-3/8" shallow H or 2-7/8" H
- Compatible with 4WCT, 4WUT, 4WKB and 4SDI Inserts
- Easily combine various drawer inserts into wider drawer
- TSCA Title VI compliant

Shallow Height Wood Drawer Divider

PRODUCT	DESCRIPTION	DIMS	FINISH	SLP
4WD-22SH-WN-1	Shallow Height Divider	1/2" (13 mm) W x 22" (559 mm) D x 2-3/8" (60 mm) H	Walnut	$40.99
4WD-22SH-1	Shallow Height Divider	1/2" (13 mm) W x 22" (559 mm) D x 2-3/8" (60 mm) H	Maple	$16.99
Wood Drawer Divider				
4WD-22-1	Divider	1/2" (13 mm) W x 22" (559 mm) D x 2-7/8" (73 mm) H	Maple	$16.99

CT/GCT Series Polymer Cutlery Tray

- Designed for 24" or smaller base cabinet drawers
- Trim-to-fit existing drawer
- Drop-in installation
- Polystyrene construction with textured finish in white or almond, or glossy finish in white or metallic silver
- Up to (7) compartments
- Great for outdoor applications



CT-2W-52



CT-1A-52
Polymer Cutlery Tray
(Almond finish shown)



CT-4W-52
Polymer Cutlery Tray
(White finish shown)

NOTE: Trays can be ordered trimmed to your specifications for an additional charge. Ships with a clear protective coating; remove before use.

Polymer* - Insert (W) for White and (A) for Almond
Glossy Polymer* - Insert (W) for White and (S) For Metallic Silver.

PRODUCT	DESCRIPTION	DIMS	MIN TRIM	FINISH	SLP
Polymer Cutlery Tray					
CT-1*-52	Cutlery Tray	11-1/2" (293 mm) W x 21-1/4" (540 mm) D x 2-3/8" (61 mm) H	8-5/8" (219 mm) W x 17-3/4" (451 mm) D	Polymer	$25.99
CT-2*-52	Cutlery Tray	14-1/4" (362 mm) W x 21-1/4" (540 mm) D x 2-3/8" (61 mm) H	11-5/8" (296 mm) W x 17-3/4" (451 mm) D	Polymer	$25.99
CT-3*-52	Cutlery Tray	17-1/2" (445 mm) W x 21-1/4" (540 mm) D x 2-3/8" (61 mm) H	14-3/4" (375 mm) W x 17-3/4" (451 mm) D	Polymer	$28.99
CT-4*-52	Cutlery Tray	21-7/8" (556 mm) W x 21-1/4" (540 mm) D x 2-3/8" (61 mm) H	18-3/4" (467 mm) W x 17-3/4" (451 mm) D	Polymer	$32.99
CT-1*-10	(10) Cutlery Trays	11-1/2" (293 mm) W x 21-1/4" (540 mm) D x 2-3/8" (61 mm) H	8-5/8" (219 mm) W x 17-3/4" (451 mm) D	Polymer	$16.99ea.
CT-2*-20	(20) Cutlery Trays	14-1/4" (362 mm) W x 21-1/4" (540 mm) D x 2-3/8" (61 mm) H	11-5/8" (296 mm) W x 17-3/4" (451 mm) D	Polymer	$16.99 ea.
CT-3*-20	(20) Cutlery Trays	17-1/2" (445 mm) W x 21-1/4" (540 mm) D x 2-3/8" (61 mm) H	14-3/4" (375 mm) W x 17-3/4" (451 mm) D	Polymer	$18.99 ea.
CT-4*-10	(10) Cutlery Trays	21-7/8" (556 mm) W x 21-1/4" (540 mm) D x 2-3/8" (61 mm) H	18-3/4" (467 mm) W x 17-3/4" (451 mm) D	Polymer	$25.99 ea.
Glossy Polymer Cutlery Tray					
GCT-1*-52	Cutlery Tray	11-1/2" (293 mm) W x 21-1/4" (540 mm) D x 2-3/8" (61 mm) H	8-5/8" (219 mm) W x 17-3/4" (451 mm) D	Polymer	$24.99
GCT-2*-52	Cutlery Tray	14-1/4" (362 mm) W x 21-1/4" (540 mm) D x 2-3/8" (61 mm) H	11-5/8" (296 mm) W x 17-3/4" (451 mm) D	Polymer	$26.99
GCT-3*-52	Cutlery Tray	17-1/2" (445 mm) W x 21-1/4" (540 mm) D x 2-3/8" (61 mm) H	14-3/4" (375 mm) W x 17-3/4" (451 mm) D	Polymer	$28.99
GCT-4*-52	Cutlery Tray	21-7/8" (556 mm) W x 21-1/4" (540 mm) D x 2-3/8" (61 mm) H	18-3/4" (467 mm) W x 17-3/4" (451 mm) D	Polymer	$34.99
GCT-1*-10	(10) Cutlery Trays	11-1/2" (293 mm) W x 21-1/4" (540 mm) D x 2-3/8" (61 mm) H	8-5/8" (219 mm) W x 17-3/4" (451 mm) D	Polymer	$17.99 ea.
GCT-2*-20	(20) Cutlery Trays	14-1/4" (362 mm) W x 21-1/4" (540 mm) D x 2-3/8" (61 mm) H	11-5/8" (296 mm) W x 17-3/4" (451 mm) D	Polymer	$17.99 ea.
GCT-3*-20	(20) Cutlery Trays	17-1/2" (445 mm) W x 21-1/4" (540 mm) D x 2-3/8" (61 mm) H	14-3/4" (375 mm) W x 17-3/4" (451 mm) D	Polymer	$28.99ea.
GCT-4*-10	(10) Cutlery Trays	21-7/8" (556 mm) W x 21-1/4" (540 mm) D x 2-3/8" (61 mm) H	18-3/4" (467 mm) W x 17-3/4" (451 mm) D	Polymer	$19.30ea.

Polymer Utensil Tray

UT/GUT Series



GUT-18A-52

- Designed for 24" or smaller base cabinet drawers
- Trim-to-fit existing drawer
- Drop-in installation
- Polystyrene construction with textured or glossy finish in white, or textured finish in almond
- Up to (4) compartments
- Great for outdoor applications



UT-10A-52
Polymer Utensil Tray
(Almond finish shown)



UT-12A-52
Polymer Utensil Tray
(Almond finish shown)



GUT-15W-52
Polymer Utensil Tray
(White finish shown)

NOTE: Trays can be ordered trimmed to your specifications for an additional charge. Ships with a clear protective coating; remove before use.

* - Insert (W) for White, (A) for Almond. Add "G" to the begining of the product number to designate Glossy finish.

PRODUCT	DESCRIPTION	DIMS	MIN TRIM	FINISH	SLP
Polymer Utensil Tray					
UT-10*-52	Utensil Tray	11-1/2" (293 mm) W x 21-1/4" (540 mm) D x 2-3/8" (61 mm) H	8-5/8" (219 mm) W x 17-3/4" (451 mm) D	Polymer	$32.99
UT-12*-52	Utensil Tray	14-1/4" (362 mm) W x 21-1/4" (540 mm) D x 2-3/8" (61 mm) H	11-5/8" (296 mm) W x 17-3/4" (451 mm) D	Polymer	$33.99
UT-15*-52	Utensil Tray	17-1/2" (445 mm) W x 21-1/4" (540 mm) D x 2-3/8" (61 mm) H	14-3/4" (375 mm) W x 17-3/4" (451 mm) D	Polymer	$35.99
UT-18*-52	Utensil Tray	21-7/8" (556 mm) W x 21-1/4" (540 mm) D x 2-3/8" (61 mm) H	18-3/8" (467 mm) W x 17-3/4" (451 mm) D	Polymer	$22.99
Polymer Utensil Trays					
UT-10*-10	(10) Utensil Trays	11-1/2" (293 mm) W x 21-1/4" (540 mm) D x 2-3/8" (61 mm) H	8-5/8" (219 mm) W x 17-3/4" (451 mm) D	Polymer	$19.99 ea.
UT-12*-20	(20) Utensil Trays	14-1/4" (362 mm) W x 21-1/4" (540 mm) D x 2-3/8" (61 mm) H	11-5/8" (296 mm) W x 17-3/4" (451 mm) D	Polymer	$19.99 ea.
UT-15*-20	(20) Utensil Trays	17-1/2" (445 mm) W x 21-1/4" (540 mm) D x 2-3/8" (61 mm) H	14-3/4" (375 mm) W x 17-3/4" (451 mm) D	Polymer	$20.99 ea
UT-18*-10	(10) Utensil Trays	21-7/8" (556 mm) W x 21-1/4" (540 mm) D x 2-3/8" (61 mm) H	18-3/8" (467 mm) W x 17-3/4" (451 mm) D	Polymer	$22.99

ST50 Series

Polymer Spice Tray



ST50-21A-52

- Designed for 48" or smaller base cabinet drawers
- Trim-to-fit existing drawer
- Drop-in installation
- Polystyrene construction with textured finish, almond or white
- Up to (4) tiers
- Great for outdoor applications

NOTE: Trays can be ordered trimmed to your specifications for an additional charge. Ships with a clear protective coating; remove before use.

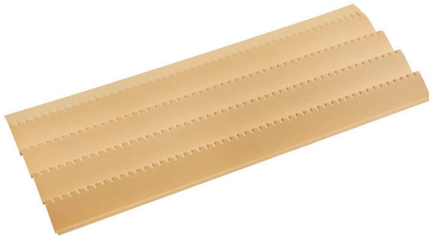

ST50-21A-52
Polymer Spice Tray
(Almond finish shown)

* - Insert (W) for White, (A) for Almond

Polymer Spice Tray				
PRODUCT	DESCRIPTION	DIMS	FINISH	SLP
ST50-21*-52	Spice Tray	50" (1270 mm) W x 20" (508 mm) D x 1-7/8" (48 mm) H	Polymer	$74.99
(12) Polymer Spice Trays				
ST50-21*-12	Spice Trays	50" (1270 mm) W x 20" (508 mm) D x 1-7/8" (48 mm) H	Polymer	$59.99 ea.

Bread Drawer Cover

BDC Series



BDC-200-20

- Designed for 24" or smaller base cabinet drawers
- Trim-to-fit existing drawer
- Easy installation
- Textured polymer available in almond, translucent or white
- Molded-in handle and rear stop
- Includes sliding rails and mounting screws



BDC24-11
Polymer Bread Drawer Cover
(White finish shown)



BDC24-15
Polymer Bread Drawer Cover
(Almond finish shown)

NOTE: Cover is textured to hide scratches. Product available in three colors. These bread drawer covers can be ordered custom cut to your drawer specifications.

** - Insert (11) for White, (15) for Almond and (20) for Translucent (for an additional cost).

Polymer Bread Drawer Cover					
PRODUCT	DESCRIPTION	DIMS	MIN TRIM	FINISH	SLP
BDC-200-**	BDC Kit	16-3/4" (426 mm) W x 21-3/4" (553 mm) D x 3/8" (10 mm) H	11-5/8" (295 mm) x Any Depth	Polymer	$44.99
BDC-200-20	BDC Kit–Translucent w/ Clear Rails	16-3/4" (426 mm) W x 21-3/4" (553 mm) D x 3/8" (10 mm) H	11-5/8" (295 mm) x Any Depth	Polymer	$53.99
Polymer Bread Drawer Cover					
BDC24-**	BDC Kit	20-3/8" (518 mm) W x 21-3/4" (553 mm) D x 3/8" (10 mm) H	16-1/16" (408 mm) x Any Depth	Polymer	$44.99
BDC24-20	BDC Kit–Translucent w/ Clear Rails	20-3/8" (518 mm) W x 21-3/4" (553 mm) D x 3/8" (10 mm) H	16-1/16" (408 mm) x Any Depth	Polymer	$73.99

RAS-**FD Series

File Drawer System

- Designed for 18″ and 21″ base cabinet drawers
- Fits into existing drawer
- Drop-in installation
- Black, powder-coated wire construction
- RAS-LGFD includes T-rod connectors to store legal and letter sizes



RAS-SMFD-52

File Drawer System

PRODUCT	DESCRIPTION	DIMS	MCO	CAB	FINISH	PRICE
RAS-SMFD-52	File System-Letter	13″ (331 mm) W x 19-1/4″ (489 mm) D x 9-3/4″ (248 mm) H	15″ (381 mm)	B18	Black	$31.99
RAS-LGFD-52	File System-Legal	15-7/8″ (404 mm) W x 19-1/4″ (489 mm) D x 9-3/4″ (248 mm) H	18″ (457 mm)	B21	Black	$34.99







WALL SOLUTIONS

ACCESS FROM ABOVE

How do you make more room in a confined space like a wall cabinet? How do you use all the space in your cabinet when you can't reach the shelves? Add Rev-A-Shelf® Wall Accessories. Our wire, polymer and wood spice racks, storage shelves and pullouts expand your limited space. And now, everyone can reach the shelves in your wall cabinet with our revolutionary Pull-Down Shelving System. This popular kitchen convenience is one of the many innovative products introduced as Rev-A-Shelf® continues to change the way you think about cabinet organization!

PROP 65 WARNING FOR CALIFORNIA RESIDENTS

WARNING: These products can expose you to chemicals such as formaldehyde, lead or styrene, which are known to the State of California to cause cancer and birth defects or other reproductive harm. For more information go to www.P65Warnings.ca.gov

REV-A-SHELF®

5PDYO Series

Pull-Down Shelving System



NEW!

- Designed for virtually any wall cabinet up to 36" wide
- Trimmable design accommodates wall cabinet openings 14-1/2"–34-3/4"
- Black sheet metal construction with 5/8" thick maple shelf bottom and backs
- Front rail features an integrated handle for easy operation
- Mounts to cabinet sidewalls
- Gas-spring assisted lifting/lowering mechanism
- Each shelf can hold up to 20 lbs.
- 5PDYO-MB model features "hardware only" without the shelving surfaces for you to add your own 5/8" substrates
- TSCA Title VI compliant

5PDYO-36MB



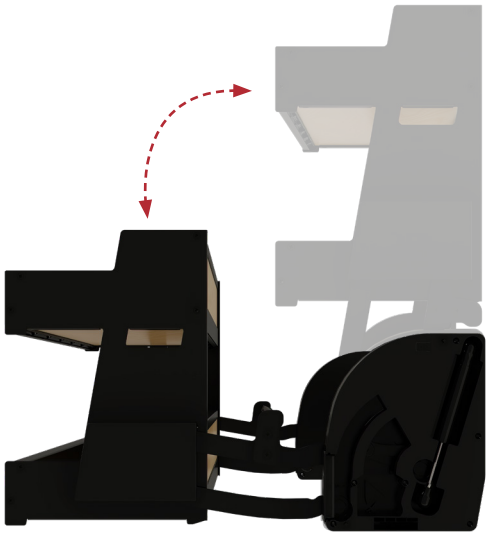

Gas-spring assisted lifting/lowering mechanism



Maple Shelves includes but can be customized with any substrate



5PDYO-MB
Pull-Down Shelving system Hardware



5PDYO-MB
Pull-Down Shelving system



Integrated handle for easy operation

Upright Wall Pullout

PRODUCT	DESCRIPTION	DIMS	MCO	CAB	FINISH	SLP
5PDYO-36MB	Pull-Down Shelving System	20 - 34-3/4" (508 - 883 mm) W x 9-27/32" (250 mm) D x 24-23/32" (629 mm) H	34-3/4" (883 mm)	W36	Black/Maple	$984.99
5PDYO-MB	Hardware Only				Black	$885.99

5WU Series

Upright Wall Pullout



5WU2-3N1-1 and 5WU2-9N3-1

- Designed for 9″ and larger wall cabinets
- Chrome-plated round wire
- (1) or (2) solid bottom shelves, natural compact melamine
- 7/8-extension, ball-bearing slides
- Fits inside cabinet depths of 10-3/4″
- Single or two-tier options
- Available in three widths: 3″, 5″ or 9″
- Modular, multiple units can be combined for a complete storage system
- Mounts to cabinet floor
- TSCA Title VI compliant

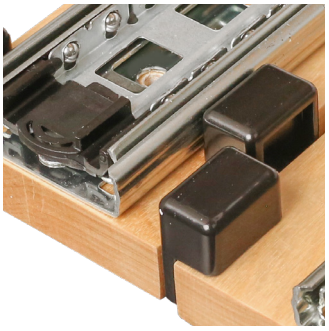

Seamlessly nest units together to make the most of available space

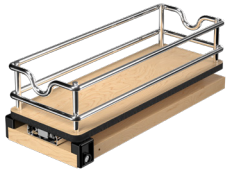

5WU1-5W1-1
5" Upright Wall Pullout



5WU2-5W1-1
5" Two-Tier Upright Wall Pullout



5WU2-9W2-1
9" Two-Tier Upright Wall Pullout



5WU2-3N1-1
3" Two-Tier Upright Wall Pullout



5WU2-9N3-1
9" Two-Tier Upright Wall Pullout



Maximize your cabinet storage space



Unlimited storage options

Upright Wall Pullout

PRODUCT	DESCRIPTION	DIMS	MCO	CAB	FINISH	SLP
5WU1-5W1-1	5" Upright Wall Pullout	4-13/32" (113 mm) W x 10-19/32" (270 mm) D x 3-9/16" (91 mm) H	6" (153 mm)	W9	Maple	$57.99
5WU2-5W1-1	5" Two-Tier Upright Wall Pullout	4-13/32" (113 mm) W x 10-19/32" (270 mm) D x 10-1/2" (267 mm) H	6" (153 mm)	W9	Maple	$86.99
5WU2-9W2-1	9" Two-Tier Upright Wall Pullout	8-19/32" (219 mm) W x 10-19/32" (270 mm) D x 10-1/2" (267 mm) H	9" (229 mm)	W12	Maple	$164.99
Narrow Upright Wall Pullout						
5WU2-3N1-1	3" Two-Tier Narrow Upright Wall Pullout	3-1/32" (77 mm) W x 10-19/32" (270 mm) D x 10-1/2" (267 mm) H	6" (153 mm)	W9	Maple	$70.99
5WU2-9N3-1	9" Two-Tier Narrow Upright Wall Pullout	8-19/32" (219 mm) W x 10-19/32" (270 mm) D x 10-1/2" (267 mm) H	9" (229 mm)	W12	Maple	$180.99

448 Series

Wall Cabinet Pullout



448-BBSCWC-6C

- Designed for 9" and 12" wall cabinets
- Natural maple construction with a semi-gloss finish
- Up to (5) shelves with chrome wire accents
- Full-extension, ball-bearing slides w/ soft-close
- Mounts to cabinet floor and door
- Patented door-mount brackets with 5" of adjustability and micro-trim adjuster (US Patent No. 8,388,076)
- Adjustable rub bushings
- Non soft-close available
- TSCA Title VI compliant

Scan for video

NOTE: See page 162 for base cabinet version



Micro-Adjustment screw for precise door alignment



Adjustable threaded rub bushings included for custom applications



448-BBSCWC-8C
Soft-Close Wall Cabinet Pullout
(8" version shown)



448-BBSCWC-6C
Frameless Wall Cabinet Pullout
w/ Ball-Bearing Soft-Close
(6" version shown)



448-BBSCWC-9C
Frameless Wall Cabinet Pullout
w/ Ball-Bearing Soft-Close
(9" version shown)



448-BBSCWC36-5C
Face Frame 36" Tall
Wall Cabinet Pullout
(5" version shown)



448-BBSCWC36-8C
Face Frame 36" Tall
Wall Cabinet Pullout
(8" version shown)

Frameless Wall Cabinet Pullout w/ Ball-Bearing Soft-Close						
PRODUCT	DESCRIPTION	DIMS	MCO	CAB	FINISH	SLP
448-BBSCWC-6C	Wall Cabinet Pullout	6-1/2" (166 mm) W x 10-3/4" (274 mm) D x 26-5/32 - 27-27/32" (665 - 708 mm) H	7-1/2" (191 mm)	FLW9	Maple	$277.99
448-BBSCWC-9C	Wall Cabinet Pullout	9-1/2" (242 mm) W x 10-3/4" (274 mm) D x 26-5/32 - 27-27/32" (665 - 708 mm) H	10-1/2" (267 mm)	FLW12	Maple	$322.99
Face Frame Wall Cabinet Pullout w/ Ball-Bearing Soft-Close for 36" and Taller Wall cabinets						
448-BBSCWC36-5C	Wall Cabinet Pullout	5" (127 mm) W x 10-3/4" (274 mm) D x 32-5/32 - 33-27/32" (817 - 860 mm) H	5-1/2" (140 mm)	W9	Maple	$304.99
448-BBSCWC36-8C	Wall Cabinet Pullout	8" (204 mm) W x 10-3/4" (274 mm) D x 32-5/32 - 33-27/32" (817 - 860 mm) H	8-1/2" (216 mm)	W12	Maple	$355.99
Face Frame Wall Cabinet Pullout w/ Ball-Bearing Soft-Close for 30" and Taller Wall cabinets						
448-BBSCWC-5C	Wall Pullout for 9"	5" (127 mm) W x 10-3/4" (274 mm) D x 26-5/32 - 27-27/32" (665 - 708 mm) H	5-1/2" (140 mm)	W9	Maple	$244.99
448-BBSCWC-8C	Wall Pullout for 12"	8" (204 mm) W x 10-3/4" (274 mm) D x 26-5/32 - 27-27/32" (665 - 708 mm) H	8-1/2" (216 mm)	W12	Maple	$292.99
Wood Hood Pullout						
448-HP-523C	Wood Hood Pullout	5" (127 mm) W x 10-3/4" (274 mm) D x 23 - 24-11/16" (585 - 627 mm) H	5-1/2" (140 mm)	N/A	Maple	$244.99

5708 Series

Above Appliance Pullout

- Designed for 24" deep wall cabinets
- Chrome round wire construction
- (1) wire bottom shelf
- Full-extension, ball-bearing slides
- 45 lb. weight rating
- Universal mounting, non-handed
- Mounts to cabinet door, floor and side walls
- Pulls out of cabinet as door opens
- Adjustable door-mount brackets



Top

5708-15CR

Scan for video

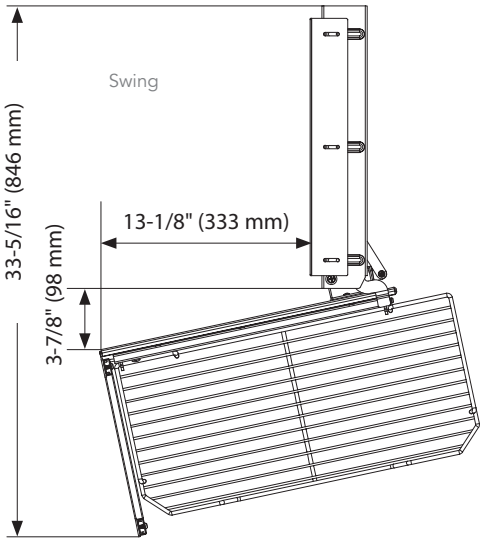

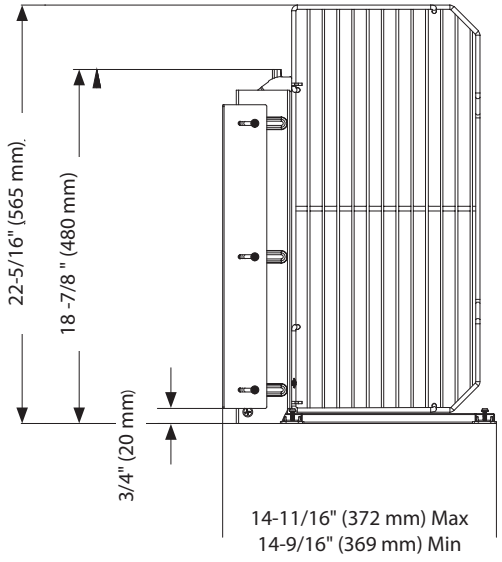

Above Appliance Pullout

PRODUCT	DESCRIPTION	DIMS	MCO	CAB	FINISH	SLP
5708-15CR	Above Appliance Pullout	14 - 15" (356 - 381 mm) W x 21-3/8" (544 mm) D x 15" (381 mm) H	14-3/4" (375 mm)	T33 Butt/ T36	Chrome	$612.99

U-Shaped Tray Divider

596 Series



- Available in 10" height
- Chrome-plated round wire
- Mounts to cabinet floor
- Easy 4-screw installation
- Use multiple to create custom storage space

Chrome Wire U-Shaped Tray Organizer

PRODUCT	DESCRIPTION	DIMS	MCO	FINISH	SLP
596-10CR-52	U-Shaped Tray Divider	3" (77 mm) W x 11-7/8" (302 mm) D x 10" (254 mm) H	3-1/4" (83 mm)	Chrome	$23.99

Tray Divider w/ Clips

597 Series



- Available in 12" height
- Chrome-plated or powder-coated white round wire
- Mounts to cabinet floor and rear wall
- Includes (4) screw-in clips and fasteners each
- Use multiple to create custom storage space

White Wire Tray Divider

PRODUCT	DESCRIPTION	DIMS	FINISH	SLP
597-12-52	Tray Divider with Clips	3/4" (20 mm) W x 20" (508 mm) D x 12" (305 mm) H	White Wire	$14.99
(10) White Wire Tray Dividers				
597-12-10	(10) Tray Dividers with Clips	3/4" (20 mm) W x 20" (508 mm) D x 12" (305 mm) H	White Wire	$10.99 ea.
Chrome Wire Tray Divider				
597-12CR-52	Tray Divider with Clips	3/4" (20 mm) W x 20" (508 mm) D x 12" (305 mm) H	Chrome Wire	$16.99
(10) Chrome Wire Tray Dividers				
597-12CR-10	(10) Tray Dividers with Clips	3/4" (19 mm) W x 20" (508 mm) D x 12" (305 mm) H	Chrome Wire	$13.99 ea.

4SR Series

Door-Mount Spice Rack

- Designed for 15", 18" and 21" wall cabinets
- Natural maple construction with a semi-gloss finish
- 4-screw installation
- (3) shelves with chrome wire accents
- Holds items up to 2-1/4" deep
- Mounts to cabinet door
- Patented adjustable door-mount brackets provide up to 5" of adjustability (US Patent No. 7,204,569)
- TSCA Title VI compliant



4SR-18

NOTE: Height between shelves is 8-5/8" (219 mm)



4SR-15
Spice Rack
(15" version shown)



4SR-21
Spice Rack
(21" version shown)

Door-Mount Spice Rack

PRODUCT	DESCRIPTION	DIMS	MCO	CAB	FINISH	SLP
4SR-15	Spice Rack	10-1/2" (267 mm) W x 3-1/8" (80 mm) D x 21-1/4" (540 mm) H	11-1/2" (292 mm)	W15	Maple	$96.99
4SR-18	Spice Rack	13-1/2" (343 mm) W x 3-1/8" (80 mm) D x 21-1/4" (540 mm) H	14-1/2" (368 mm)	W18	Maple	$108.99
4SR-21	Spice Rack	16-1/2" (420 mm) W x 3-1/8" (80 mm) D x 21-1/4" (540 mm) H	17-1/2" (445 mm)	W21	Maple	$121.99

Adjustable Door-Mount Spice Rack

4ASR Series



- Designed for 15", 18" and 21" wall cabinets
- Natural maple construction with a semi-gloss finish
- 6-screw installation
- (3) adjustable shelves with chrome wire accents
- (2) wood standards
- Holds items up to 2-1/4" deep
- Mounts to cabinet door
- Patented adjustable door-mount brackets provide up to 5" of adjustability (US Patent No. 7,204,569)
- TSCA Title VI compliant

4ASR-18



4ASR-15
Adjustable Spice Rack
(15" version shown)



4ASR-21
Adjustable Spice Rack
(21" version shown)

Adjustable Door-Mount Spice Rack

PRODUCT	DESCRIPTION		MCO	CAB	FINISH	SLP
4ASR-15	Adjustable Spice Rack	10-1/8" (257 mm) W x 4" (102 mm) D x 25" (635 mm) H	12" (305 mm)	W15	Maple	$143.99
4ASR-18	Adjustable Spice Rack	13-1/8" (333 mm) W x 4" (102 mm) D x 25" (635 mm) H	15" (381 mm)	W18	Maple	$170.99
4ASR-21	Adjustable Spice Rack	16-1/8" (410 mm) W x 4" (102 mm) D x 25" (635 mm) H	18" (457 mm)	W21	Maple	$192.99
Bulk Components						
4ASR-25STD-20	(20) Spice Rack Standards	25" (635 mm) H			Maple	$12.99
4ASR-31STD-20	(20) Spice Rack Standards	31" (787 mm) H			Maple	$14.99
4ASR-37STD-20	(20) Spice Rack Standards	37" (940 mm) H			Maple	$16.99
4ASR-15BIN-10	(10) Bins ONLY	10-1/8" (257 mm) W x 3-5/8" (92 mm) D x 3-5/8" (92 mm) H	12" (305 mm)	W15	Maple	$35.99
4ASR-18BIN-10	(10) Bins ONLY	13-1/8" (333 mm) W x 3-5/8" (92 mm) D x 3-5/8" (92 mm) H	15" (381 mm)	W18	Maple	$45.99
4ASR-21BIN-10	(10) Bins ONLY	16-1/8" (410 mm) W x 3-5/8" (92 mm) D x 3-5/8" (92 mm) H	18" (457 mm)	W21	Maple	$52.99

500 Series

Door-Mount Spice Rack

- Designed for 12", 15" and 18" wall cabinets
- White powder-coated wire or orion gray flat wire construction
- Screw-in clips (565 only)
- 4-screw installation
- (4) shelves w/ wire accents
- White wire shelves:
  - Top (3) shelves are 2-3/8" deep bottom shelf is 4-1/8" deep
  - Orion gray shelves are 2-15/32" deep
- Holds items up to 2-1/4" deep
- Adjustable door-mounting brackets with 4" of adjustability (5365 only)
- Mounts to cabinet door



5365-10-FOG



5365-08-FOG
Door-Mount Spice Rack
(Orion Gray finish shown)
4-1/16" (104 mm) between shelves





Adjustable door-mounting brackets with 4" of adjustability (5365 only)

Flat Wire Door-Mount Spice Rack

PRODUCT	DESCRIPTION	DIMS	MCO	CAB	FINISH	SLP
5365-08-FOG	Spice Rack	7-7/8" (200 mm) W x 2-15/32" (63 mm) D x 23-11/32" (593 mm) H	9" (229 mm) - FF 9" (229 mm) - FL	FLW12	Orion Gray	$154.99
5365-10-FOG	Spice Rack	10-5/8" (270 mm) W x 2-15/32" (63 mm) D x 23-11/32" (593 mm) H	12" (305 mm) - FF 12" (305 mm) - FL	FLW15	Orion Gray	$159.99
5365-14-FOG	Spice Rack	13-5/8" (346 mm) W x 2-15/32" (63 mm) D x 23-11/32" (593 mm) H	15" (381 mm) - FF 15" (381 mm) - FL	FLW18	Orion Gray	$165.99

Door-Mount Foil Rack

4WFR Series

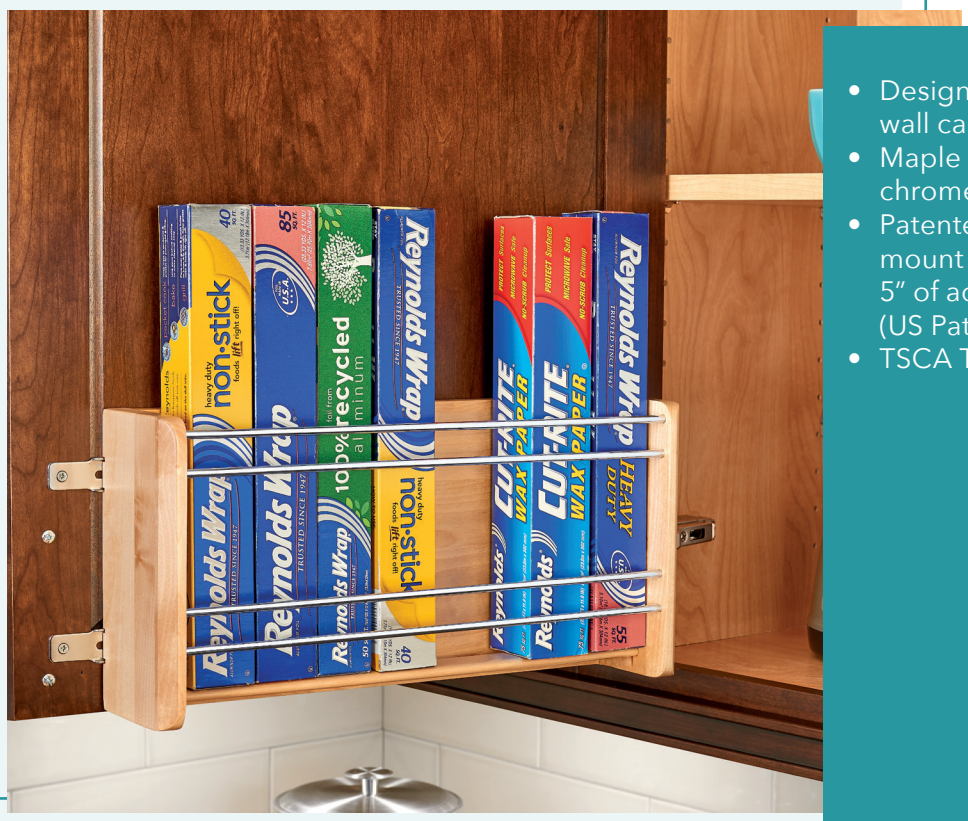

4WFR-21-1

- Designed for 15", 18" and 21" wall cabinets
- Maple construction with chrome accents
- Patented adjustable door-mount brackets provide up to 5" of adjustability (US Patent No. 7,204,569)
- TSCA Title VI compliant

Door-Mount Vertical Foil Rack

PRODUCT	DESCRIPTION	DIMS	MCO	CAB	FINISH	SLP
4WFR-15-1	Vertical Foil Rack	10-1/8" (258 mm) W x 4" (102 mm) D x 8" (204 mm) H	11" (279 mm)	W15	Maple	$93.99
4WFR-18-1	Vertical Foil Rack	13-1/8" (334 mm) W x 4" (102 mm) D x 8" (204 mm) H	14" (356 mm)	W18	Maple	$99.99
4WFR-21-1	Vertical Foil Rack	16-1/8" (410 mm) W x 4" (102 mm) D x 8" (204 mm) H	17" (432 mm)	W21	Maple	$112.99

432 Series

Tiered Wall Filler



Soft Close

- Available for 3" and 6" wall cabinet applications
- Create a functional storage space behind those decorative panels
- Features adjustable shelves with chrome rails
- Full-extension, ball-bearing slides w/ soft-close
- Non soft-close available
- Tri-slide design provides stability
- TSCA Title VI compliant

432-WF36-6C

NOTE: See page 159 for base cabinet version

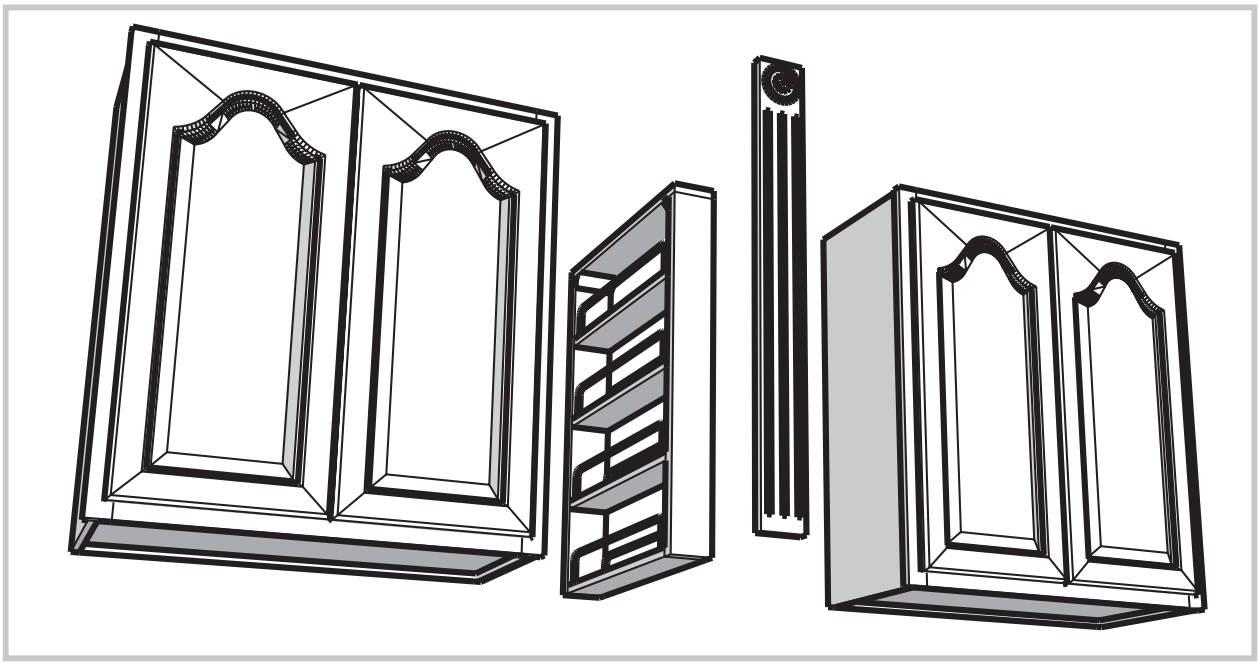

This product installs between two cabinets. Just add you



432-WFBBSC30-3C
Wall Cabinet Filler
(3" version shown)



432-WF33-6C
Wall Cabinet Filler
(6" version shown)



432-WFBBSC36-3C
Wall Cabinet Filler
(3" version shown)



432-WFBBSC39-6C
Wall Cabinet Filler
(6" version shown)



432-WF42-3C
Wall Cabinet Filler
(3" version shown)

Tiered Wall Filler Pullout Organizer w/ Ball-Bearing Soft-Close

PRODUCT	DESCRIPTION	DIMS	FINISH	SLP
432-WFBBSC30-3C	Tiered Filler for 3" Width	3" (77 mm) W x 11-1/8" (283 mm) D x 30" (762 mm) H	Maple	$256.99
432-WFBBSC33-3C	Tiered Filler for 3" Width	3" (77 mm) W x 11-1/8" (283 mm) D x 33" (839 mm) H	Maple	$274.99
432-WFBBSC36-3C	Tiered Filler for 3" Width	3" (77 mm) W x 11-1/8" (283 mm) D x 36" (915 mm) H	Maple	$338.99
432-WFBBSC39-3C	Tiered Filler for 3" Width	3" (77 mm) W x 11-1/8" (283 mm) D x 39" (991 mm) H	Maple	$348.99
432-WFBBSC42-3C	Tiered Filler for 3" Width	3" (77 mm) W x 11-1/8" (283 mm) D x 42" (1067 mm) H	Maple	$358.99
432-WFBBSC30-6C	Tiered Filler for 6" Width	6" (153 mm) W x 11-1/8" (283 mm) D x 30" (762 mm) H	Maple	$269.99
432-WFBBSC33-6C	Tiered Filler for 6" Width	6" (153 mm) W x 11-1/8" (283 mm) D x 33" (839 mm) H	Maple	$341.99
432-WFBBSC36-6C	Tiered Filler for 6" Width	6" (153 mm) W x 11-1/8" (283 mm) D x 36" (915 mm) H	Maple	$349.99
432-WFBBSC39-6C	Tiered Filler for 6" Width	6" (153 mm) W x 11-1/8" (283 mm) D x 39" (991 mm) H	Maple	$372.99
432-WFBBSC42-6C	Tiered Filler for 6" Width	6" (153 mm) W x 11-1/8" (283 mm) D x 42" (1067 mm) H	Maple	$375.99

3000 Series

Wine & Stemware Rack

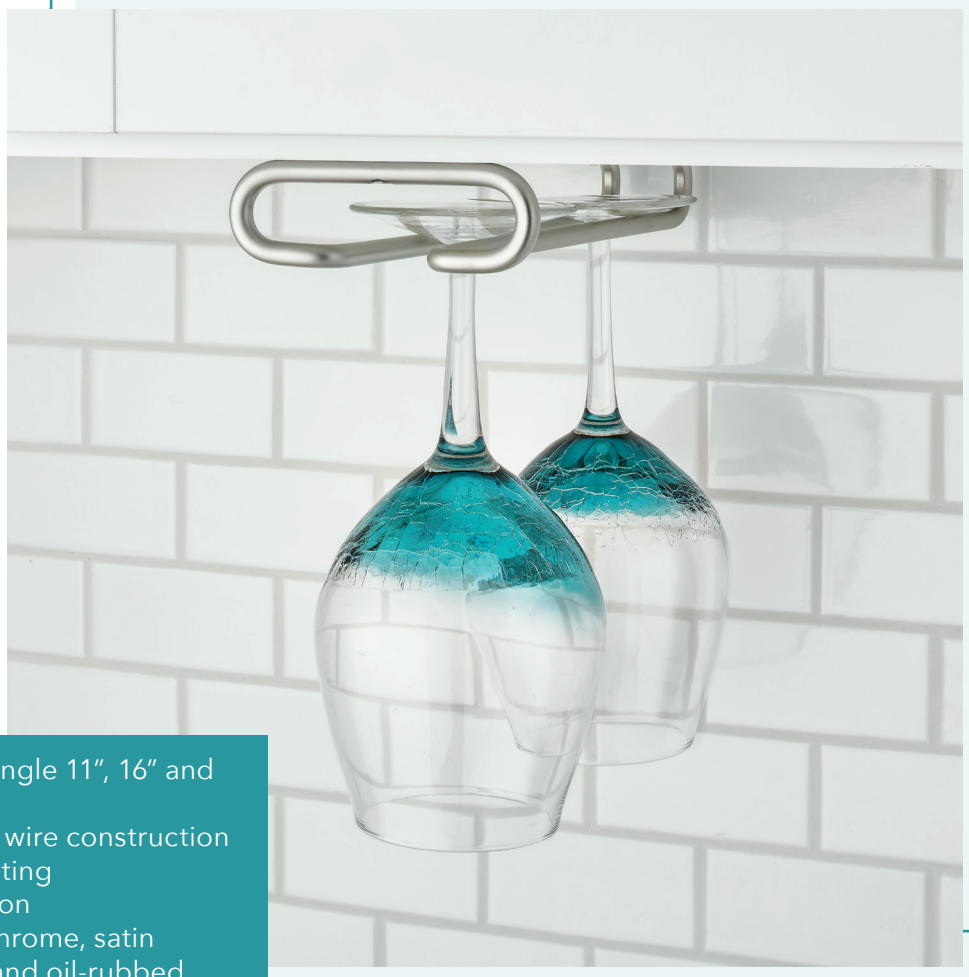

3150-11SN

- Available in single 11", 16" and 18" rack
- Heavy-gauge wire construction
- Hidden mounting
- Easy installation
- Available in chrome, satin nickel, brass and oil-rubbed bronze
- Quad 11" includes (4) single racks fused together for ease of installation



3150-11BR
11″ Stemware Rack
(Brass finish shown)

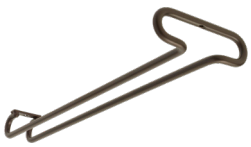

3150-16ORB
16″ Stemware Rack
(Oil-Rubbed Bronze finish shown)

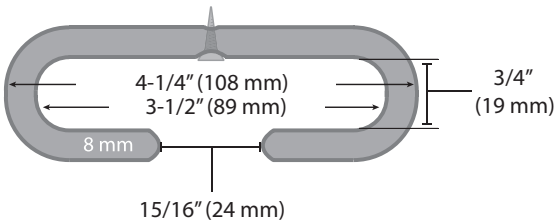



3450-11SN
Quad Stemware Rack
(Satin Nickel finish shown)



3150-18CR
18″ Stemware Rack
(Chrome finish shown)

Wine and Stemware Rack				
PRODUCT	DESCRIPTION	DIMS	FINISH	SLP
3150-11CR	11″ Stemware Rack	4-1/4″ (108 mm) W x 11″ (280 mm) D x 1-1/2″ (39 mm) H	Chrome	$14.99
3150-16CR	16″ Stemware Rack	4-1/4″ (108 mm) W x 16″ (407 mm) D x 1-1/2″ (39 mm) H	Chrome	$17.99
3150-18CR	18″ Stemware Rack	4-1/4″ (108 mm) W x 18″ (458 mm) D x 1-1/2″ (39 mm) H	Chrome	$21.99
3450-11CR	11″ Quad Stemware Rack	17″ (432 mm) W x 11″ (280 mm) D x 1-1/2″ (39 mm) H	Chrome	$61.99
Wine and Stemware Rack				
3150-11SN	11″ Stemware Rack	4-1/4″ (108 mm) W x 11″ (280 mm) D x 1-1/2″ (39 mm) H	Satin Nickel	$14.99
3150-16SN	16″ Stemware Rack	4-1/4″ (108 mm) W x 16″ (407 mm) D x 1-1/2″ (39 mm) H	Satin Nickel	$17.99
3150-18SN	18″ Stemware Rack	4-1/4″ (108 mm) W x 18″ (458 mm) D x 1-1/2″ (39 mm) H	Satin Nickel	$21.99
3450-11SN	11″ Quad Stemware Rack	17″ (432 mm) W x 11″ (280 mm) D x 1-1/2″ (39 mm) H	Satin Nickel	$61.99
Wine and Stemware Rack				
3150-11BR	11″ Stemware Rack	4-1/4″ (108 mm) W x 11″ (280 mm) D x 1-1/2″ (39 mm) H	Brass	$14.99
3150-16BR	16″ Stemware Rack	4-1/4″ (108 mm) W x 16″ (407 mm) D x 1-1/2″ (39 mm) H	Brass	$16.99
3150-18BR	18″ Stemware Rack	4-1/4″ (108 mm) W x 18″ (458 mm) D x 1-1/2″ (39 mm) H	Brass	$21.99
3450-11BR	11″ Quad Stemware Rack	17″ (432 mm) W x 11″ (280 mm) D x 1-1/2″ (39 mm) H	Brass	$61.99
Wine and Stemware Rack				
3150-11ORB	11″ Stemware Rack	4-1/4″ (108 mm) W x 11″ (280 mm) D x 1-1/2″ (39 mm) H	Oil-Rubbed Bronze	$16.99
3150-16ORB	16″ Stemware Rack	4-1/4″ (108 mm) W x 16″ (407 mm) D x 1-1/2″ (39 mm) H	Oil-Rubbed Bronze	$17.99
3150-18ORB	18″ Stemware Rack	4-1/4″ (108 mm) W x 18″ (458 mm) D x 1-1/2″ (39 mm) H	Oil-Rubbed Bronze	$21.99
3450-11ORB	11″ Quad Stemware Rack	17″ (432 mm) W x 11″ (280 mm) D x 1-1/2″ (39 mm) H	Oil-Rubbed Bronze	$61.99

5PD Series Pull-Down Shelf



- Designed for 24" and 36" wall cabinets
- Chrome-plated metal frame
- (2) configurations
  - Wire bottom shelves with chrome wire accents
  - Solid bottom walnut shelves with satin finish and orion gray flat wire accent
- Mounts to cabinet floor and/or side walls
- Side and bottom mount brackets
- Gas-assisted lifting/lowering mechanism
- Locks into down position for hands-free accessibility
- Pulls down 13-1/2" and out 16-3/4"
- TSCA Title VI compliant

Scan for video

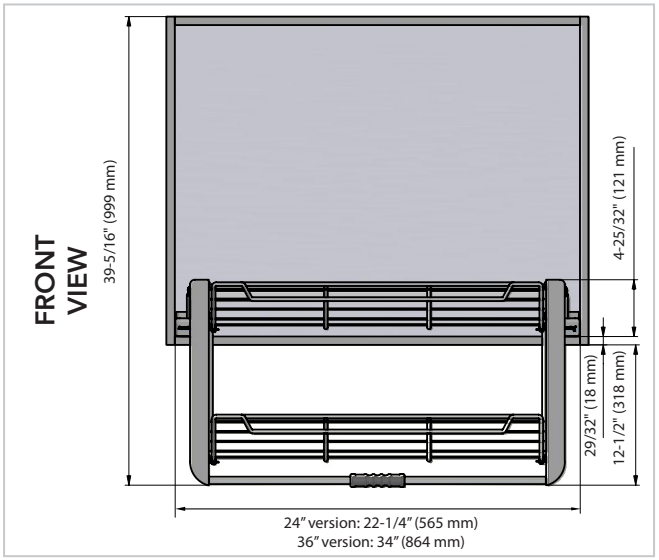

5PD-36FOG

NOTE: Weight capacity: 5PD-24CRN: 17 lb., 5PD-36CRN: 26 lb.

Pull-Down Shelving System

PRODUCT	DESCRIPTION	DIMS	MCOFL	MCOFF	CAB	FINISH	SLP
5PD-24CRN	Pull-Down	22-1/4" (566 mm) W x 10-1/8" (258 mm) D x 18-3/8" (467 mm) H	22-1/2" (572 mm)	21" (534 mm)	W24	Silver/Chrome	$850.99
5PD-36CRN	Pull-Down	34-1/4" (870 mm) W x 10-1/8" (258 mm) D x 18-3/8" (467 mm) H	34-1/2" (876 mm)	33" (838 mm)	W36	Silver/Chrome	$911.99
Solid Bottom Pull-Down Shelving System							
5PD-24FOG	Pull-Down	22-3/16" (564 mm) W x 10-1/8" (258 mm) D x 18-7/32" (463 mm) H	22-1/2" (572 mm)	21" (534 mm)	FLW24	Orion Gray/ Walnut	$865.99
5PD-36FOG	Pull-Down	34-1/32" (865 mm) W x 10-1/8" (258 mm) D x 18-7/32" (463 mm) H	34-1/2" (876 mm)	33" (838 mm)	FLW36	Orion Gray/ Walnut	$927.99







VANITY SOLUTIONS

CONTROL THE CLUTTER

Let's face it – the bathroom is usually one of the hardest areas to keep tidy with all those odds and ends…at least, it used to be. Now, organizing your bathroom with Rev-A-Shelf® is easy with all the storage solutions in our vanity and bathroom accessory line. Hide your unsightly garbage with a pullout waste container, keep dirty clothes off the floor with a removable pullout hamper, expand your bathroom drawer, neatly arrange makeup and more with a cosmetic organizer and power-up your vanity with an electrical drawer or pullout. The choices are limitless. In this section, you'll find everything you need to keep your bathroom organized.

PROP 65 WARNING FOR CALIFORNIA RESIDENTS

WARNING: These products can expose you to chemicals such as formaldehyde, lead or styrene, which are known to the State of California to cause cancer and birth defects or other reproductive harm. For more information go to www.P65Warnings.ca.gov

REV-A-SHELF®

4WHOX Series

Bottom Mount Hamper w/ OXO Container

- Designed for 24" base cabinets
- Natural maple dovetail construction with a semi-gloss finish
- BLUM soft-close slides
- (1) reversible left-hand or right-hand mounted compartment
- (2) Configurations
  - (1) 1.5 BU hamper
  - (1) 1.7 BU hamper, (1) 1.7 qt. OXO container and maple beauty ring
- Mounts to cabinet floor and door
- Patented door-mount brackets with micro-adjustment (US Patent No. 8,338,076)
- TSCA Title VI compliant



4WHOX-24DMSC-1



4WHOX-24FHDMSC-1
1.7 Bushel Hamper Pullout w/ OXO and Storage



Reversible compartment for additional storage

Wood Bottom-Mount Hamper System w/ OXO & Storage

PRODUCT	DESCRIPTION	DIMS	MCO	CAB	FINISH	SLP
4WHOX-24FHDMSC-1	1.7 BU Hamper w/ Storage	20-31/32" (533 mm) W x 22-1/32" (560 mm) D x 24-1/2" (623 mm) H	21" (534 mm)	FHB24	Maple	$722.99
4WHOX-24DMSC-1	1.5 BU Hamper w/ Storage	20-31/32" (533 mm) W x 22-1/32" (560 mm) D x 19-15/16" (507 mm) H	21" (534 mm)	B24	Maple	$712.99
HPB-1223-1	Replacement Hamper				White	$76.99

Maple U-Shaped Vanity Pullout



- Designed for 30" vanity sink base cabinets
- Natural maple construction with a semi-gloss finish
- Full-extension, undermount slides w/ BLUM soft-close
- (4) adjustable dividers, (1) 8 L waste container w/ white lid (BM), or (4) adjustable dividers and (2) removable polycarbonate bins (SM)
- Non-skid vinyl lining
- Mounts to cabinet floor or side walls
- Side and bottom mount brackets
- TSCA Title VI compliant

486-30VSBSC-BM-1



Can be door-mounted



486-30VSBSC-BM-1
Maple U-Shaped Pullout
w/ (4) Adjustable Dividers and
(1) 8 L Container
(Bottom mount unit shown)



486-30VSBSC-SM-1
Maple U-Shaped Pullout
w/ (4) Adjustable Dividers and
(2) Acrylic Bins
(Side mount unit shown)

See pg. 133 for sink base version

Scan for video

U-Shaped Vanity Pullout w/ BLUM Soft-Close

PRODUCT	DESCRIPTION	DIMS	MCO	CAB	FINISH	SLP
486-30VSBSC-BM-1	Bottom Mount	25-21/32" (652 mm) W x 18-11/16" (475 mm) D x 14-1/4" (362 mm) H	25" (635 mm) - FF 25-3/4" (654 mm) - FL	VSB30	Maple	$462.99
486-30VSBSC-SM-1	Side Mount	27-9/16 - 28-3/4" (700 - 731 mm) W x 19 - 20-3/4" (483 - 528 mm) D x 6-1/2" (166 mm) H	25" (635 mm) - FF	VSB30	Maple	$434.99

445-VB Series

Vanity Outlet Grooming Organizer Pullout

- Designed for 12" full-height vanity cabinets with 1-3/4", 1-1/2" and 1-5/8" face frames
- Natural maple construction with a semi-gloss finish
- (2) shelves with acrylic accents
- Full-extension, undermount slides w/ BLUM soft-close
- Patented foldable slide set for easy installation (US Patent No. 10,799,020)
- Mounts to cabinet door, floor and side
- Patented door-mount brackets provide 5" of adjustability and include micro-trim adjuster (US Patent No. 8,388,076)
- Non-skid vinyl lining
- (2) removable stainless-steel bins
- In-drawer receptacle with (2) 120V plugs
- Tamper-resistant outlets
- Max Current: AC 12 amps @ 120VAC
- UL Recognized to UL962/ CSA-C22.2 no. 0-10
- Power cord with NEMA 5 – 15 plug
- Integrated cord guide ensures safe operation
- Patented design prevents items from being accidentally left plugged in when unit is closed (US Patent No. 11,070,038)
- Drawer stop prevents items from being stored "ON" inside the cabinet
- Its end use determines the overall safety of this product
- TSCA Title VI compliant



445-VBOSC-8C



445-VBOSC-8C
Outlet Grooming Organizer

Scan for video

Face Frame Vanity Outlet Grooming Organizer Pullout w/ BLUM Soft-Close

PRODUCT	DESCRIPTION	DIMS	MCO	CAB	FINISH	SLP
445-VBOSC-8C	Grooming Organizer	9-9/32" (236 mm) W x 20 1/8" (511 mm) D x 26-1/8" (664 mm) H	8-1/2" (216 mm) - FF 9-1/2" (241 mm) - FL	FHVB12	Maple	$1000.99

rev-a-shelf.com | 800-626-1126 | info@rev-a-shelf.com

Vanity Outlet Drawer

4VOD Series



4VOD-18SC-1

- Designed for 18" base cabinet drawers
- Natural maple construction with a semi-gloss finish
- Full-extension, undermount slides w/ BLUM soft-close
- (2) compartments
- (2) stainless-steel bins
- In-drawer receptacle with (2) 120V plugs
- Tamper resistant outlets
- Max Current: AC 12 amps @ 120VAC
- UL Recognized to UL962/ CSA-C22.2 No. 0-10
- Power cord with NEMA 5 – 15 plug
- Integrated cord guide ensures safe operation
- Patented design prevents items from being accidentally left plugged in when unit is closed (US Patent No. 11,070,038)
- Door-mounting brackets
- Anti-skid lining
- Drawer front not included
- The overall safety of this product is determined by its end use
- TSCA Title VI compliant



4VOD-18SC-1 & 4VOD-18FLSC-1
Vanity Outlet Drawer

Scan for video

Frameless Vanity Outlet Drawer w/ BLUM Soft-Close

PRODUCT	DESCRIPTION	DIMS	MCO	CAB	FINISH	SLP
4VOD-18FLSC-1	Vanity Outlet Drawer	16-1/2" (420 mm) W x 20-1/8" (511 mm) D x 8-15/16" (227 mm) H	16-1/2" (419 mm)	FLVB18	Maple	$691.99
Face Frame Vanity Outlet Drawer w/ BLUM Soft-Close						
4VOD-18SC-1	Vanity Outlet Drawer	15" (381 mm) W x 20-1/2" (521 mm) D x 8-15/16" (227 mm) H	15" (381 mm)	VB18	Maple	$686.99

4VCOS Series

Vanity Drawer Organizer Insert



- Designed for 22″ or smaller vanity cabinet drawers
- Natural maple construction with a semi-gloss finish
- Trim-to-fit existing drawer
- Drop-in installation
- Anti-skid vinyl lining
- Up to (13) compartments
- (2) clear acrylic lids
- TSCA Title VI compliant

4VCOS-22-1

Scan for video



4VCOS-22-1
Vanity Drawer Organizer Insert

22" Vanity Drawer Organizer Insert

PRODUCT	DESCRIPTION	DIMS	FINISH	SLP
4VCOS-22-1	Vanity Drawer Organizer	21-3/4" (553 mm) W x 21-1/8" (537 mm) D x 2" (51 mm) H	Maple	$176.99

Vanity Drawer Insert

4VDI Series



4VDI-18-1

NEW!

- Designed for 18" vanity base cabinet drawers with 1-1/2" face frames and 5/8" thick drawer boxes
- Natural maple construction with a semi-gloss finish
- Drop-in installation
- (2) storage compartments
- (2) heat-resistant stainless-steel bins, (1) 1.3 qt. polycarbonate bin
- TSCA Title VI compliant

Vanity Drawer Insert w/ Stainless-Steel Bins

PRODUCT	DESCRIPTION	DIMS	MCO	CAB	FINISH	SLP
4VDI-18-1	Vanity Drawer Insert	13-5/32" (335 mm) W x 16-21/32" (423 mm) D x 6-25/32" (172 mm) H	16-1/2" (419 mm)	VDB18	Maple	$225.99

4HD Series

Vanity Appliance Storage Rack

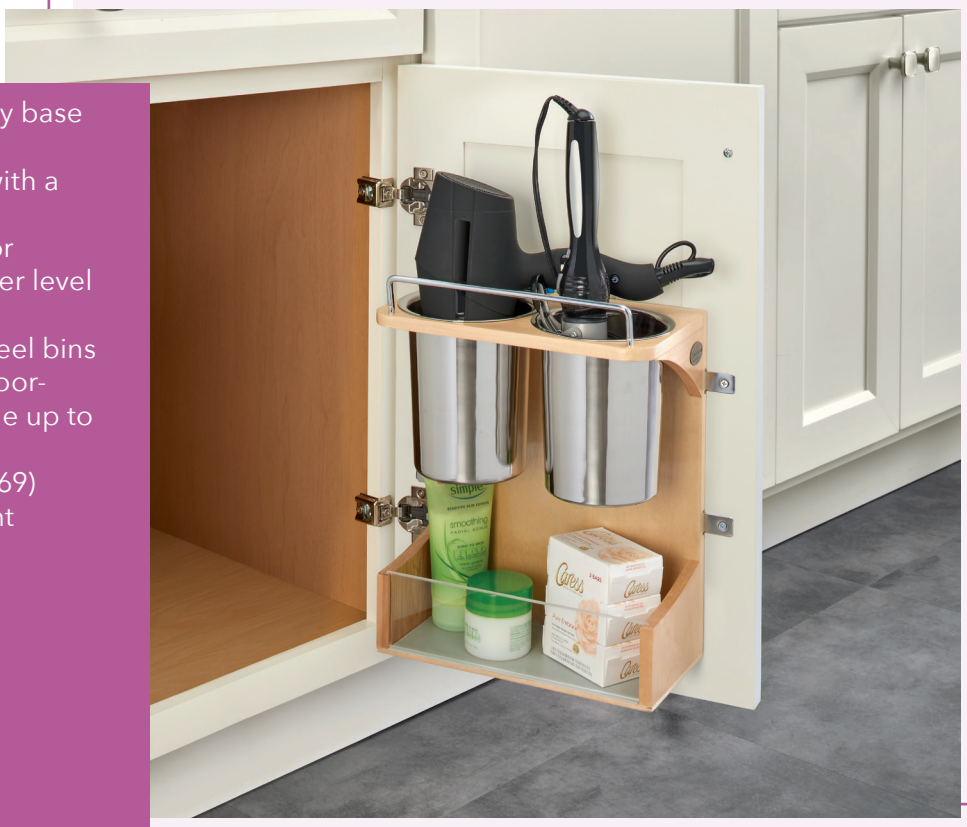

4HD-15-1

- Designed for 30" vanity base (butt door) cabinets
- Natural maple frame with a semi-gloss finish
- Mounts to cabinet door
- Non-skid lining on lower level shelf
- (2) 1.25 qt. stainless-steel bins
- Patented adjustable door-mount brackets provide up to 5" of adjustability (US Patent No. 7,204,569)
- TSCA Title VI compliant

Scan for video



4HD-15-1
Vanity Appliance Storage Rack

Vanity Appliance Storage Rack

PRODUCT	DESCRIPTION	DIMS	MCO	CAB	FINISH	SLP
4HD-15-1	Storage Rack	10-3/4" (274 mm) W x 6" (153 mm) D x 13-7/8" (353 mm) H	12-3/8" (314 mm)	SB30 Butt	Maple	$135.99

Pullout Ironing Board

VIB Series



- Designed for 14-1/2" to 21" vanity cabinet drawer openings
- Complete drawer system, just add your drawer front
- Chrome-plated metal frame
- Over-extension, ball-bearing slides
- Mounts to cabinet side and rear wall
- Built-in ironing board

VIB-20CR



Solid surface counter overlays
CANNOT exceed 1-1/4"



VIB-20CR
Vanity Pullout Ironing Board

See closet section (pg. 273) for more ironing board solutions

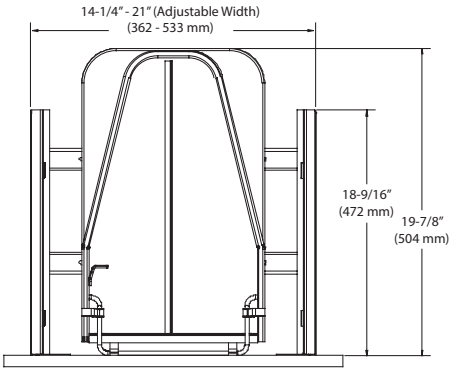

Height = 4" (102 mm)
MIN OPENING: Height = 3-21/32" (93 mm)

NOTE: Not compatible with inset cabinetry

Vanity Pullout Ironing Board

PRODUCT	DESCRIPTION	DIMS	MCO	CAB	FINISH	SLP
VIB-20CR	Pullout Ironing Board	See drawings for detailed specifications.	14-1/4" (362 mm)	VB18	Chrome	$375.99
RAS-VIB-COVER-52	Replacement Cover				Silver	$30.99

441 Series

L-Shaped Vanity Organizer

- Designed for 24" and 30" vanity sink base cabinets
- Natural maple dovetail construction with a semi-gloss finish
- Full-extension, undermount slides w/ BLUM soft-close
- Anti-skid vinyl lining on lower level
- (6) acrylic bins for upper level
- Mounts to cabinet floor
- Patented mounting straps (US Patent No. 9,756,941)
- Patented design (US Patent No. D854,359)
- TSCA Title VI compliant



441-15VSBSC-1

Scan for video



441-12VSBSC-1
Vanity Organizer for 24"

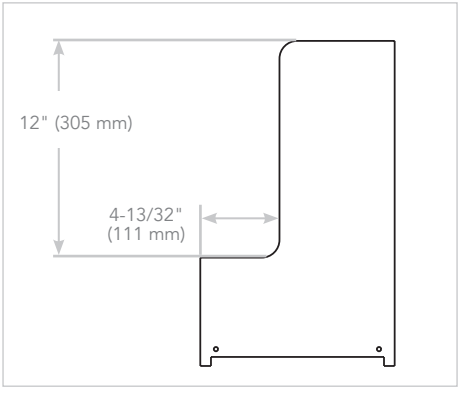

PIPE CLEARANCE DIMENSIONS
(For both units)

L-Shaped Vanity Organizer w/ BLUM Soft-Close

PRODUCT	DESCRIPTION	DIMS	MCO	CAB	FINISH	SLP
441-12VSBSC-1	Vanity Organizer for 24"	8-1/2" (216 mm) W x 18-25/32" (478 mm) D x 18-7/8" (480 mm) H	9-1/4" (235 mm)	VSB24	Maple	$445.99
441-15VSBSC-1	Vanity Organizer for 36"	11-21/32" (297 mm) W x 18-25/32" (478 mm) D x 18-7/8" (480 mm) H	12-5/32" (309 mm)	VSB30	Maple	$538.99

Vanity Storage Rack

4VR Series



4VR-12-1

- Designed for 12", 15", 18", 21" and 24" vanity base cabinets
- Natural maple frame with a semi-gloss finish
- (2) non-skid vinyl shelves with acrylic accents
- Mounts to cabinet door
- Patented adjustable door-mount brackets provide up to 5" of adjustability
  (US Patent No. 7,204,569)
- TSCA Title VI compliant



Patented adjustable door-mounting brackets (US Patent No. 7,204,569)



4VR-18-1
Vanity Storage Rack
(18" version shown)

Door-Mount Vanity Storage Rack

PRODUCT	DESCRIPTION	DIMS	MCO	CAB	FINISH	SLP
4VR-12-1	Storage Rack for 12"	8-1/4" (210 mm) W x 3-1/8" (80 mm) D x 15-1/2" (394 mm) H	9" (229 mm)	VB12	Maple	$115.99
4VR-15-1	Storage Rack for 15"	11-1/4" (286 mm) W x 3-1/8" (80 mm) D x 15-1/2" (394 mm) H	12" (305 mm)	VB15	Maple	$122.99
4VR-18-1	Storage Rack for 18"	14-1/4" (362 mm) W x 3-1/8" (80 mm) D x 15-1/2" (394 mm) H	15" (381 mm)	VB18	Maple	$137.99

4SOWC Series

Door Mount Vanity Waste Container

- Designed for 30" vanity base cabinets
- Single 8 L polymer container, metallic silver
- Natural maple dovetail frame with a semi-gloss finish
- Mounts to cabinet door
- Patented adjustable door-mount brackets provide up to 5" of adjustability (US Patent No. 7,204,569)
- (1) white lid
- TSCA Title VI compliant



Door Mount Vanity Waste Container

PRODUCT	DESCRIPTION	DIMS	MCO	CAB	FINISH	SLP
4SOWC-8-1	Single 8 L	10-3/8" (264 mm) W x 7-3/8" (188 mm) D x 12-5/16" (313 mm) H	12" (305 mm)	VSB30	Silver	$106.99

4WCSC Series

Reduced Depth Bottom Mount Waste Container

- Designed for 30" vanity sink base cabinets and 15" vanity base cabinets
- Single 32 and 35 qt. polymer container, gray (32 qt. only) or metallic silver
- Natural maple dovetail frame with a semi-gloss finish
- Full-extension, undermount slides w/ BLUM soft-close
- Mounts to cabinet door and floor
- Rear storage
- Patented door-mount brackets with 5" of adjustability and micro-trim adjuster (US Patent No. 8,388,076)
- 35 qt. polymer lids available (sold separately)
- TSCA Title VI compliant



4WCSC-1535DM19-1
Single 35 qt. Waste Container, Reduced Depth
(Metallic silver/maple finish shown)



4WCSC-1532DM16-1

Reduced Depth Bottom Mount Waste Container w/ BLUM Soft-Close

PRODUCT	DESCRIPTION	DIMS	MCO	CAB	FINISH	SLP
4WCSC-1220-19-1	Single 20 qt.	8-5/8" (220 mm) W x 18-9/16" (472 mm) D x 16-12" (420 mm) H	8-3/4" (223 mm)	VB24+	Metallic Silver/Maple	$354.99
4WCSC-1532DM16-1	Single 32 qt.	12" (305 mm) W x 15-21/32" (399 mm) D x 19-1/2" (496 mm) H	12" (305 mm)	VB15	Gray/Maple	$425.99
4WCSC-1535DM19-1	Single 35 qt.	12" (305 mm) W x 18-21/32 - 18-5/8" (474 - 474 mm) D x 19-1/2" (496 mm) H	12" (305 mm)	VB15	Metallic Silver/Maple	$462.99

Bottom Mount Wood Hamper

4WH Series



4WH-VCSC-21DM-1

blum

Scan for video

- Designed for face frame 24" vanity base cabinets
- Single 1.5 BU polymer hamper, white
- Natural maple frame with a semi-gloss finish
- Full-extension concealed slides w/ BLUM soft-close
- Mounts to cabinet door and floor
- (1) matching lid
- TSCA Title VI compliant

See closet section (pg. 273) for more hampers

1.5 BU Bottom Mount Hamper Pullout w/ BLUM Soft-Close

PRODUCT	DESCRIPTION	DIMS	MCO	CAB	FINISH	SLP
4WH-VCSC-21DM-1	Hamper Pullout	20-5/16" (516 mm) W x 18-11/16" (475 mm) D x 21-1/4" (540 mm) H	21" (533 mm)	VB24	Maple	$499.99
Accessories						
HPB-03323-52	Replacement Hamper				Polymer	$49.99

Aluminum Bottom Mount Rev-A-Motion®

5149 Series



5149-15DM18-117

MADE IN THE USA

REV-A-MOTION® SOFT OPEN SOFT CLOSE

US PATENT NO: 8,091,971

- Designed for 15" base height vanity cabinets
- Single 35 qt. polymer containers, metallic silver or white
- Anodized aluminum frame, metallic silver or white base
- Full-extension with 1-1/2" over-travel, ball-bearing slides w/ Rev-A-Motion® soft-open/soft-close (US Patent No. 8,091,971)
- Patented door-mount brackets with 5" of adjustability (US Patent No. 8,939,526)

See pg. 74 for more information

Aluminum Bottom Mount Waste Container Pullout w/ Rev-A-Motion® - Reduced Depth

PRODUCT	DESCRIPTION	DIMS	MCO	CAB	FINISH	SLP
5149-15DM18-111	Single 35 qt.	12-1/8" (308 mm) W x 16" (407 mm) D x 19-1/2" (496 mm) H	11-1/2" (292 mm)- FF/ 12-1/4" (311 mm) - FL	VB15	White/Alum	$420.99
5149-15DM18-117	Single 35 qt.	12-1/8" (308 mm) W x 16" (407 mm) D x 19-1/2" (496 mm) H	11-1/2" (292 mm)- FF/ 12-1/4" (311 mm) - FL	VB15	Silver/Alum	$420.99

4VHTM Series

Top Mount Wood Hamper



4VHTM-1520DM-1

- Designed for face frame 18" vanity height and vanity base cabinets
- Single 1.5 BU polymer hamper w/ lid, white
- Natural maple frame with a semi-gloss finish
- Full-extension w/ 2" over-travel, ball-bearing slides
- Mounts to cabinet door, rear and side walls
- Adjustable rear mount brackets and pre-assembled door-mount brackets
- TSCA Title VI compliant

See closet section (pg. 273) for more hampers

*Replacement lid Part No: SP-HPB-LID

Maple Top Mount Pullout Hamper

PRODUCT	DESCRIPTION	DIMS	MCO	CAB	FINISH	SLP
4VHTM-1520DM-1	1.5 BU Hamper	15" (381 mm) W x 19-7/8" (505 mm) D x 20" (508 mm) H	15" (381 mm)	VB18	White/Maple	$222.99
HPB-03323-52	Replacement Hamper	14" (356 mm) W x 18-5/8" (473 mm) D x 18-1/4" (464 mm) H (no lid)*			Polymer	$49.99

REV-A-SHELF

Steel Top Mount Hamper

53TMVH Series



53TMVH-24SCDM-2-FL

- Designed for frameless 24″ vanity base cabinets with 5/8″ or 3/4″ side walls
- Double .85 BU polymer containers, gray and white
- Powder-coated metal frame, white
- Full-extension slides w/ soft-close
- Door-mount brackets
- Mounts to cabinet door and side walls
- Pre-assembled door-mount brackets
- (1) gray and (1) white lid



53TMVH-24SCDM-2-FL
.85 BU Hamper

See closet section (pg. 273) for more hampers

Steel Top Mount Vanity Hamper Pullout w/ Soft-Close

PRODUCT	DESCRIPTION	DIMS	MCO	CAB	FINISH	SLP
53TMVH-24SCDM-2-FL	Top Mount Hamper	22-1/8" (562 mm) W x 21-21/32" (550 mm) D x 19-1/16" (485 mm) H	22-1/8" (562 mm)	FLFHVB24	White/Gray/ Steel	$531.99

HPRV Series

Polymer Bottom Mount Hamper



- Designed for face frame 18" vanity height and vanity base cabinets
- Single 1.5 BU polymer hamper, white
- 4-screw installation
- Powder-coated white wire frame
- Full-extension, ball-bearing slides
- Mounts to cabinet floor
- Door-mount kit available (sold separately)

See closet section (pg. 273) for more hampers



HPRV-1520 S
1.5 BU Hamper

HPRV-1520 S

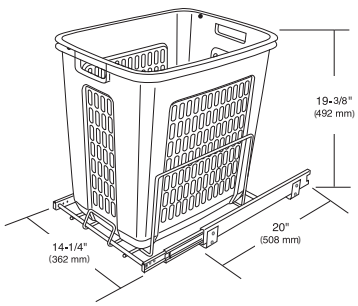

Polymer Bottom Mount Hamper Pullout

PRODUCT	DESCRIPTION	DIMS	MCO	CAB	FINISH	SLP
HPRV-1520 S	1.5 BU Hamper	14-1/4" (362 mm) W x 20" (508 mm) D x 19-3/8" (493 mm) H	14-1/2" (368 mm)	VB18	White/Aluminum	$165.99
Accessories						
HPB-03323-52	Replacement Hamper	14" (356 mm) W x 18-5/8" (473 mm) D x 18-1/4" (464 mm) H			Polymer	$49.99
RV DM KIT	Heavy Duty Door Mount Kit				White	$40.99

Wire Bottom Mount Hamper

HRV Series



HRV-1520 S CR

- Designed for 15" and 18" vanity cabinets
- Single 1, 1.3, 1.4 or 1.7 BU wire hamper
- 4-screw installation
- Chrome-plated or powder-coated white wire frame
- Full-extension, ball-bearing slides
- Mounts to cabinet floor
- (1) 1.7 BU machine washable canvas liner included with HRV-1520 S CR
- Door-mount kit available (sold separately)



HRV-1215 S
1 BU Hamper



HRV-1515 S
1.3 BU Hamper

See closet section (pg. 273) for more hampers

PRODUCT	DESCRIPTION	DIMS	MCO	CAB	FINISH	SLP
Wire Bottom Mount Hamper Pullout						
HRV-1215 S	1.0 BU Hamper	11-7/8" (302 mm) W x 18" (458 mm) D x 14-3/4" (375 mm) H	11-1/2" (292 mm) - FF 12" (305 mm) - FL	VB15	White	$210.99
HRV-1220 S	1.4 BU Hamper	11-7/8" (302 mm) W x 18" (458 mm) D x 19-3/8" (493 mm) H	11-3/4" (298 mm) - FF 12" (305 mm) - FL	VB15	White	$210.99
HRV-1515 S	1.3 BU Hamper	14-3/4" (375 mm) W x 18" (458 mm) D x 14-3/4" (375 mm) H	14-1/2" (368 mm) - FF 14-3/4" (375 mm) - FL	VB18	White	$216.99
HRV-1520 S	1.7 BU Hamper	14-3/4" (375 mm) W x 18" (458 mm) D x 19-3/8" (493 mm) H	14-1/2" (368 mm) - FF 14-3/4" (375 mm) - FL	VB18	White	$228.99
Wire Bottom Mount Hamper Pullout w/ Canvas Liner						
HRV-1520 S CR	1.7 BU Hamper	14-3/4" (375 mm) W x 18" (458 mm) D x 19-3/8" (493 mm) H	14-1/2" (368 mm) - FF 14-3/4" (375 mm) - FL	VB18	Chrome	$240.99
Accessories						
HRV-1520-LINER	1.7 BU Replacement Liner				Tan	$50.99
RV DM KIT	Heavy-Duty Door-Mount Kit				White	$40.99

NOTE: Only HRV-1520 S CR includes (1) liner

5190 Series

Aluminum Bottom Mount Canvas Hamper

REV-A-MOTION SOFT OPEN SOFT CLOSE
US PATENT NO: 8,091,971

- Designed for 18" base height vanity cabinets
- Single 2.1 BU canvas liner, tan (machine washable)
- Anodized aluminum frame, metallic silver or white base
- Full-extension with 1-1/2" over-travel, ball-bearing slides w/ Rev-A-Motion® soft-open/ soft-close (US Patent No. 8,091,971)
- Mounts to cabinet door and floor
- Patented door-mount brackets with 5" of adjustability (US Patent No. 8,939,526)



5190-15RM-117

See closet section (pg. 273) for more hampers

Aluminum Bottom Mount Canvas Hamper w/ Rev-A-Motion®

PRODUCT	DESCRIPTION	DIMS	MCO	CAB	FINISH	SLP
5190-15RM-117	2.1 BU Canvas Hamper w/ Silver Base	14-5/16" (364 mm) W x 18-1/32" (458 mm) D x 19-11/32" (491 mm) H	14-1/2" (368 mm)	VB18	Silver/Tan	$580.99
Accessories						
5190-LINER	Replacement Canvas Liner	12" (305 mm) W x 18" (458 mm) D x 16" (407 mm) H			Tan	$52.99

Aluminum Bottom Mount Wire Hampers

CH Series



CH-241419-RM-217

REV-A-MOTION SOFT OPEN SOFT CLOSE
US PATENT NO: 8,091,971

- Designed for 27" base height vanity cabinets
- Double 1.2 BU wire hampers, with (2) canvas liners, machine washable
- Anodized aluminum frame, metallic silver
- Full-extension with 1-1/2" over-travel, ball-bearing slides w/ Rev-A-Motion® soft-open/soft-close (US Patent No. 8,091,971)
- Mounts to cabinet door and floor
- Patented door-mount brackets with 5" of adjustability (US Patent No. 8,939,526)



CH-241419-RM-217
Double 1.2 BU Hampers
w/ Silver Base

See closet section (pg. 273) for more hampers

Scan for video

Aluminum Bottom Mount Wire Hamper w/ Rev-A-Motion®

PRODUCT	DESCRIPTION	DIMS	MCO	CAB	FINISH	SLP
CH-241419-RM-217	Double 1.2 BU Hampers w/ Silver Base	24" (610 mm) W x 13-15/16" (355 mm) D x 18-7/8" (480 mm) H	24" (610 mm)	VB27	Silver/Tan	$733.99
Accessories						
5CHB-Liner	Replacement Canvas Liner				Tan	$32.99

4WH Series

Bottom Mount Rev-A-Motion®



- Designed for 18" full height vanity and vanity base cabinets
- Single 1.5 BU polymer hamper w/ lid, white
- Natural maple frame with a semi-gloss finish
- Full-extension with 1-1/2" over-travel, ball-bearing slides w/ Rev-A-Motion® soft-open/soft-close (US Patent No. 8,091,971)
- Mounts to cabinet door and floor
- Pre-assembled door-mount brackets
- TSCA Title VI compliant

4WH-RM-15DM-1

US PATENT NO: 8,091,971

REV-A-MOTION SOFT OPEN SOFT CLOSE

See closet section (pg. 273) for more hampers

*Replacement lid Part No: SP-HPB-LID

Bottom Mount Hamper Pullout w/ Rev-A-Motion®

PRODUCT	DESCRIPTION	DIMS	MCO	CAB	FINISH	SLP
4WH-RM-15DM-1	1.5 BU Hamper	14-1/4" (362 mm) W x 19-3/4" (502 mm) D x 21" (534 mm) H	14-1/2" (381 mm) - FF 14-1/2" (381 mm) - FL	FHVB18	White/Maple	$553.99
HPB-03323-52	Replacement Hamper	14" (356 mm) W x 18-5/8" (473 mm) D x 18-1/4" (464 mm) H (no lid)*			Polymer	$49.99

Pullout Vanity Fillers

432-VF Series



432-VF26SC-6

- Designed for 3" and 6" vanity filler applications
- Natural maple frame with a semi-gloss finish
- Full-extension, undermount slides w/ BLUM soft-close
- Patented undermount soft-close slide system (US Patent No. 8,733,865)
- Mounts between cabinets
- Adjustable shelves with clear rails and non-skid vinyl lining
- (4) or (6) polycarbonate bins
- TSCA Title VI compliant



432-VF30SC-3
3" Vanity Base Height Filler w/ (6) Bins

NOTE: Polycarbonate Bins = 7" (178 mm) W x 1-3/4" (45 mm) D x 2-1/4" (57 mm) H

Vanity Filler Pullout w/ BLUM Soft-Close

PRODUCT	DESCRIPTION	DIMS	FINISH	SLP
432-VF26SC-3	3" Vanity Filler w/ (4) Bins	3" (77 mm) W x 19" (483 mm) D x 26" (661 mm) H	Maple	$473.99
432-VF26SC-6	6" Vanity Filler w/ (4) Bins	6" (153 mm) W x 19" (483 mm) D x 26" (661 mm) H	Maple	$571.99
432-VF30SC-3	3" Vanity Base Height Filler w/ (6) Bins	3" (77 mm) W x 19" (483 mm) D x 30" (762 mm) H	Maple	$540.99
432-VF30SC-6	6" Vanity Base Height Filler w/ (6) Bins	6" (153 mm) W x 19" (483 mm) D x 30" (762 mm) H	Maple	$638.99

445 Series

Grooming Organizer

- Designed for 12" full-height face frame vanity cabinets
- Natural maple frame with a semi-gloss finish
- Full-extension, undermount slides w/ BLUM soft-close
- Mounts to cabinet door and floor
- Adjustable shelves with clear rails and non-skid vinyl lining
- (2) stainless-steel bins
- Patented door-mount brackets provide 5" of adjustability and include micro-trim adjuster (US Patent No. 8,388,076)
- Patented design (US Patent No. D596,424)
- TSCA Title VI compliant



445-VCG25SC-8



445-VCG20SC-8
8" Vanity Grooming Organizer

Grooming Organizer Pullout w/ BLUM Soft-Close

PRODUCT	DESCRIPTION	DIMS	MCO	CAB	FINISH	SLP
445-VCG20SC-8	8" Vanity Grooming Organizer	8-7/16" (215 mm) W x 19-9/16" (497 mm) D x 20-3/8" (518 mm) H	9" (227 mm)	FHVB12	Wood	$495.99
445-VCG25SC-8	8" Base Height Vanity Grooming Organizer	8-7/16" (215 mm) W x 19-9/16" (497 mm) D x 25-9/16" (650 mm) H	9" (227 mm)	FHVB12	Wood	$583.99

Vanity Tiered Organizer

448 Series



448-VC25SC-8

- Designed for 12" full-height face frame vanity cabinets
- Natural maple frame with a semi-gloss finish
- Full-extension, undermount slides w/ BLUM soft-close
- Mounts to cabinet door and floor
- Adjustable shelves with clear rails and non-skid vinyl lining
- (6) or (9) polycarbonate bins
- Patented door-mount brackets provide 5" of adjustability and include micro-trim adjuster (US Patent No. 8,388,076)
- Patented mounting straps (US Patent No. 9,756,941)
- TSCA Title VI compliant



448-VC25SC-8
8" Base Height Vanity Organizer
w/ (9) Bins

Tiered Vanity Organizer Pullout w/ BLUM Soft-Close

PRODUCT	DESCRIPTION	DIMS	MCO	CAB	FINISH	SLP
448-VC20SC-8	8" Vanity Organizer w/ (6) Bins	8-7/16" (215 mm) W x 19-9/16" (497 mm) D x 20-3/8" (518 mm) H	8-1/2" (216 mm) - FF 8-1/2" (216 mm) - FL	FHVB12	Wood	$667.99
448-VC25SC-8	8" Base Height Vanity Organizer w/ (9) Bins	8-7/16" (215 mm) W x 19" (483 mm) D x 25-9/16" (650 mm) H	8-1/2" (216 mm) - FF 8-1/2" (216 mm) - FL	FHVB12	Wood	$769.99

NOTE: Polycarbonate Bins = 7" (178 mm) W x 1-3/4" (45 mm) D x 2-1/4" (57 mm) H

SBVDTF-Series

Flexible Vanity Drip Tray

NEW FINISH!

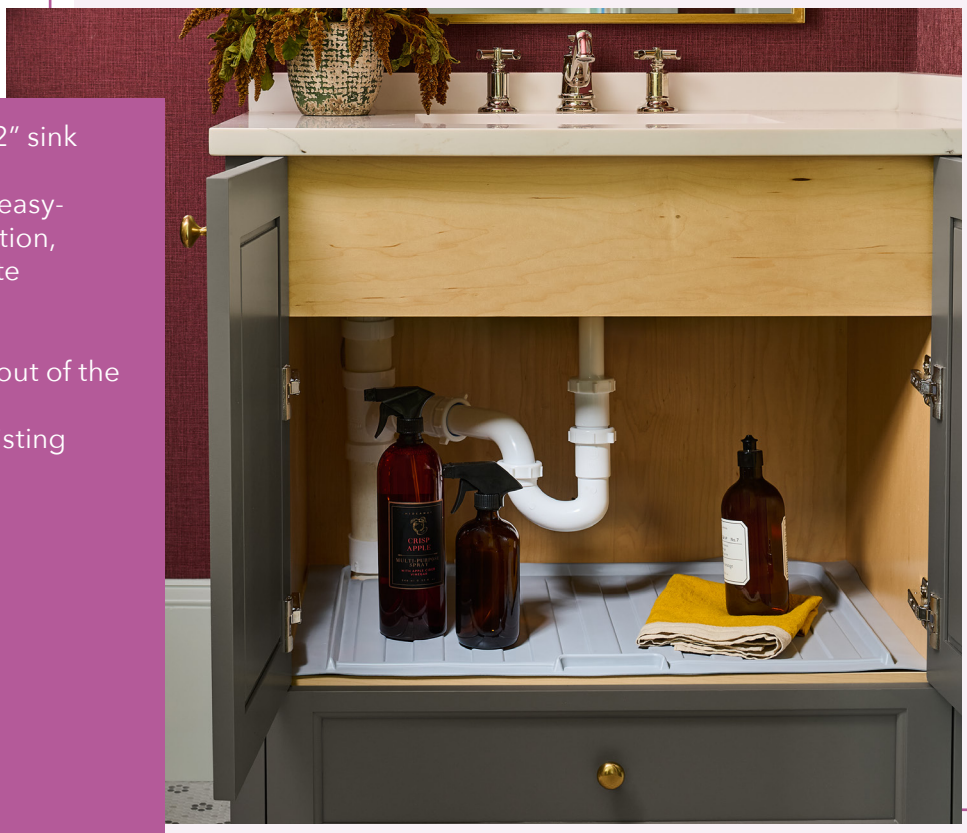

- Designed for 27" to 42" sink base cabinets
- Flexible, durable and easy-to-clean TPE construction, almond, gray and white
- Trimmable
- Drop-in installation
- Funnels excess water out of the front of your cabinet
- Can be installed in existing cabinet construction

SBVDTF-2730-14-1

See sink section (pg. 114) for sink base version



Flexible, durable, and easy-to-clean TPE construction, gray



Funnels excess water out of the front of your cabinet

Flexible Drip Tray

PRODUCT	DESCRIPTION	DIMS	CAB	FINISH	SLP
SBVDTF-2124-11-1	Drip Tray	22-1/2" (572 mm) W x 20-1/4" (515 mm) D x 3/4" (19 mm) H	VSB-24-27	White	$58.99
SBVDTF-2730-11-1	Drip Tray	28-1/2" (724 mm) W x 20-1/4" (515 mm) D x 3/4" (19 mm) H	VSB-27-30	White	$63.99
SBVDTF-3336-11-1	Drip Tray	34-1/2" (876 mm) W x 20-1/4" (515 mm) D x 3/4" (19 mm) H	VSB-33-36	White	$71.99
SBVDTF-2124-14-1	Drip Tray	22-1/2" (572 mm) W x 20-1/4" (515 mm) D x 3/4" (19 mm) H	VSB-24-27	Gray	$58.99
SBVDTF-2730-14-1	Drip Tray	28-1/2" (724 mm) W x 20-1/4" (515 mm) D x 3/4" (19 mm) H	VSB-27-30	Gray	$63.99
SBVDTF-3336-14-1	Drip Tray	34-1/2" (876 mm) W x 20-1/4" (515 mm) D x 3/4" (19 mm) H	VSB-33-36	Gray	$71.99
SBVDTF-2124-15-1	Drip Tray	22-1/2" (572 mm) W x 20-1/4" (515 mm) D x 3/4" (19 mm) H	VSB-24-27	Almond	$58.99
SBVDTF-2730-15-1	Drip Tray	28-1/2" (724 mm) W x 20-1/4" (515 mm) D x 3/4" (19 mm) H	VSB-27-30	Almond	$63.99
SBVDTF-3336-15-1	Drip Tray	34-1/2" (876 mm) W x 20-1/4" (515 mm) D x 3/4" (19 mm) H	VSB-33-36	Almond	$71.99

Vanity Drip Tray

SBVDT Series



SBVDT-3336-11-1

NEW FINISH!

- Designed for installation in new 24" to 36" vanity sink base cabinets
- Glossy polystyrene construction, almond or white
- Drop-in installation
- Protects the bottom of your cabinet from water damage
- Recommended for new construction only



White finish



Almond finish

Tray Capacity	
SBVDT-2124	7/8 qt.
SBVDT-2730	1-1/4 qt.
SBVDT-3336	1-1/2 qt.

See sink section (pg. 115) for sink base version

Vanity Drip Tray

PRODUCT	DESCRIPTION	DIMS	MIN TRIM	FINISH	SLP
SBVDT-2124-A-1	Drip Tray	22-1/2" (572 mm) W x 20-1/4" (515 mm) D x 3/4" (20 mm) H	19-1/2" (495 mm) W x 18-1/2" (470 mm) D	Almond	$58.99
SBVDT-2730-A-1	Drip Tray	28-1/2" (724 mm) W x 20-1/4" (515 mm) D x 3/4" (20 mm) H	25-1/2" (648 mm) W x 18-1/2" (470 mm) D	Almond	$65.99
SBVDT-3336-A-1	Drip Tray	34-1/2" (876 mm) W x 20-1/4" (515 mm) D x 3/4" (20 mm) H	31-1/2" (800 mm) W x 18-1/2" (470 mm) D	Almond	$73.99
SBVDT-2124-11-1	Drip Tray	22-1/2" (572 mm) W x 20-1/4" (515 mm) D x 3/4" (20 mm) H	19-1/2" (495 mm) W x 18-1/2" (470 mm) D	White	$58.99
SBVDT-2730-11-1	Drip Tray	28-1/2" (724 mm) W x 20-1/4" (515 mm) D x 3/4" (20 mm) H	25-1/2" (648 mm) W x 18-1/2" (470 mm) D	White	$65.99
SBVDT-3336-11-1	Drip Tray	34-1/2" (876 mm) W x 20-1/4" (515 mm) D x 3/4" (20 mm) H	31-1/2" (800 mm) W x 18-1/2" (470 mm) D	White	$73.99
(12) Vanity Drip Trays					
SBVDT-2124-A-12	(12) Drip Trays	22-1/2" (572 mm) W x 20-1/4" (515 mm) D x 3/4" (20 mm) H	19-1/2" (495 mm) W x 18-1/2" (470 mm) D	Almond	$53.99 ea.
SBVDT-2730-A-12	(12) Drip Trays	28-1/2" (724 mm) W x 20-1/4" (515 mm) D x 3/4" (20 mm) H	25-1/2" (648 mm) W x 18-1/2" (470 mm) D	Almond	$54.99 ea.
SBVDT-3336-A-12	(12) Drip Trays	34-1/2" (876 mm) W x 20-1/4" (515 mm) D x 3/4" (20 mm) H	31-1/2" (800 mm) W x 18-1/2" (470 mm) D	Almond	$66.99 ea.

5SBWC Series

Sink Base Waste Pullout

- Designed for 24" and larger sink base cabinets
- (1) 8 L and (1) 15 L bin, both with handles
- Full-extension, undermount slides w/ soft-close
- Mounts to cabinet floor
- (1) green lid and (1) white lid
- Door-mounting kit (sold separately)

Scan for video



5SBWC-815S-1

Wire Undersink Waste Pullout

PRODUCT	DESCRIPTION	DIMS	MCO	CAB	FINISH	SLP
5SBWC-815S-1	(1) 8 L and (1) 15 L Bin	8-15/16" (228 mm) W x 18-19/32" (473 mm) D x 14-1/4" (362 mm) H	9" (227 mm)	VSB24+	Silver	$185.99
Accessories						
5WB-DMKIT	Door-Mount Kit				Chrome	$42.99

5SBWCC Series

Sink Base Waste & Cleaning Pullout

- Designed for 24" and larger sink base cabinets
- (1) 8 L with removable rack and (2) 1 L spray bottles
- Full-extension, undermount slides w/ soft-close
- Mounts to cabinet floor
- (1) green lid
- Door-mounting kit (sold separately)

Scan for video



5SBWC-815S-1

Wire Undersink Waste & Cleaning Pullout

PRODUCT	DESCRIPTION	DIMS	MCO	CAB	FINISH	SLP
5SBWCC-8S-1	(1) 8 L and (2) 1 L Bottles	8-15/16" (228 mm) W x 18-19/32" (473 mm) D x 14-1/4" (362 mm) H	9" (227 mm)	VSB24+	Silver	$163.99
Accessories						
5WB-DMKIT	Door-Mount Kit				Chrome	$42.99







CLOSET SOLUTIONS

CONCEAL THE **CHAOS**

The company that has become America's market leader in whole home storage solutions, brings you innovative solutions for your closet that add greater convenience and ease of use.

True to our success story, the closet program has a plethora of superior quality accessories that include hampers, mirrors, ironing boards and hooks, pulls and knobs in numerous finishes and multiple sizes.

PROP 65 WARNING FOR CALIFORNIA RESIDENTS

WARNING: These products can expose you to chemicals such as formaldehyde, lead or styrene, which are known to the State of California to cause cancer and birth defects or other reproductive harm. For more information go to www.P65Warnings.ca.gov

REV-A-SHELF®

CSOHSL Series

Black Hamper Pullout

- Designed for 14" depth closet cabinets
- Available in 18", 24" and 30" section widths
- Full-extension, 75 lb. rated, ball-bearing steel slides
- Removable canvas bag w/ handles
  - 18" and 24" - (1) canvas bag
  - 30" - (2) canvas bags
- Mounts to cabinet sides
- Installs easily in 32 mm applications



CSOHSL-24-1

Scan for video

SIDELINES® by REV-A-SHELF



CSOHSL-24-1
Black Hamper Pullout
(24" version shown)



1.7 BU removable canvas bag w/ handles

Black Hamper Pullout

PRODUCT	DESCRIPTION	DIMS	MCO	FINISH	SLP
CSOHSL-18-1	1.7 BU Hamper	18" (458 mm) W x 14" (356 mm) D x 20-7/8" (531 mm) H	18" (457 mm)	Black	$148.99
CSOHSL-24-1	2.1 BU Hamper	24" (610 mm) W x 14" (356 mm) D x 20-7/8" (531 mm) H	24" (610 mm)	Black	$158.99
CSOHSL-30-1	(2) 1.3 BU Hampers	30" (762 mm) W x 14" (356 mm) D x 20-7/8" (531 mm) H	30" (762 mm)	Black	$181.99

Tilt-Out Hampers

CTO SERIES



CTOHSL-24-1

- Chrome is available in 18" and 24" widths and black cloth is available for 18", 24" and 30" openings
- Heavy gauge 2.8 mm and 5.8 mm steel wire construction
- Available in chrome or black cloth varities
- Unique, slanted rim design for clearance with tilt-out hamper cabinet doors
- Flap stay and door-mounting bracket hardware included



CTOHBSL-FS-1
Flap Stay Mechanism
(Sold Separately)

Scan for video

SIDELINES® by REV-A-SHELF

Tilt-Out Hampers

PRODUCT	DESCRIPTION	DIMS	MCO	FINISH	SLP
CTOHSL-18-1	Cloth Tilt-Out Hamper for 18" Closet	16" (406 mm) W x 13-1/2" (343 mm) D x 19-1/2" (495 mm) H	18" (457 mm)	Black	$130.99
CTOHSL-24-1	Cloth Tilt-Out Hamper for 24" Closet	21" (533 mm) W x 13-1/2" (343 mm) D x 19-1/2" (495 mm) H	24" (610 mm)	Black	$137.99
CTOHSL-30-1	Cloth Tilt-Out Hamper for 30" Closet	27" (686 mm) W x 13-1/2" (343 mm) D x 19-1/2" (495 mm) H	30" (762 mm)	Black	$149.99
Accessories					
CTOHBSL-FS-1	Flap Stay for Tilt-Out Hamper	1-11/16" (43 mm) W x 1-11/16" (43 mm) D x 10-1/2" (267 mm) H		Chrome	$34.99

CB Series

Wire Pullout Basket



CB-182007CR-1 & CB-182011CR-1

- Designed for 14″ depth closet cabinets
- Available in (3) heights: 5″, 10″ or 17″ and (3) widths: 18″, 24″ or 30″
- Installs easily in 32 mm applications
- Easy to remove baskets
- Baskets rest on top of the full-extension slides, eliminating torque twist
- Bayonet mounting system
- Available in chrome

NOTE: * Product available in (1) or (3) packs - 100 lb. weight rated slides.



Close up of bayonet mounting system
for easy removal and re-installation



Our baskets rest upon the slide, to eliminate
the torque-twist associated
with other baskets



See page 256 for basket accessories



CB-181207CR-1
Chrome,
18" wide, 12" deep, 7" height

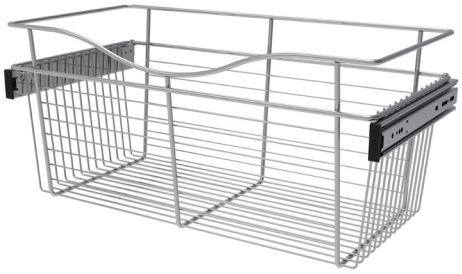

CB-241411CR-1
Chrome,
24" wide, 14" deep, 11" height

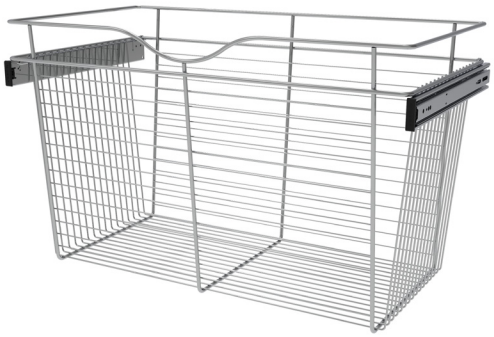

CB-301618CR-1
Chrome,
30" wide, 16" deep, 18" height

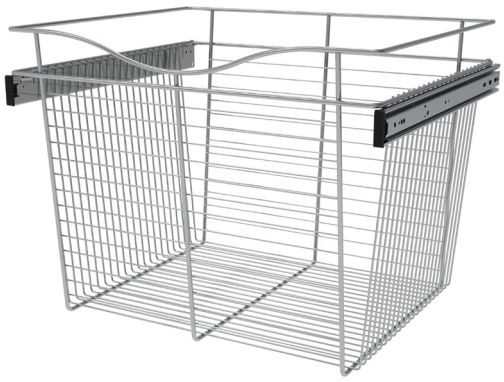

CB-242018CR-1
Chrome,
24" wide, 20" deep, 18" height

Specs on the following page

CB Series

Wire Pullout Basket

NOTE: * Product available in individual (1) or (3) packs - 100 lb. weight rated slides.

PRODUCT	DESCRIPTION	DIMS	FINISH	SLP (3)
Chrome Wire Pullout Baskets—12" Deep Basket				
CB-181207CR-3	Pullout Basket	18" (457 mm) W x 12" (305 mm) D x 7" (178 mm) H	Chrome	$79.99
CB-181211CR-3	Pullout Basket	18" (457 mm) W x 12" (305 mm) D x 11" (280 mm) H	Chrome	$87.99
CB-181218CR-3	Pullout Basket	18" (457 mm) W x 12" (305 mm) D x 18" (457 mm) H	Chrome	$65.99
CB-241207CR-3	Pullout Basket	24" (610 mm) W x 12" (305 mm) D x 7" (178 mm) H	Chrome	$83.99
CB-241211CR-3	Pullout Basket	24" (610 mm) W x 12" (305 mm) D x 11" (280 mm) H	Chrome	$98.99
CB-301218CR-3	Pullout Basket	30" (762 mm) W x 12" (305 mm) D x 18" (457 mm) H	Chrome	$89.75
Chrome Wire Pullout Baskets—14" Deep Basket				
CB-181407CR-3	Pullout Basket	18" (457 mm) W x 14" (356 mm) D x 7" (178 mm) H	Chrome	$80.99
CB-181411CR-3	Pullout Basket	18" (457 mm) W x 14" (356 mm) D x 11" (280 mm) H	Chrome	$92.99
CB-181418CR-3	Pullout Basket	18" (457 mm) W x 14" (356 mm) D x 18" (457 mm) H	Chrome	$113.99
CB-241407CR-3	Pullout Basket	24" (610 mm) W x 14" (356 mm) D x 7" (178 mm) H	Chrome	$90.99
CB-241411CR-3	Pullout Basket	24" (610 mm) W x 14" (356 mm) D x 11" (280 mm) H	Chrome	$108.99
CB-241418CR-3	Pullout Basket	24" (610 mm) W x 14" (356 mm) D x 18" (457 mm) H	Chrome	$130.99
CB-301407CR-3	Pullout Basket	30" (762 mm) W x 14" (356 mm) D x 7" (178 mm) H	Chrome	$101.99
CB-301411CR-3	Pullout Basket	30" (762 mm) W x 14" (356 mm) D x 11" (280 mm) H	Chrome	$114.99
CB-301418CR-3	Pullout Basket	30" (762 mm) W x 14" (356 mm) D x 18" (457 mm) H	Chrome	$145.99
Chrome Wire Pullout Baskets—16" Deep Basket				
CB-181607CR-3	Pullout Basket	18" (457 mm) W x 16" (407 mm) D x 7" (178 mm) H	Chrome	$93.99
CB-181611CR-3	Pullout Basket	18" (457 mm) W x 16" (407 mm) D x 11" (280 mm) H	Chrome	$107.99
CB-181618CR-3	Pullout Basket	18" (457 mm) W x 16" (407 mm) D x 18" (457 mm) H	Chrome	$129.99
CB-241607CR-3	Pullout Basket	24" (610 mm) W x 16" (407 mm) D x 7" (178 mm) H	Chrome	$99.99
CB-241611CR-3	Pullout Basket	24" (610 mm) W x 16" (407 mm) D x 11" (280 mm) H	Chrome	$117.99
CB-241618CR-3	Pullout Basket	24" (610 mm) W x 16" (407 mm) D x 18" (457 mm) H	Chrome	$151.99
CB-301607CR-3	Pullout Basket	30" (762 mm) W x 16" (407 mm) D x 7" (178 mm) H	Chrome	$120.99
CB-301611CR-3	Pullout Basket	30" (762 mm) W x 16" (407 mm) D x 11" (280 mm) H	Chrome	$132.99
CB-301618CR-3	Pullout Basket	30" (762 mm) W x 16" (407 mm) D x 18" (457 mm) H	Chrome	$158.99
Chrome Wire Pullout Baskets—20" Deep Basket				
CB-182007CR-3	Pullout Basket	18" (457 mm) W x 20" (508 mm) D x 7" (178 mm) H	Chrome	$106.99
CB-182011CR-3	Pullout Basket	18" (457 mm) W x 20" (508 mm) D x 11" (280 mm) H	Chrome	$123.99
CB-182018CR-3	Pullout Basket	18" (457 mm) W x 20" (508 mm) D x 18" (457 mm) H	Chrome	$157.99
CB-242007CR-3	Pullout Basket	24" (610 mm) W x 20" (508 mm) D x 7" (178 mm) H	Chrome	$120.99
CB-242011CR-3	Pullout Basket	24" (610 mm) W x 20" (508 mm) D x 11" (280 mm) H	Chrome	$145.99
CB-242018CR-3	Pullout Basket	24" (610 mm) W x 20" (508 mm) D x 18" (457 mm) H	Chrome	$177.99



CB-182007CR-1

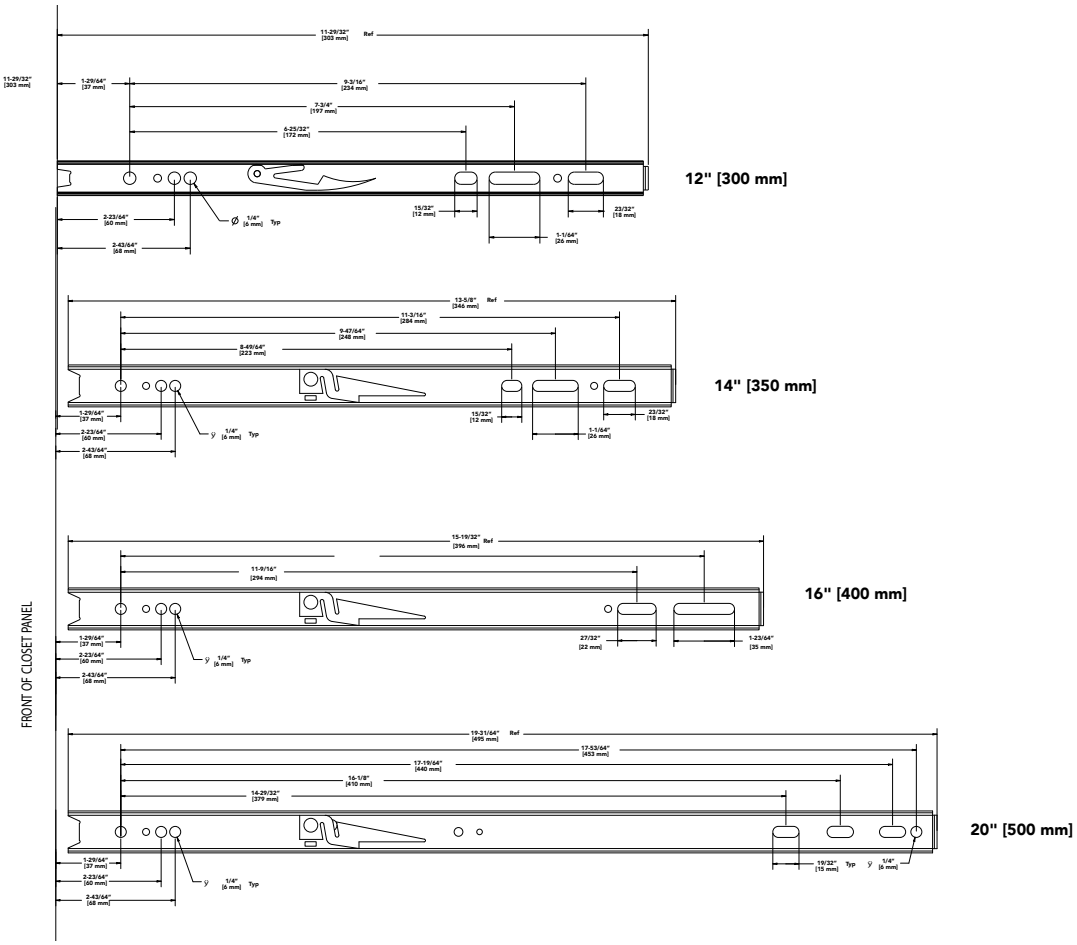

Cloth Hamper for CB Series



CHBI Series

- Designed to fit our CB Series Baskets
  CB-241418**-1/3
  CB-241618**-1/3
  CB-242018**-1/3
  CB-301418**-1/3
  CB-301618**-1/3
  ** Denotes color code
- Machine washable canvas with velcro ties
- Black coated metal handles and clips included

NOTE: * Product available in individual (1) or (3) packs.

Cloth Hamper for CB Basket

PRODUCT	DESCRIPTION	DIMS	FINISH	SLP (1)	SLP (3)
CHBI-241618-*	Cloth Hamper	21-17/32" (547 mm) W x 14-1/4" (362 mm) D x 14-15/32" (368 mm) H	Black	$53.99	$53.99
CHBI-242018-*	Cloth Hamper	21-17/32" (547 mm) W x 18-1/4" (464 mm) D x 14-15/32" (368 mm) H	Black	$82.65	$55.99
CHBI-301618-*	Cloth Hamper	27-3/8" (695 mm) W x 14-1/4" (362 mm) D x 14-15/32" (368 mm) H	Black	$83.40	$61.99

CRSL Series

Closet Rod & Caps

Closet Rods

- Cast aluminum with integrated plastic pole guard
- Available in matte black, chrome or satin nickel
- Matching pole caps (sold separately)

Pole Caps

- Dowel mount: 32 mm closet system flange with 5 mm dowel pins for easy adjustments
- Includes (1) open & (1) closed cap providing stability and enabling you to install them before inserting a closet rod
- Available in matte black, chrome or satin nickel
- Compatible with 1-5/8" diameter closet rod (sold separately)
- Perfect for closets and bathrooms



CRSL-96-MB-1

SIDELINES® by REV-A-SHELF

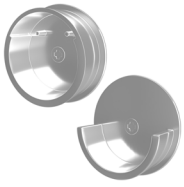

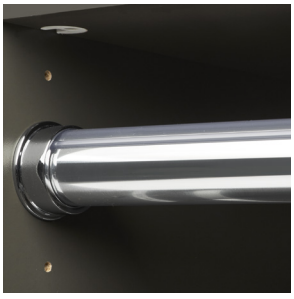



CRCSL-CR-1
Closet Rod Cap
(Chrome finish)

Closet Rod				
PRODUCT	DESCRIPTION	DIMS	FINISH	SLP
CRSL-96-CR-1	Closet Rod	96" (2438 mm) W x 1-15/32" (37 mm) D x 1-1/2" (37 mm) H	Chrome	$149.99
CRSL-96-MB-1	Closet Rod	96" (2438 mm) W x 1-15/32" (37 mm) D x 1-1/2" (37 mm) H	Matte Black	$149.99
CRSL-96-SN-1	Closet Rod	96" (2438 mm) W x 1-15/32" (37 mm) D x 1-1/2" (37 mm) H	Satin Nickel	$149.99
(2) Closet Rod Caps				
CRCSL-CR-1	Closet Rod Caps	11/16" (18 mm) W x 2" (51 mm) D x 2" (51 mm) H	Chrome	$15.99
CRCSL-MB-1	Closet Rod Caps	11/16" (18 mm) W x 2" (51 mm) D x 2" (51 mm) H	Matte Black	$15.99
CRCSL-SN-1	Closet Rod Caps	11/16" (18 mm) W x 2" (51 mm) D x 2" (51 mm) H	Satin Nickel	$15.99

Side-Mount Belt Rack

BRC Series



BRC-14CR

- Available in 12" and 14" depths
- Available in chrome and matte black
- Holds up to (9) belts
- Full-extension, ball-bearing slide



BRC-14MB
14" Matte Black
Belt Rack



BRC-14CR
14" Chrome
Belt Rack

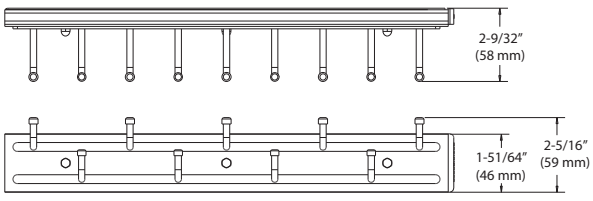

DEPTH	BELTS
12"	7
14"	9

Side Mount Belt Rack

PRODUCT	DESCRIPTION	DIMS	FINISH	SLP
BRC-12CR	12" Belt Rack	2-1/2" (64 mm) W x 12" (305 mm) D x 1-7/8" (48 mm) H	Chrome	$35.99
BRC-12MB	12" Belt Rack	2-1/2" (64 mm) W x 12" (305 mm) D x 1-7/8" (48 mm) H	Matte Black	$33.05
BRC-14CR	14" Belt Rack	2-1/2" (64 mm) W x 14" (356 mm) D x 1-7/8" (48 mm) H	Chrome	$36.99
BRC-14MB	14" Belt Rack	2-1/2" (64 mm) W x 14" (356 mm) D x 1-7/8" (48 mm) H	Matte Black	$31.90

BRC Series

Static Belt Rack

- Available in chrome
- Holds up to (7) belts
- Easy installation



Static Belt Rack

PRODUCT	DESCRIPTION	DIMS	FINISH	SLP
BRC-12NS-CR	Static Belt Rack	1-7/8" (48 mm) W x 11-3/4" (298 mm) D x 1-3/4" (44 mm) H	Chrome	$20.99

TRC Series

Static Tie Rack



Static Tie Rack

PRODUCT	DESCRIPTION	DIMS	FINISH	SLP
TRC-12NS-CR	Static Tie Rack	1-7/8" (48 mm) W x 11-3/4" (299 mm) D x 1-3/4" (45 mm) H	Chrome	$26.99

Side Mount Tie Rack

TRC Series

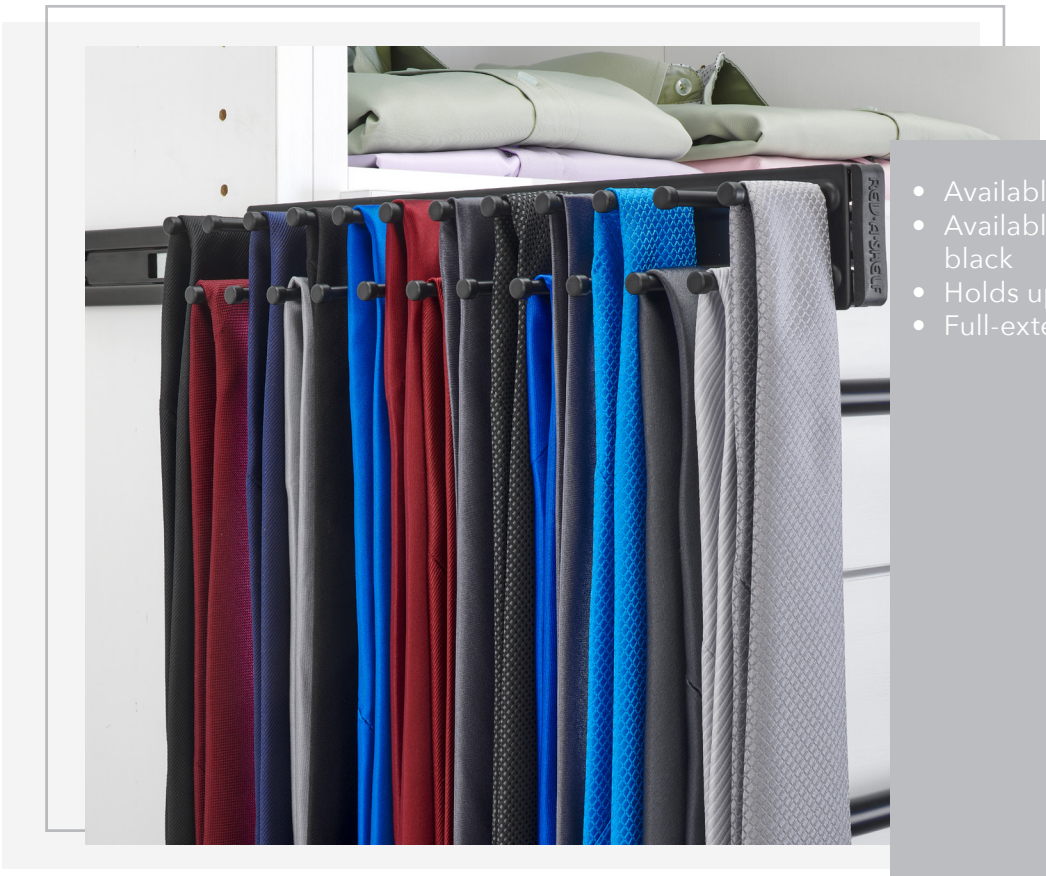

TRC-12MB

- Available in 12" and 14" depths
- Available in chrome and matte black
- Holds up to (25) ties
- Full-extension, ball-bearing slide



TRC-12CR
12" Chrome

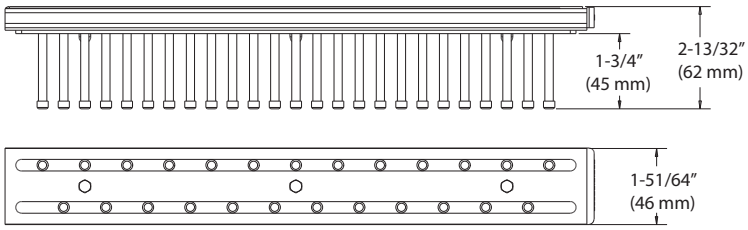

DEPTH	TIES
12"	23
14"	25

Side Mount Tie Rack

PRODUCT	DESCRIPTION	DIMS	FINISH	SLP
12" Side Mount Tie Rack				
TRC-12CR	Tie Rack	2-1/2" (64 mm) W x 12" (305 mm) D x 1-7/8" (48 mm) H	Chrome	$36.99
TRC-12MB	Tie Rack	2-1/2" (64 mm) W x 12" (305 mm) D x 1-7/8" (48 mm) H	Matte Black	$35.99
14" Side Mount Tie Rack				
TRC-14CR	Tie Rack	2-1/2" (64 mm) W x 14" (356 mm) D x 1-7/8" (48 mm) H	Chrome	$39.99
TRC-14MB	Tie Rack	2-1/2" (64 mm) W x 14" (356 mm) D x 1-7/8" (48 mm) H	Matte Black	$38.99

CVL Series

Standard Valet Rod

- Available in chrome and matte black
- Unique removable pull
- Installs easily with only (4) screws
- Mounting bracket

Note: Rod pulls out 6"



CVL-12-CR
Chrome



CVL-12-MB
Matte Black



CVL-12-CR

Standard Valet Rod

PRODUCT	DESCRIPTION	DIMS	FINISH	SLP
CVL-12-CR	Standard Valet Rod	31/32" (25 mm) W x 11-7/8" (302 mm) D x 1-5/8" (41 mm) H	Chrome	$32.99
CVL-12-MB	Standard Valet Rod	31/32" (25 mm) W x 11-7/8" (302 mm) D x 1-5/8" (41 mm) H	Matte Black	$30.99

CVRI Series

Insert Valet Rod

- Ability to open or close the 3-3/4" rod with a single finger
- Removable pull hardware
- Designed to fit within 3/4" and larger closet panels
- Use the drill guide (sold separately) for a perfect fit and stability

Note: Rod pulls out 3-1/2"

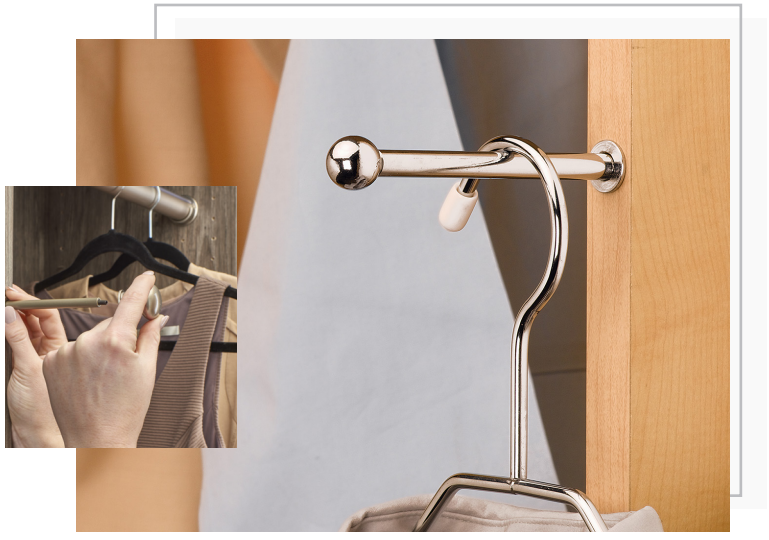

CVRI-7-CR

Closet Valet Rod

PRODUCT	DESCRIPTION	DIMS	FINISH	SLP
CVRI-7-CR	Insert Valet Rod	5/8" (16 mm) W x 7-9/16 - 7-3/8" (95 - 187 mm) D x 5/8" (16 mm) H	Chrome	$28.99
CVRI-DG	Drill Guide w/ Bit	Designed to simplify drilling for the installation of this product, 1/2" drill bit included.		$170.99

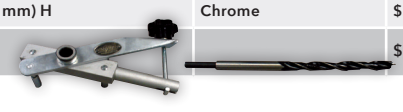

Designer Series Valet Rod

CVR Series

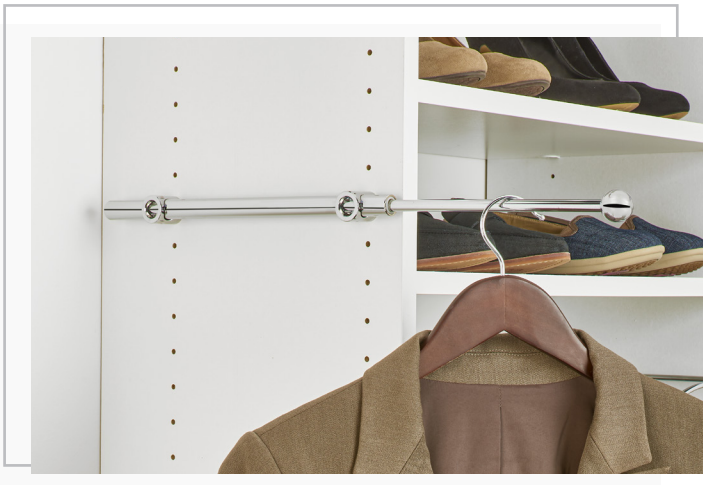

- Available in chrome and matte black
- Adjustable mounting brackets
- Installs easily with only (2) screws
- Unique removable pull
- Patented design
  (US Patent No. D648,141)
  (US Patent No. 8,002,127)

Designer Series Valet Rod

PRODUCT	DESCRIPTION	DIMS	FINISH	SLP
12" Designer Series Valet Rod				
CVR-12-CR	Designer Series Valet Rod	1-1/8" (32 mm) W x 11-13/16 - 18-5/8" (302 - 470 mm) D x 1" (25 mm) H	Chrome	$36.99
CVR-12-MB	Designer Series Valet Rod	1-1/8" (32 mm) W x 11-13/16 - 18-5/8" (302 - 470 mm) D x 1" (25 mm) H	Matte Black	$35.99
14" Designer Series Valet Rod				
CVR-14-CR	Designer Series Valet Rod	1-1/8" (32 mm) W x 13-13/16 - 21-13/16" (352 - 556 mm) D x 1" (25 mm) H	Chrome	$41.99
CVR-14-MB	Designer Series Valet Rod	1-1/8" (32 mm) W x 13-13/16 - 21-13/16" (352 - 556 mm) D x 1" (25 mm) H	Matte Black	$38.99

Adjustable Laundry Valet Rod

CLVSL Series

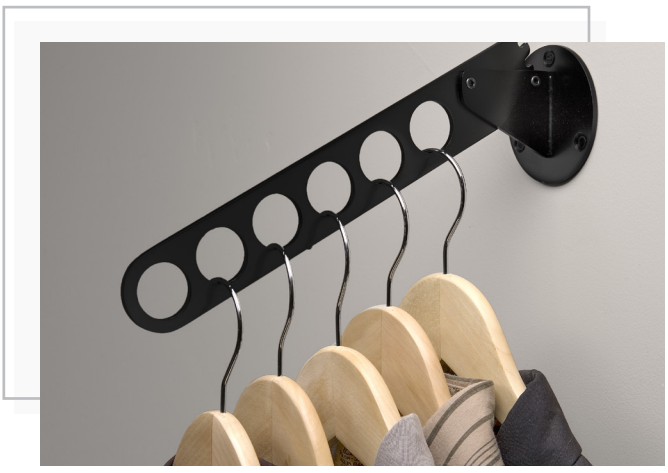

SIDELINES® by REV-A-SHELF

- Steel construction
- Available in matte black, chrome or satin nickel
- Extends out to 11"
- Holds up to 35 lbs.
- Mounting-screws provided

Adjustable Laundry Valet Rod

PRODUCT	DESCRIPTION	DIMS	FINISH	SLP
CLVSL-MB-1	Laundry Valet Rod	2-15/16" (75 mm) W x 10-29/32" (278 mm) D x 2-15/16" (75 mm) H	Matte Black	$52.99
CLVSL-CR-1	Laundry Valet Rod	2-15/16" (75 mm) W x 10-29/32" (278 mm) D x 2-15/16" (75 mm) H	Chrome	$52.99
CLVSL-SN-1	Laundry Valet Rod	2-15/16" (75 mm) W x 10-29/32" (278 mm) D x 2-15/16" (75 mm) H	Satin Nickel	$51.99

PSCSL Series

Pant Rack Pullout

- (3) models to fit 18", 24" and 30" section widths, all 14"+ deep
- (8), (12) or (15) non-slip storage hanger arms
- Available in matte black or satin nickel
- Full-extension, ball-bearing w/ soft-close
- Steel construction, cast aluminum slide housing
- Installs with (4) screws, a fully-assembled unit

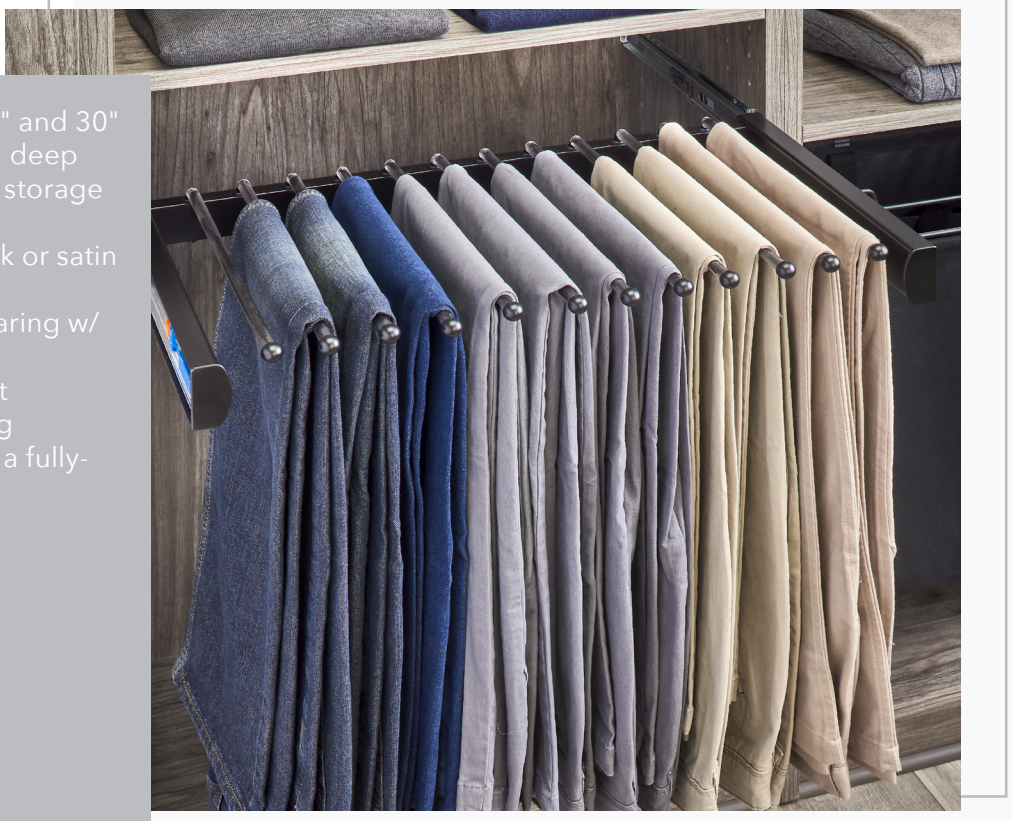

PSCSL-2414SC-MB-1

SIDELINES® by REV-A-SHELF

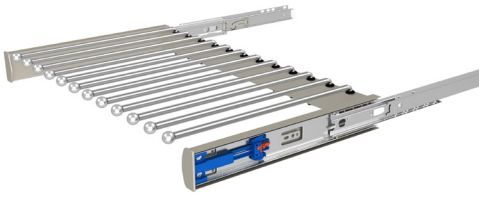

PSCSL-2414SC-SN-1
(13) Pant Capacity

Soft-Close Pant Rack Pullout

PRODUCT	DESCRIPTION	DIMS	FINISH	SLP
PSCSL-1814SC-MB-1	18" W Pant Rack Pullout	18" (457 mm) W x 14" (356 mm) D x 2-1/2" (64 mm) H	Matte Black	$283.99
PSCSL-2414SC-MB-1	24" W Pant Rack Pullout	24" (610 mm) W x 14" (356 mm) D x 2-1/2" (64 mm) H	Matte Black	$290.99
PSCSL-3014SC-MB-1	30" W Pant Rack Pullout	30" (762 mm) W x 14" (356 mm) D x 2-1/2" (64 mm) H	Matte Black	$345.99
PSCSL-1814SC-SN-1	18" W Pant Rack Pullout	18" (457 mm) W x 14" (356 mm) D x 2-1/2" (64 mm) H	Satin Nickel	$286.99
PSCSL-2414SC-SN-1	24" W Pant Rack Pullout	24" (610 mm) W x 14" (356 mm) D x 2-1/2" (64 mm) H	Satin Nickel	$296.99
PSCSL-3014SC-SN-1	30" W Pant Rack Pullout	30" (762 mm) W x 14" (356 mm) D x 2-1/2" (64 mm) H	Satin Nickel	$353.99

Pant Rack Pullout

PSC Series

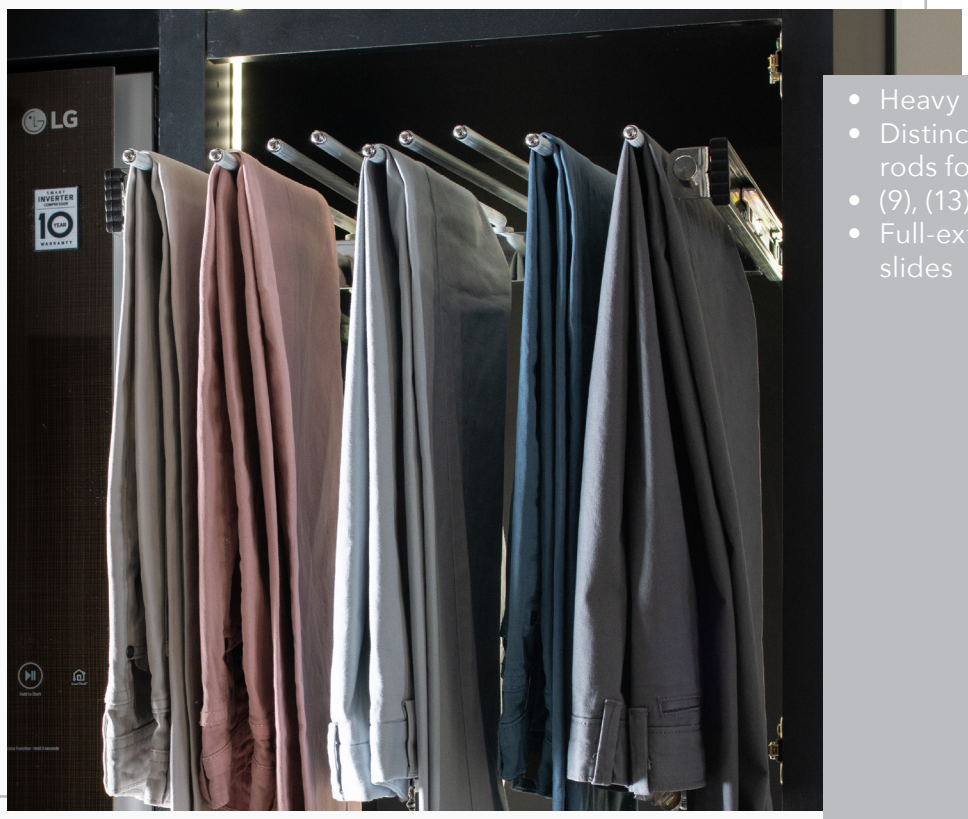

PSC-1814CR

- Heavy gauge chrome frame
- Distinctive movable rods for easy access
- (9), (13) or (16) chrome rods
- Full-extension, ball-bearing slides



Non-slip covering



PSC-1814CR
(9) Pant Capacity



PSC-2414CR
(13) Pant Capacity

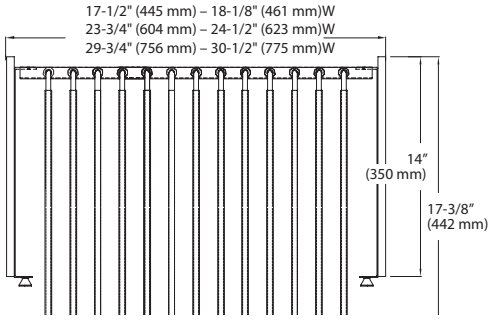

Wire Pants Rack Pullouts

PRODUCT	DESCRIPTION	DIMS	FINISH	SLP
PSC-1814CR	Pants Rack–9 capacity	17-1/2 - 18-1/8" (444 - 460 mm) W x 14" (356 mm) D x 3" (76 mm) H	Chrome	$218.99
PSC-2414CR	Pants Rack–13 capacity	23-3/4 - 24-1/2" (603 - 622 mm) W x 14" (356 mm) D x 3" (76 mm) H	Chrome	$224.99
PSC-3014CR	Pants Rack–16 capacity	29-3/4 - 30-1/2" (756 - 775 mm) W x 14" (356 mm) D x 3" (76 mm) H	Chrome	$230.99

CSR Series

Wire Shoe Rail

- Available lengths: 17", 23", 29" and 35"
- 2-1/4" height
- Available in chrome
- Installs easily in 32 mm applications
- Heavy gauge wire



CSR-23CR-10

NOTE: Designed to fit 5 mm mounting holes on 32 mm spacing

(10) Wire Shoe Rails

PRODUCT	DESCRIPTION	DIMS	FINISH	SLP
CSR-17CR-10	17" Wire Shoe Rail	17" (432 mm) W x 7/16" (432 mm) D x 2-1/4" (57 mm) H	Chrome	$9.99 ea.
CSR-23CR-10	23" Wire Shoe Rail	23" (584 mm) W x 7/16" (584 mm) D x 2-1/4" (57 mm) H	Chrome	$11.99 ea.
CSR-29CR-10	29" Wire Shoe Rail	29" (737 mm) W x 7/16" (737 mm) D x 2-1/4" (57 mm) H	Chrome	$14.99 ea.
CSR-35CR-10	35" Wire Shoe Rail	35" (889 mm) W x 7/16" (889 mm) D x 2-1/4" (57 mm) H	Chrome	$17.99 ea.

CSRSL Series

Shoe Rail

- Available lengths: 18", 24", 30", 36"
- 2" height
- Configured for shelf slide application
- Available in matte black or satin nickel
- Installs easily in 32 mm applications

SIDELINES® by REV-A-SHELF



CSRSL-24SN-10

Satin Nickel Matte Black

(10) Shoe Rails

PRODUCT	DESCRIPTION	DIMS	FINISH	SLP (10)
CSRSL-18MB-10	18" Shoe Rail	17" (432 mm) W x 7/16" (12 mm) D x 2" (51 mm) H	Matte Black	$19.99 ea.
CSRSL-24MB-10	24" Shoe Rail	23" (584 mm) W x 7/16" (12 mm) D x 2" (51 mm) H	Matte Black	$21.99 ea.
CSRSL-30MB-10	30" Shoe Rail	29" (737 mm) W x 7/16" (12 mm) D x 2" (51 mm) H	Matte Black	$28.99 ea.
CSRSL-36MB-10	36" Shoe Rail	35" (889 mm) W x 7/16" (12 mm) D x 2" (51 mm) H	Matte Black	$33.99 ea.
CSRSL-18SN-10	18" Shoe Rail	17" (432 mm) W x 7/16" (12 mm) D x 2" (51 mm) H	Satin Nickel	$19.99 ea.
CSRSL-24SN-10	24" Shoe Rail	23" (584 mm) W x 7/16" (12 mm) D x 2" (51 mm) H	Satin Nickel	$21.99 ea.
CSRSL-30SN-10	30" Shoe Rail	29" (737 mm) W x 7/16" (12 mm) D x 2" (51 mm) H	Satin Nickel	$28.99 ea.
CSRSL-36SN-10	36" Shoe Rail	35" (889 mm) W x 7/16" (12 mm) D x 2" (51 mm) H	Satin Nickel	$33.99 ea.

Closet Mirrors

CMSL/CMTWSL Series



- (2) design configurations:
  - Premier
  - 3-Way Foldable
- Premier mirror is available in (2) heights, 24" and 48"
- 3-Way Foldable mirror has (3) panels that open up to 26" W and is 48" H
- Pulls out smoothly and swivels 90 degrees
- Allow 5-3/4" for swiveling clearance
- Soft-close retracting mechanism, requires only a gentle push
- Fits any partition at least 14" deep and 8" wide
- Can be installed behind cabinet doors
- Universal, non-handed

CMTWSL-1448-SM-1



CMSL-1424-SM-1
24" Closet Mirror
(Silver mist finish shown)



Swivels 90°

SIDELINES® by REV-A-SHELF

Scan for video

Soft-Close Closet Mirrors w/ Over-travel

PRODUCT	DESCRIPTION	DIMS	FINISH	SLP
CMSL-1448-SM-1	48" Closet Mirror	2" (51 mm) W x 13-3/4" (330 mm) D x 47-1/4" (1219 mm) H	Silver Mist	$470.99
CMSL-1424-SM-1	24" Closet Mirror	2" (51 mm) W x 13-3/4" (330 mm) D x 23-5/8" (610 mm) H	Silver Mist	$391.99
3-Way Soft-Close Closet Mirror w/ Over Travel				
CMTWSL-1448-SM-1	48" 3-Way Closet Mirror	3-3/16" (81 mm) W x 13-7/8" (343 mm) D x 47-1/4" (1200 mm) H	Silver Mist	$1029.99

CPUIBSL Series

Premier Pop-Up Ironing Board



- Fits any partition at least 14" deep and 10" wide
- 6" wide when stored, including hardware
- Over-travel slides
- Soft-open assist
- Metal legs lock for stability
- Adjustable feet
- Board is 43" long, 13" wide
- Reversible mounting
- Replacement cover (sold separately)

CPUIBSL-14-SM-1

Scan for video

SIDELINES® by REV-A-SHELF

rev-a-shelf.com | 800-626-1126 | info@rev-a-shelf.com

REV-A-SHELF®



Pull Out



Swivel



Pop-Up



CPUIBSL-14-SM-1
Premier Pop-Up Ironing Board

Premier (Pop-Up)

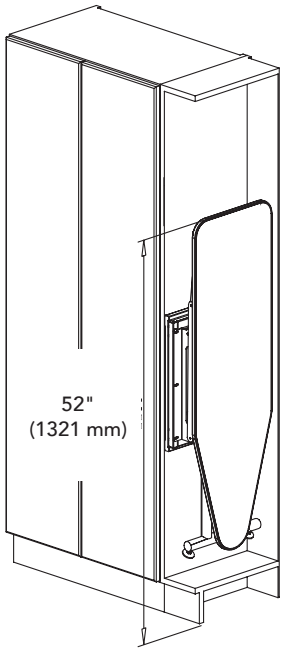

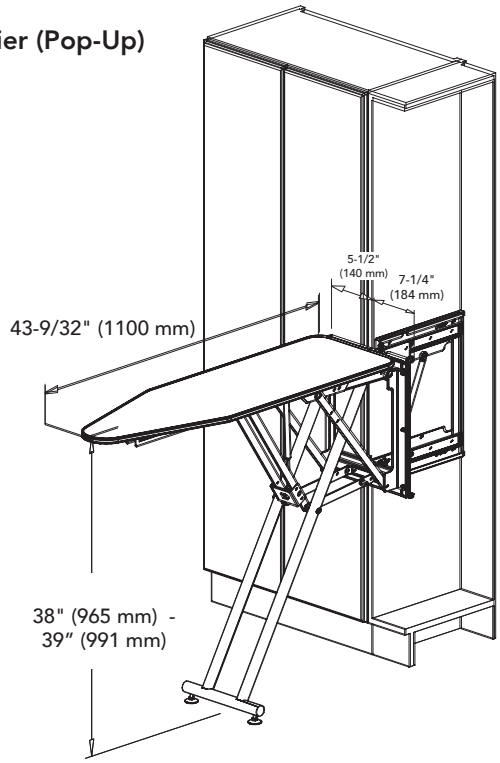

Soft-Close Premier Pop-Up Ironing Board w/ Over-Travel

PRODUCT	DESCRIPTION	DIMS	FINISH	SLP
CPUIBSL-14-SM-1	Premier Pop-Up Ironing Board	6-9/32" (160 mm) W x 13-7/16" (342 mm) D x 43-9/32" (1100 mm) H	Silver Mist	$868.55
Canvas Ironing Board Covers				
CPUIBSL-COVER-52	Cover for Premier Pop-Up Ironing Board	13-3/8" (340 mm) W x 43-11/16" (1110 mm) D x 27/32" (22 mm) H	Tan	$64.99

CROIBSL Series

Elite Rotating Ironing Board



NEW FINISH!

- Fits any partition at least 14" deep
- 18-1/2" wide when stored
- Available in silver mist and matte black
- Mounts on shelf
- Rotates 360-degrees when out of cabinet
- Locks into place
- Soft-close over-travel
- Board is 38" long, 13" wide
- Spacer kit for for drawer mounting included

CROIBSL-14-SM-1

Scan for video

SIDELINES® by REV-A-SHELF



Pull out



Rotate



Open



Swivel 360°



CROIBSL-14-MB-1
Elite Rotating Ironing Board, Matte Black





Elite rotating ironing board can rotate 360° with built-in stops

Elite (Rotating)

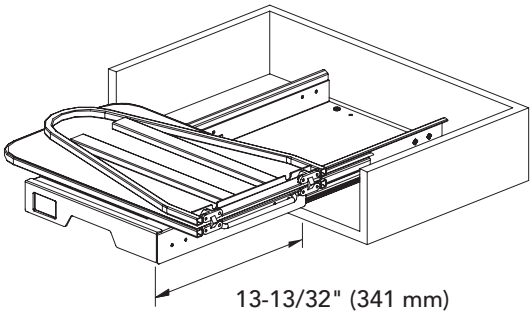

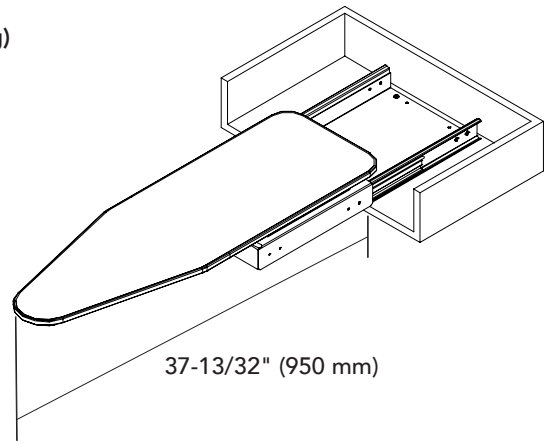







Perfect for installation behind a drawer front with ETH and now cup hinges, using the included spacers

Soft-Close Elite Rotating Ironing Board w/ Over-Travel				
PRODUCT	DESCRIPTION	DIMS	FINISH	SLP
CROIBSL-14-SM-1	Elite Rotating Ironing Board	18-11/16" (475 mm) W x 14" (356 mm) D x 4-17/32" (114 mm) H	Silver Mist	$590.99
CROIBSL-14-MB-1	Elite Rotating Ironing Board	18-11/16" (475 mm) W x 14" (356 mm) D x 4-17/32" (114 mm) H	Matte Black	$590.99
Canvas Ironing Board Covers				
CROIBSL-COVER-52	Cover for Elite Rotating Ironing Board	12-3/16" (310 mm) W x 37-13/16" (960 mm) D x 7/8" (22 mm) H	Tan	$54.99

CSWIBSL Series

Deluxe Swivel Ironing Board



CSWIBSL-14-SM-1

- Fits any partition at least 14" deep and 10" wide
- Board: 38" long, 13" wide
- 5" wide when stored, including hardware
- Overall height when stored: 72"
- Adjustable feet for stability
- Replacement cover (sold separately)

Scan for video

SIDELINES® by REV-A-SHELF



Pull Out



Swivel



Pull Down



CSWIBSL-14-SM-1
Deluxe Swivel Ironing Board

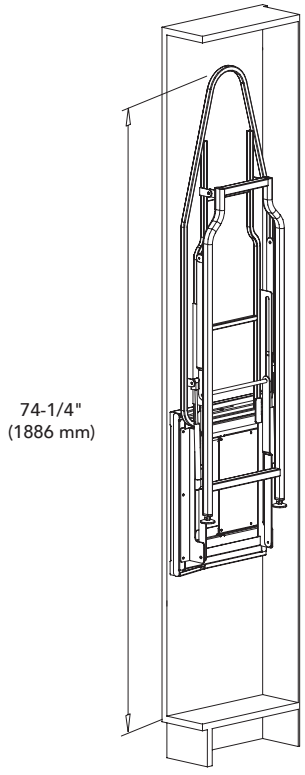

Deluxe (Swivel)

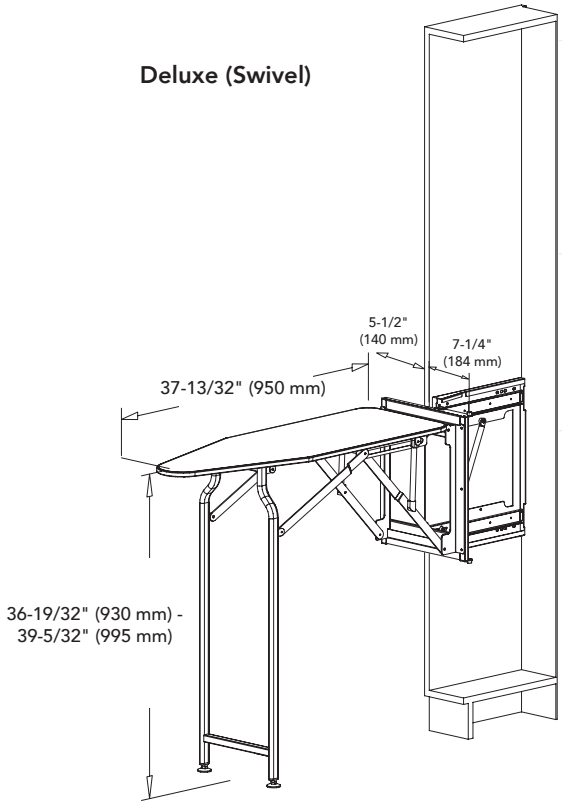

Soft-Close Deluxe Swivel Ironing Board w/ Over-Travel				
PRODUCT	DESCRIPTION	DIMS	FINISH	SLP
CSWIBSL-14-SM-1	Deluxe Swivel Ironing Board	5-1/4" (133 mm) W x 13" (330 mm) D x 53-1/8" (1350 mm) H	Silver Mist	$641.99
Canvas Ironing Board Covers				
CSWIBSL-COVER-52	Cover for Deluxe Swivel Ironing Board	13-3/8" (340 mm) W x 37-3/8" (950 mm) D x 27/32" (22 mm) H	Tan	$57.99

CIB Series

Pullout Ironing Board



CIB-16CR

- Designed for 14-1/2" to 21" vanity cabinet drawer openings
- Complete drawer system, just add your drawer front
- Chrome-plated metal frame
- Over-extension, ball-bearing slides
- Mounts to cabinet front, side and rear wall
- Built-in ironing board

SURFACE AREA

VIB-20CR (Vanity Cabinet)		CIB-16CR (Closet Model)	
WIDTH	LENGTH	WIDTH	LENGTH
11.8" 300 mm	37.7" 957 mm	11.8" 300 mm	29.2" 742 mm

See page 255 for Vanity version

rev-a-shelf.com | 800-626-1126 | info@rev-a-shelf.com

REV-A-SHELF



Perfect application to do quick touch-up ironing before work or a night on the town



Solid surface counter overlays
CANNOT exceed 1-1/4"

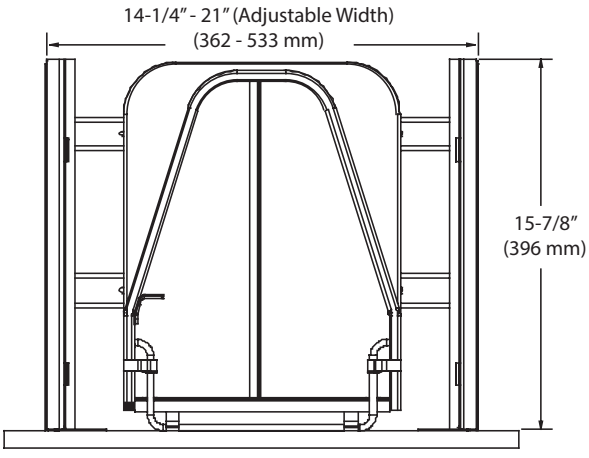

Height = 4" (102 mm)
MIN OPENING: Height = 3-21/32" (93 mm)

Closet Model (CIB-16CR)

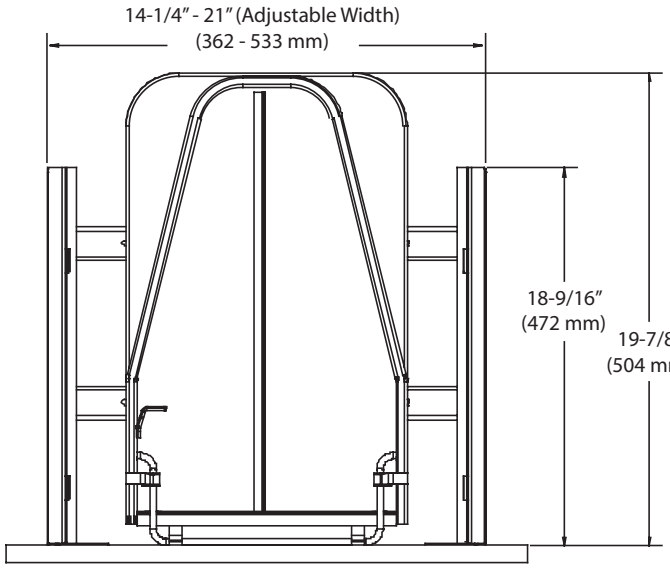

Height = 4" (102 mm)
MIN OPENING: Height = 3-21/32" (93 mm)

Bathroom/Laundry Model (VIB-20CR)



CIB-16CR
Closet Pullout Ironing Board



RAS-CIB-COVER-R-52
Replacement Cover (Closet)



VIB-20CR
Vanity Pullout Ironing Board



RAS-VIB-COVER-52
Replacement Cover (Vanity)

NOTE: Not compatible with inset cabinetry

Pullout Ironing Board

PRODUCT	DESCRIPTION	DIMS	FINISH	SLP
CIB-16CR	Closet Pullout Ironing Board	See drawings for detailed specifications.	Chrome	$298.99
RAS-CIB-COVER-R-52	Replacement Cover (Closet)		Silver	$30.99
VIB-20CR	Vanity Pullout Ironing Board	See drawings for detailed specifications.	Chrome	$375.99
RAS-VIB-COVER-52	Replacement Cover (Vanity)		Silver	$30.99

4WH Series

Bottom Mount Wood Hamper

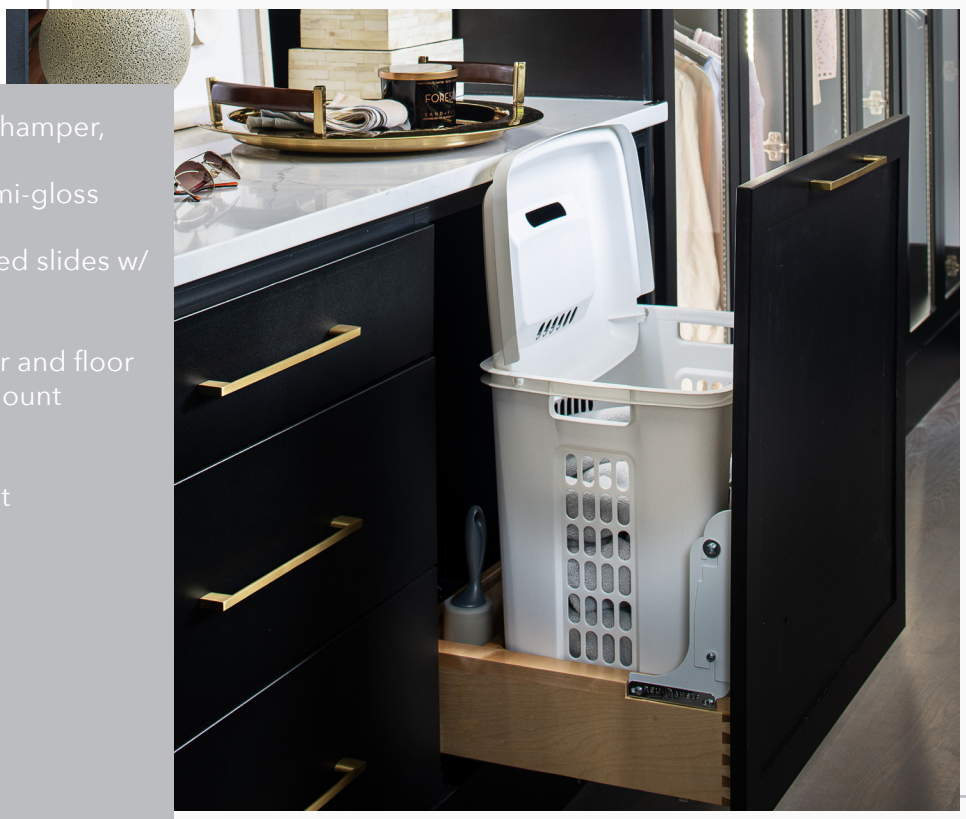

- Single 1.5 BU polymer hamper, white
- Maple frame with a semi-gloss finish
- Full-extension concealed slides w/ BLUM soft-close
- Rear storage
- Mounts to cabinet door and floor
- Pre-assembled door-mount brackets
- (1) matching lid
- TSCA Title VI compliant

*Replacement lid Part No: SP-HPB-LID

Scan for video

1.5 BU Bottom Mount Hamper Pullout w/ BLUM Soft-Close

PRODUCT	DESCRIPTION	DIMS	MCO	CAB	FINISH	SLP
4WH-VCSC-21DM-1	Hamper Pullout	20-5/16" (516 mm) W x 18-11/16" (475 mm) D x 21-1/4" (540 mm) H	21" (533 mm)	VB24	Maple	$499.99
Accessories						
HPB-03323-52	Replacement Hamper	14" (356 mm) W x 18-5/8" (473 mm) D x 18-1/4" (464 mm) H			Polymer	$49.99

Wire Bottom Mount Polymer Hamper

HPRV Series



- Features a shallow 14" depth for closet applications
- Full-extension, ball-bearing slides
- 1.7 BU capacity
- Installs with just (4) screws
- Includes removable lid
- Available with or without door-mount bracket kit

*Replacement lid Part No: SP-HPB-LID

Wire Bottom Mount Polymer Hamper Pullout

PRODUCT	DESCRIPTION	DIMS	FINISH	SLP
HPRV-1925 S	1.7 BU Hamper	19-7/8" (505 mm) W x 14" (356 mm) D x 24" (610 mm) H	Polymer	$193.99
HPRV-1925DM S	Door Mount 1.7 BU Hamper	19-7/8" (505 mm) W x 14" (356 mm) D x 24" (610 mm) H	Polymer	$206.99

CH Series

Aluminum Bottom Mount Wire Hamper

REV-A-MOTION SOFT OPEN SOFT CLOSE
US PATENT NO: 8,091,971

- Designed for 24" base height vanity cabinets
- Double 1.2 BU wire hampers, with (2) canvas liners, machine washable
- Anodized aluminum frame, metallic silver
- Full-extension with 1-1/2" over-travel, ball-bearing slides w/ Rev-A-Motion® soft-open/soft-close (US Patent No. 8,091,971)
- Mounts to cabinet door and floor
- Patented door-mount brackets with 5" of adjustability (US Patent No. 8,939,526)
- Patented design (US Patent No. 9,049,930)



CH-241419-RM-217

Scan for video



Soft-Close Piston



CH-241419-RM-217
Double 1.2 BU Hampers w/ (2) Liners and Silver Base

Aluminum Bottom Mount Wire Hamper w/ Rev-A-Motion®

PRODUCT	DESCRIPTION	DIMS	MCO	CAB	FINISH	SLP
CH-241419-RM-217	Double 1.2 BU Hampers w/ Silver Base	24" (610 mm) W x 13-15/16" (355 mm) D x 18-7/8" (480 mm) H	24" (610 mm)	VB27	Silver/Tan	$733.99
Accessories						
5CHB-Liner	(1) Replacement Canvas Liner				Tan	$32.99

Acrylic Shelf Dividers

CSPD Series

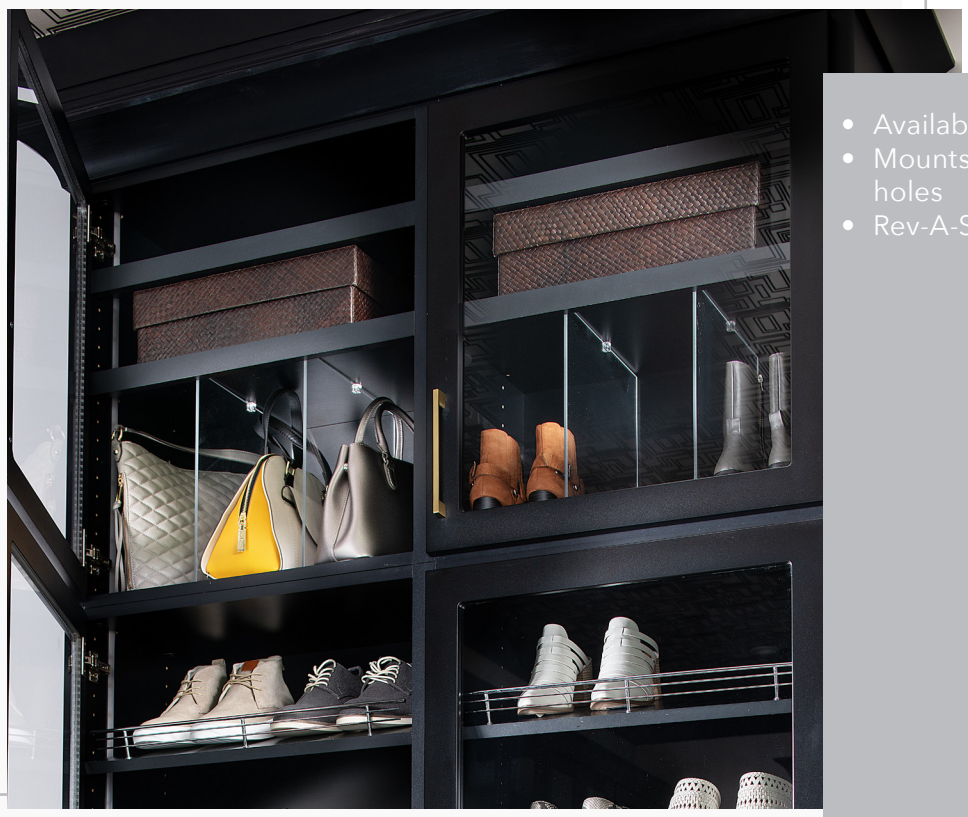

- Available in (2) sizes
- Mounts utilizing 32 mm system holes
- Rev-A-Shelf® exclusive design

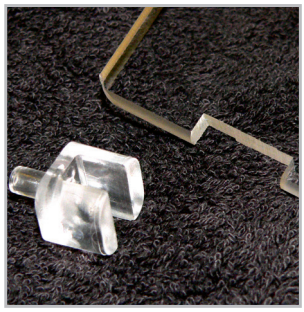

Clips are inserted into notches cut into the acrylic to hold dividers secure



Acrylic dividers can be used in many different ways

(10) Acrylic Dividers w/ (40) Clips

PRODUCT	DESCRIPTION	DIMS	FINISH	SLP
CSPD-6	6" Clear Shoe/Purse Organizer	13-1/2" (342 mm) D x 6-9/16" (167 mm) H x 1/4" (6.4 mm) Thick	Acrylic	$14.99 ea.
CSPD-14	14" Clear Shoe/Purse Organizer	13-1/2" (342 mm) D x 14-1/8" (359 mm) H x 1/4" (6.4 mm) Thick	Acrylic	$31.99 ea.

CPDR Series

Pulldown Closet Rod

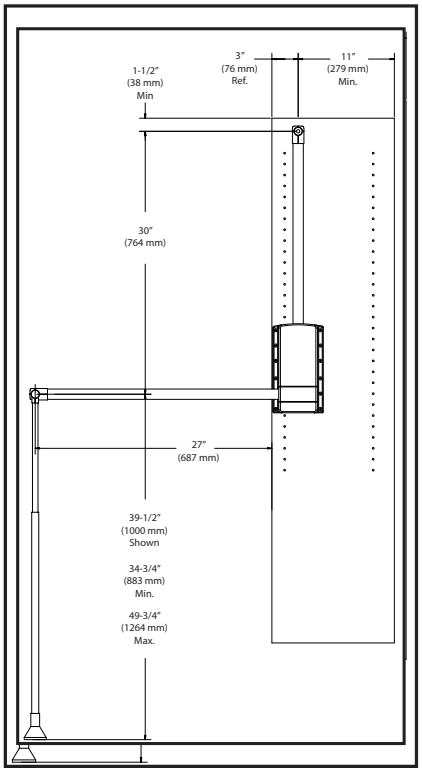



CPDR-2635ORB

- Available in (3) sizes
- Telescoping pull-rod, adjustable from 34" (864 mm) to 50" (1270 mm)
- Mounts to cabinet side
- Rev-A-Shelf® exclusive design
- 25 lb. weight capacity



Reinforce your CPDR with our included heavy-duty bumper



REV-A-SHELF® EXCLUSIVE! Push button mechanism for adjusting handle length



CPDR-1826
21-1/2"- 26" Closet Rod



CPDR-3548
35"- 48" Closet Rod

Pulldown Closet Rod

PRODUCT	DESCRIPTION	DIMS	FINISH	SLP
CPDR-1826	Closet Rod	21-1/2" - 26" (547 - 661 mm) W x 4" (102 mm) D x 34-3/4 - 49-3/4" (883 mm - 1264 mm) H	Chrome/ Black	$236.99
CPDR-2635	Closet Rod	26" - 35" (661 - 889 mm) W x 4" (102 mm) D x 34-3/4 - 49-3/4" (883 mm - 1264 mm) H	Chrome/ Black	$240.99
CPDR-3548	Closet Rod	35" - 48" (889 - 1220 mm) W x 4" (102 mm) D x 34-3/4 - 49-3/4" (883 mm - 1264 mm) H	Chrome/ Black	$246.99

Premier Satin Chrome Pulldown Closet Rod

CPDRSL Series



CPDRSL-48SC

- Cut-to-size fits cabinet openings from 18" (457 mm) to 48" (1219 mm)
- Hanging area of 16.9" (429 mm) to 46.9" (1192 mm)
- Available in matte black and satin chrome
- Swivel handle
- Soft-open/soft-close assist
- 33 lb. capacity
- Mounts to cabinet sides
- Sidelines by Rev-A-Shelf® exclusive design



Can be cut-to-size to fit various cabinet openings

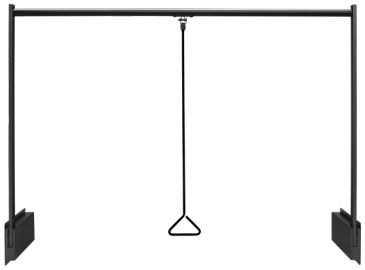

CPDRSL-48MB
18"- 48" Closet Rod, Matte Black



Durable mechanism housing constructed of steel

Scan for video

	CLOSET ROD CUT LENGTH
LB-18	16-29/32" (429 mm)
LB-24	22-29/32" (582 mm)
LB-30	28-29/32" (735 mm)
LB-36	34-29/32" (888 mm)
LB-42	40-29/32" (1040 mm)
LB-48	46-29/32" (1192 mm)

Premier Satin Chrome Pulldown Closet Rod

PRODUCT	DESCRIPTION	DIMS	MCO	FINISH	SLP
CPDRSL-48SC	Premier Closet Pulldown	18 - 48" (458 - 1220 mm) W x 12-13/32" (315 mm) D x 35-7/16" (900 mm) H	37-1/2" (953 mm)	Satin Chrome	$652.99
CPDRSL-48MB	Premier Closet Pulldown	18 - 48" (458 - 1220 mm) W x 12-13/32" (315 mm) D x 35-7/16" (900 mm) H	37-1/2" (953 mm)	Matte Black	$650.99

CJD Series

Jewelry Drawer Inserts

CJD-2414 Jewelry Drawer dimensions.

Inside Height = 1-13/32" (36 mm)
Overall Height = 1-13/16" (46 mm)

- Easy drop-in installation
- CJD-IS and CJD-IN feature easy a soft, velvet-flocked covering
- Rev-A-Shelf® exclusive design
- TSCA Title VI compliant

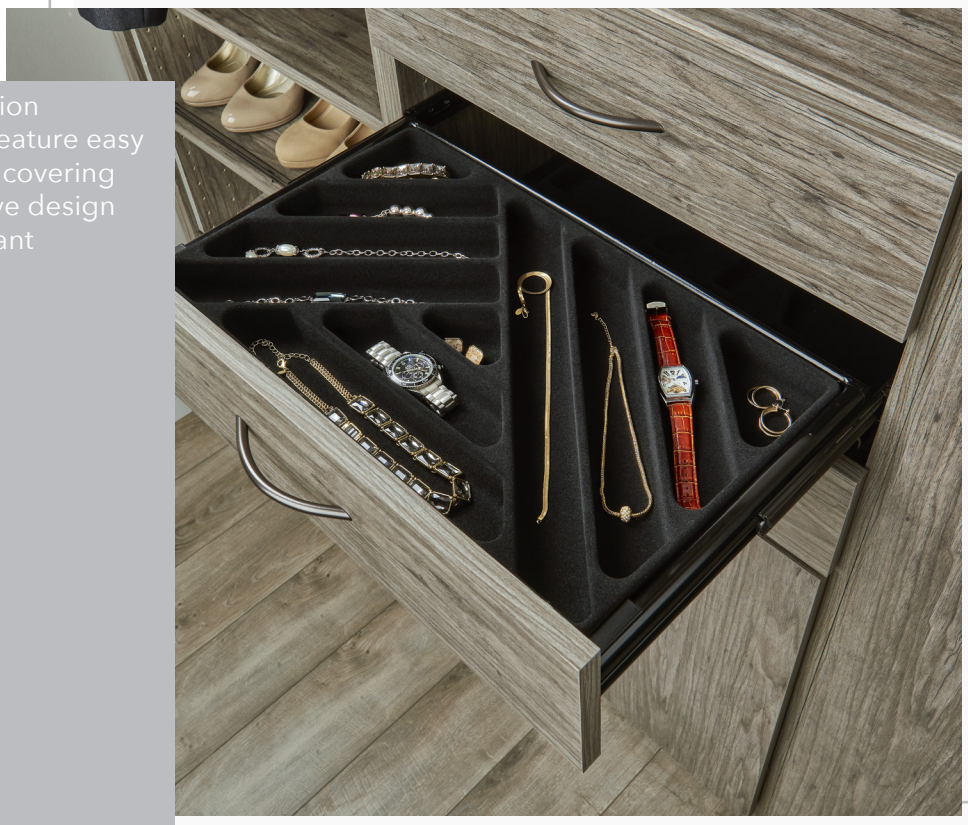

Shown drawer front mounted with a single drawer and necklace insert

CJD-2414



CJD-24IN
Necklace Insert



CJD-24IS
Jewelry Insert

Jewelry Drawer Inserts (NOTE: will not fit in CVJD Series Jewelry Drawer) (Bulk Pack)

PRODUCT	DESCRIPTION	DIMS	FINISH	SLP
CJD-24IS	(2) Jewelry Insert	22" (559 mm) W x 13" (331 mm) D x 1-1/2" (39 mm) H	Velvet	$77.99 ea.
CJD-24IN	(2) Necklace Insert	22" (559 mm) W x 13" (331 mm) D x 1-1/2" (39 mm) H	Velvet	$80.99 ea.
(5) Drawer Front Mounting Bracket Pairs (Bulk Pack)				
CJD-DMB-KIT	Drawer Front Mount Bracket		Black	$6.99 ea.

NOTE: The CJD Jewelry Drawer utilizes 14" black ball-bearing slides

Undermount Jewelry Drawer

CVJD Series

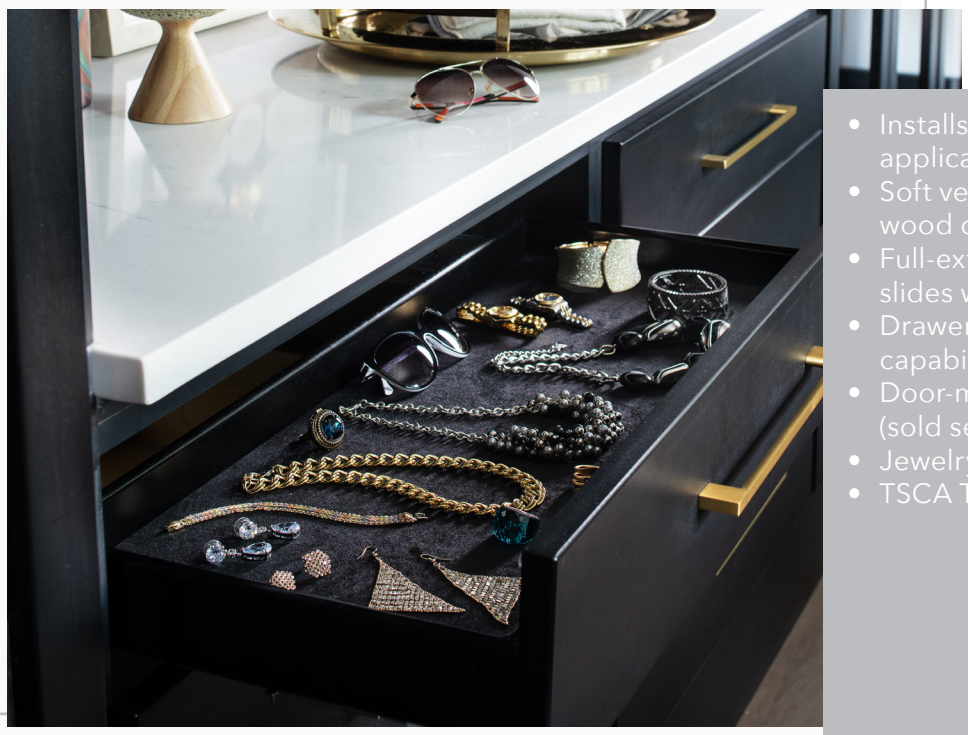

CVJD-3014UM-1

- Installs easily in 32 mm applications
- Soft velvet covering and sturdy wood construction
- Full-extension, ball-bearing slides w/ soft-close
- Drawer-front mounting capability
- Door-mount brackets (sold separately)
- Jewelry inserts (sold separately)
- TSCA Title VI compliant



Jewelry inserts (sold separately) for rings, bracelets and necklaces



CVJD-3014UM-1
30" Undermount Jewelry Drawer

Undermount Jewelry Drawer				
PRODUCT	**DESCRIPTION**	**DIMS**	**FINISH**	**SLP**
Under Mount Jewelry Drawer (Individual Pack)				
CVJD-1814UM-1	Undermount Jewelry Drawer	18" (458 mm) W x 14" (356 mm) D x 3-1/8" (80 mm) H	Black	$227.99
CVJD-2414UM-1	Undermount Jewelry Drawer	24" (610 mm) W x 14" (356 mm) D x 3-1/8" (80 mm) H	Black	$267.99
CVJD-3014UM-1	Undermount Jewelry Drawer	30" (762 mm) W x 14" (356 mm) D x 3-1/8" (80 mm) H	Black	$286.99
Jewelry Drawer Inserts (Individual Pack)				
CV-RING-1	Velvet Ring Organizer	11-5/8" (296 mm) W x 4-1/4" (108 mm) D x 1-1/4" (32 mm) H	Black	$50.99
CA-SMORG-1	Watch/Bracelet Organizer	11-5/8" (296 mm) W x 4-1/4" (108 mm) D x 1-1/4" (32 mm) H	Clear	$97.99
CA-LGORG-1	Earring Organizer	11-5/8" (296 mm) W x 6" (153 mm) D x 1-1/4" (32 mm) H	Clear	$103.99
CA-NECKLACE-1	Necklace Organizer	11-5/8" (296 mm) W x 6" (153 mm) D x 1-1/4" (32 mm) H	Clear	$105.99
Drawer Front Mounting Brackets (Bulk Pack)				
CJD-DMB-KIT	Drawer Front Mount Bracket		Black	$6.99 ea.

Note: Minimum Height Opening: 3-1/4" (82 mm)



Innovation through *Organization*™







LAZY SUSAN SOLUTIONS

CONCEAL THE **CHAOS**

Standing the test of time, our Lazy Susan line is revered as the best in the industry with exceptional quality, unfaltering durability and premium selection! Our extensive collection of Lazy Susans includes Full-Circle, Kidney-Shaped, D-Shaped, Pie-Cut and Half-Moon designs to accommodate any cabinet shape. With sizes ranging from 10" to 32" and your choice of polymer, wood or wire, you are sure to find the perfect Susan for any cabinet size or style. The bottom line - we know Lazy Susans! Next time you are specifying a Lazy Susan, call on the brand you can trust for superior quality and the brand that started it all: Rev-A-Shelf®!

PROP 65 WARNING FOR CALIFORNIA RESIDENTS

WARNING: These products can expose you to chemicals such as formaldehyde, lead or styrene, which are known to the State of California to cause cancer and birth defects or other reproductive harm. For more information go to www.P65Warnings.ca.gov

REV-A-SHELF®

Lazy Susan

Polymer Lazy Daisy

- Unique patented snap pin design
- Ribbed tray surface
- Molded polymer hubs
- Independently rotating
  (Not applicable on pie cut)
- Almond and white
- Polypropylene material
- US Patent No.'s 7,922,016 and 8,528,873

Our Polymer Lazy Daisy Lazy Susans are tested to exceed BHMA Class II Specs: 15 lbs per square foot at 50k cycles

All of our Lazy Susans are manufactured using high quality materials and are backed by a limited Lifetime Warranty. We have developed a tiered category system (Good, Better, Best) that will allow you to quickly identify which configuration will give you the features you want, with the value you require.

MADE IN THE USA



Good



Tray Configurations

Call for Bulk Pricing 800-626-1126

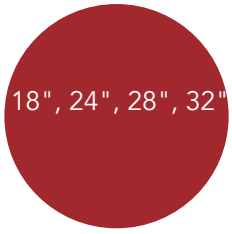

Full-Circle



D-Shaped

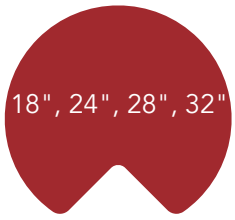

Kidney-Shaped

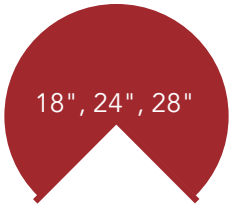

Pie-Cut

See Page 337 for Hardware

** Insert "11" for White or "15" for Almond finish



FULL-CIRCLE SHELF

Bottom Mount Polymer Lazy Daisy w/ Hardware

PRODUCT	DESCRIPTION	DIMS	FINISH	SLP
LD-2061-18BM-**-1	Single Shelf	18" Diameter (457 mm)	Polymer	$48.99
LD-2061-24BM-**-1	Single Shelf	24" Diameter (610 mm)	Polymer	$53.99
LD-2061-28BM-**-1	Single Shelf	28" Diameter (711 mm)	Polymer	$59.99
LD-2061-32BM-**-1	Single Shelf	32" Diameter (813 mm)	Polymer	$80.99
(2) Shelf Bottom Mount Polymer Lazy Daisy w/ Hardware				
LD-2062-18BM-**-1	(2) Shelf Set	18" Diameter (457 mm)	Polymer	$74.99
LD-2062-24BM-**-1	(2) Shelf Set	24" Diameter (610 mm)	Polymer	$92.99
LD-2062-28BM-**-1	(2) Shelf Set	28" Diameter (711 mm)	Polymer	$95.99
LD-2062-32BM-**-1	(2) Shelf Set	32" Diameter (813 mm)	Polymer	$125.99
(2) Shelf Polymer Lazy Daisy w/ 26"-31" Telescoping Post				
LD-2062-18-**-1	(2) Shelf Set	18" Diameter (457 mm)	Polymer	$77.99
LD-2062-24-**-1	(2) Shelf Set	24" Diameter (610 mm)	Polymer	$95.99
LD-2062-28-**-1	(2) Shelf Set	28" Diameter (711 mm)	Polymer	$98.99
LD-2062-32-**-1	(2) Shelf Set	32" Diameter (813 mm)	Polymer	$132.99
(3) Shelf Polymer Lazy Daisy w/ 34"-41" Telescoping Post				
LD-2063-1836-**-1	(3) Shelf Set	18" Diameter (457 mm)	Polymer	$106.99

(Attaches to the cabinet door)



PIE-CUT SHELF

(2) Shelf Polymer Lazy Daisy w/ 26"-31" Telescoping Post

PRODUCT	DESCRIPTION	DIMS	FINISH	SLP
LD-2942-18-**-1	(2) Shelf Set	18" Diameter (457 mm)	Polymer	$103.99
LD-2942-24-**-1	(2) Shelf Set	24" Diameter (610 mm)	Polymer	$129.99
LD-2942-28-**-1	(2) Shelf Set	28" Diameter (711 mm)	Polymer	$132.99

(Hinged door; not attached)



KIDNEY-SHAPED SHELF

(2) Shelf Polymer Lazy Daisy w/ 26"-31" Telescoping Post

PRODUCT	DESCRIPTION	DIMS	FINISH	SLP
LD-2472-18-**-1	(2) Shelf Set	18" Diameter (457 mm)	Polymer	$72.99
LD-2472-24-**-1	(2) Shelf Set	24" Diameter (610 mm)	Polymer	$87.99
LD-2472-28-**-1	(2) Shelf Set	28" Diameter (711 mm)	Polymer	$103.99
LD-2472-32-**-1	(2) Shelf Set	32" Diameter (813 mm)	Polymer	$124.99
(2) Shelf Bottom Mount Polymer Lazy Daisy w/ Hardware				
LD-2472-18BM-**-1	(2) Shelf Set	18" Diameter (457 mm)	Polymer	$68.99
LD-2472-24BM-**-1	(2) Shelf Set	24" Diameter (610 mm)	Polymer	$83.99
LD-2472-28BM-**-1	(2) Shelf Set	28" Diameter (711 mm)	Polymer	$95.99
LD-2472-32BM-**-1	(2) Shelf Set	32" Diameter (813 mm)	Polymer	$124.99
(3) Shelf Bottom Mount Polymer Lazy Daisy w/ 34"-41" Telescoping Post				
LD-2473-1836-**-1	(3) Shelf Set	18" Diameter (457 mm)	Polymer	$108.99



D-SHAPED SHELF

Bottom Mount Polymer Lazy Daisy w/ Hardware

PRODUCT	DESCRIPTION	DIMS	FINISH	SLP
LD-2261-32BM-**-1	Single Shelf	32" Diameter (813 mm)	Polymer	$83.99
(2) Shelf Polymer Lazy Daisy w/ Hardware				
LD-2262-32-**-1	(2) Shelf Set	32" Diameter (813 mm)	Polymer	$144.99
(2) Shelf Bottom Mount Polymer Lazy Daisy w/ Hardware				
LD-2262-32BM-**-1	(2) Shelf Set	32" Diameter (813 mm)	Polymer	$137.99

SPECIFICATIONS LAZY DAISY POLYMER SHELVES

Shelf	Material	Series	A	B	C	D	Post System
18" Kidney	Polymer	LD	1-1/8"	2"	11"	18"	25 mm IND./DEP.
24" Kidney	Polymer	LD	1-3/4"	2-3/4"	14-3/4"	24"	25 mm IND./DEP.
28" Kidney	Polymer	LD	3"	4-3/8"	18-3/8"	27-5/8"	25 mm IND./DEP.
32" Kidney	Polymer	LD	4"	6"	21-7/8"	31-3/4"	25 mm IND./DEP.

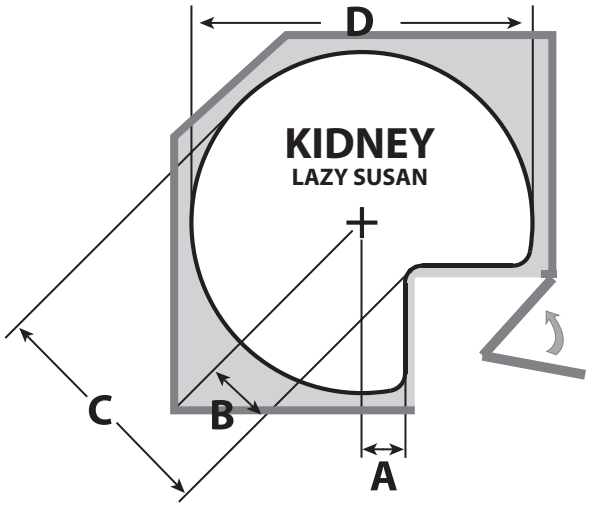

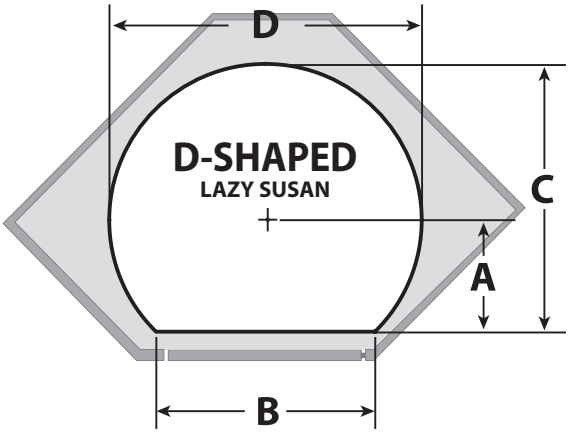

Shelf	Material	Series	A	B	C	D	Post System
32" D-Shaped	Polymer	LD	14"	14-3/4"	29-7/8"	31-3/4"	25 mm IND./DEP.

(Attaches to the cabinet door)

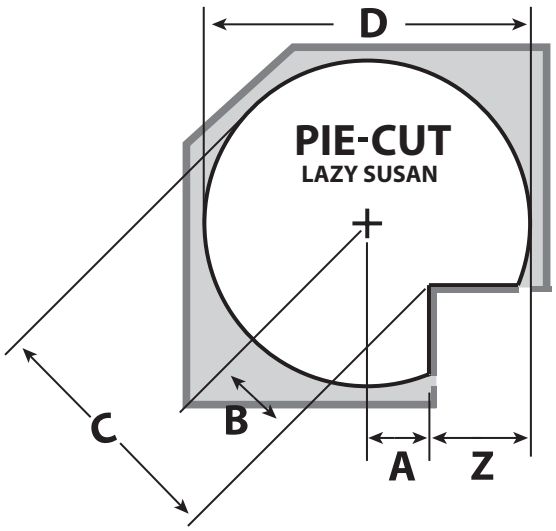

Shelf	Material	Series	A	B	C	D	Z
18" Pie-Cut	Polymer	LD	1-1/8"	1-5/8"	10-5/8"	18"	8" + 1/8" GAP
24" Pie-Cut	Polymer	LD	1-5/8"	2-3/8"	14-3/8"	24"	10-3/8" + 1/8" GAP
28" Pie-Cut	Polymer	LD	3"	4-1/4"	18"	27-5/8"	10-7/8" + 1/8" GAP

For custom applications, a trial installation is recommended. Door edge profile, thickness and gaps all factor in installation.

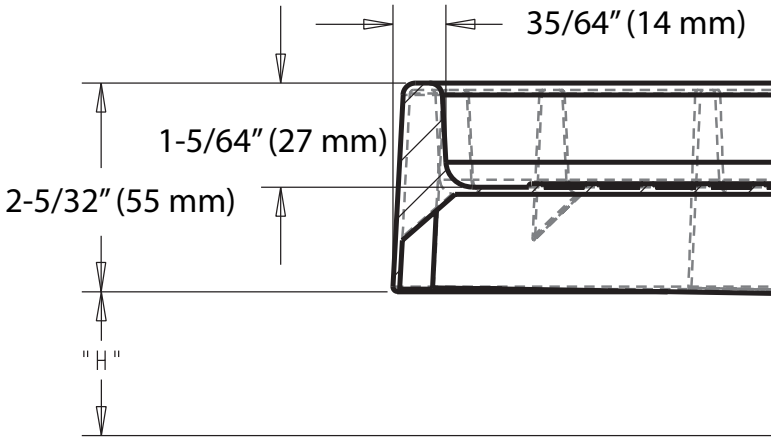

Tray Shape	"H"
Full-Circle	1-19/32" (41 mm)
Kidney & D-Shaped	1-7/16" (37 mm)

WE HAVE EVEN MORE OPTIONS!

LAZY SUSANS

Call your salesperson or 800-626-1126 if you would like more information on

Custom Tray/Hardware Configurations

Pallet Program/Enviro Packaging:

Many of our Lazy Susans are available in pallet quantities:

- Volume pricing
- Reduced transportation cost
- Minimal storage space
- Environmentally conscious packaging



Lazy Susan

Polymer Value Line

- Twist-n-Lock telescoping post
- Molded polymer hubs
- Independently rotating
- Almond and white
- Polystyrene material

Our Lazy Susans are tested to exceed BHMA Class 1 Specs: 20 lbs. per square foot at 75K cycles.

All of our Lazy Susans are manufactured using high quality materials and are backed by a limited Lifetime Warranty. We have developed a tiered category system (Good, Better, Best) that will allow you to quickly identify which configuration will give you the features you want, with the value you require.

MADE IN THE USA



Better



Shelf	Material	Series	A	B	C	D	Post System
24" Kidney	Polymer	3400	1-1/2"	2-5/16"	14-5/16"	24"	1" IND.
28" Kidney	Polymer	3400	3"	4-11/16"	18-5/8"	28"	1" IND.
32" Kidney	Polymer	3400	4-1/4"	6-7/16"	22-7/16"	32"	1" IND.

IND.=INDEPENDENTLY ROTATING SYSTEM

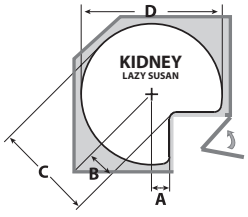



OPTIONAL: Ring cap included on 18" and 20" unit eliminates detent

Tray Configurations

Call for Bulk Pricing 800-626-1126

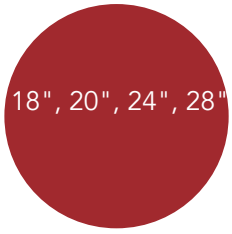

Full-Circle



Kidney-Shaped

See Page 337 for Hardware



Twist-n-Lock Telescoping Post

rev-a-shelf.com | 800-626-1126 | info@rev-a-shelf.com

REV-A-SHELF

FULL-CIRCLE SHELF

NOTE: ** Insert "11" for White or "15" for Almond finish

Value Line Lazy Susan w/ Hub - *Must purchase bottom mount hardware to attach to cabinet*

PRODUCT	DESCRIPTION	DIMS	FINISH	SLP
3071-18-**-52	Single Shelf	18" (457 mm) Diameter	Polymer	$36.99
3071-20-**-52	Single Shelf	20" (508 mm) Diameter	Polymer	$41.99
3071-24-**-52	Single Shelf	24" (610 mm) Diameter	Polymer	$45.99
3071-28-**-52	Single Shelf	28" (711 mm) Diameter	Polymer	$56.99
Bottom Mount Hardware				
BM1-VL-04-52	Hardware	4-1/4" (108 mm) H	Zinc	$27.99
(2) Shelf Value Line Lazy Susan w/ 26"-31" (660–788 mm) Telescoping Post				
3072-18-**-52	(2) Shelf Set	18" (457 mm) Diameter	Polymer	$79.99
3072-20-**-52	(2) Shelf Set	20" (508 mm) Diameter	Polymer	$88.99
3072-24-**-52	(2) Shelf Set	24" (610 mm) Diameter	Polymer	$99.99
3072-28-**-52	(2) Shelf Set	28" (711 mm) Diameter	Polymer	$112.99
(3) Shelf Value Line Lazy Susan w/ 31"-38" (788–965 mm) Telescoping Post				
3073-18-**-531	(3) Shelf Set	18" (457 mm) Diameter	Polymer	$123.99
3073-20-**-531	(3) Shelf Set	20" (508 mm) Diameter	Polymer	$130.99
(3) Shelf Value Line Lazy Susan w/ 38"-46" (965–1169 mm) Telescoping Post				
3073-18-**-536	(3) Shelf Set	18" (457 mm) Diameter	Polymer	$126.99
3073-20-**-536	(3) Shelf Set	20" (508 mm) Diameter	Polymer	$132.99

KIDNEY-SHAPED SHELF

(Hinged door; not attached)

Value Line Lazy Susan w/ Hub - *Must purchase bottom mount hardware to attach to cabinet*

PRODUCT	DESCRIPTION	DIMS	FINISH	SLP
3471-24-**-52	Single Shelf	24" (610 mm) Diameter	Polymer	$40.99
3471-28-**-52	Single Shelf	28" (711 mm) Diameter	Polymer	$50.99
3471-32-**-52	Single Shelf	32" (813 mm) Diameter	Polymer	$59.99
Bottom Mount Hardware				
BM1-VL-04-52	Hardware	4-1/4" (108 mm) H	Zinc	$27.99
(2) Shelf Value Line Lazy Susan w/ 26"-31" (660–788 mm) Telescoping Post				
3472-24-**-52	(2) Shelf Set	24" (610 mm) Diameter	Polymer	$99.99
3472-28-**-52	(2) Shelf Set	28" (711 mm) Diameter	Polymer	$116.99
3472-32-**-52	(2) Shelf Set	32" (813 mm) Diameter	Polymer	$130.99

LIP SPECIFICATIONS

WALL SHELVES

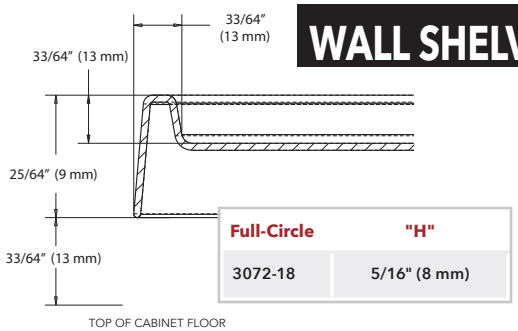

Full-Circle	"H"
3072-18	5/16" (8 mm)

BASE SHELVES

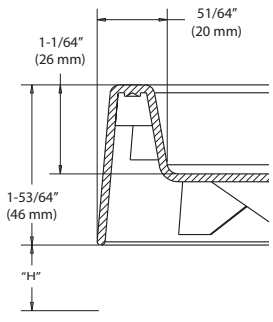

Full-Circle	"H"
3072-24 & 28	1-3/64" (27 mm)

Kidney	"H"
3472-24, 28 & 32	1-3/64" (27 mm)

VALUE LINE POLYMER SHELVES

Lazy Susan

RAS Polymer

- Chrome post and hubs
- Independently and dependently rotating
- Almond and white
- Polystyrene material

Our Lazy Susans are tested to exceed BHMA Class 1 Specs: 20 lbs. per square foot at 75K cycles.

All of our lazy susans are manufactured using high quality materials and are backed by a limited Lifetime Warranty. We have developed a tiered category system (Good, Better, Best) that will allow you to quickly identify which configuration will give you the features you want, with the value you require.

MADE IN THE USA



Best



Tray Configurations

Call for Bulk Pricing 800-626-1126

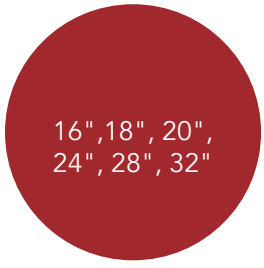

Full-Circle

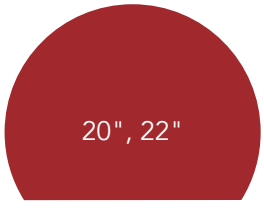

D-Shaped

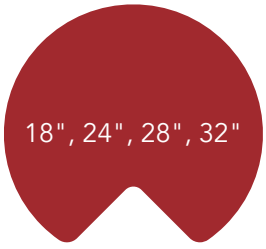

Kidney-Shaped

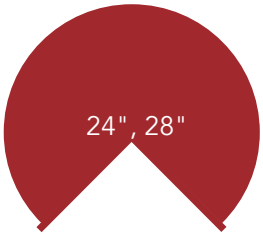

Pie-Cut



Half-Moon

See Page 337 for Hardware

D-SHAPED SHELF



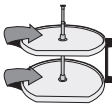

DEPENDENTLY ROTATING

(2) Shelf RAS Polymer Lazy Susan w/ 24"–31" (610–788 mm) Telescoping Post

PRODUCT	DESCRIPTION	DIMS	FINISH	SLP
7012-20-**-52	(2) Shelf Set	20" (508 mm) Diameter	Polymer	$98.99
(3) Shelf RAS Polymer Lazy Susan w/ 38"–46" (965–1169 mm) Telescoping Post				
7013-20-**-526	(3) Shelf Set	20" (508 mm) Diameter	Polymer	$155.99

NOTES: 3/4" (19 mm) diameter post system. **7012 -** Telescoping post dimensions 12" (305 mm) upper & 21" (534 mm) lower post. **7013 -** Telescoping post dimensions 12" (305 mm) upper & 36" (915 mm) lower post. ** **Available colors: 11 White, 15 Almond** Tested to exceed BHMA Class 1 Specifications.

D-SHAPED SHELF

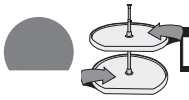

INDEPENDENTLY ROTATING

RAS Polymer Lazy Susan w/ Hub - *Must purchase bottom mount hardware to attach to cabinet*

PRODUCT	DESCRIPTION	DIMS	FINISH	SLP
6271-20-**-52	Single Shelf	20" (508 mm) Diameter	Polymer	$54.99
6271-22-**-52	Single Shelf	22" (559 mm) Diameter	Polymer	$64.99
Bottom Mount Hardware				
BM1-04-52	Hardware	4-11/16" (119 mm) H	Zinc	$34.99
BM1-18-52	Hardware for (2) Shelf Set	17-7/8" (454 mm) H	Zinc	$53.99

Bottom Mount RAS Polymer Lazy Susan w/ Hardware

PRODUCT	DESCRIPTION	DIMS	FINISH	SLP
6221-20-**-52	Single Shelf	20" (508 mm) Diameter	Polymer	$72.99
6221-22-**-52	Single Shelf	22" (559 mm) Diameter	Polymer	$76.99
(2) Shelf RAS Polymer Lazy Susan w/ 26"–32" (660-813 mm) Telescoping Post				
6272-20-**-52	(2) Shelf Set	20" (508 mm) Diameter	Polymer	$174.99
6272-22-**-52	(2) Shelf Set	22" (559 mm) Diameter	Polymer	$177.99
(3) Shelf RAS Polymer Lazy Susan w/ 38"–46" (965–1169 mm) Telescoping Post				
6273-20-**-536	(3) Shelf Set	20" (508 mm) Diameter	Polymer	$253.99
6273-22-**-536	(3) Shelf Set	22" (559 mm) Diameter	Polymer	$259.99

KIDNEY-SHAPED SHELF

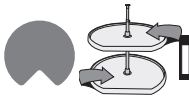

INDEPENDENTLY ROTATING

RAS Polymer Lazy Susan w/ Hub - *Must purchase bottom mount hardware to attach to cabinet*

PRODUCT	DESCRIPTION	DIMS	FINISH	SLP
6471-18-**-52	Single Shelf	18" (457 mm) Diameter	Polymer	$53.99
6471-24-**-52	Single Shelf	24" (610 mm) Diameter	Polymer	$66.99
6471-28-**-52	Single Shelf	28" (711 mm) Diameter	Polymer	$77.99
6471-32-**-52	Single Shelf	32" (813 mm) Diameter	Polymer	$83.99
Bottom Mount Hardware				
BM1-04-52	Hardware	4-11/16" (119 mm) H	Zinc	$34.99
BM1-18-52	Hardware for (2) Shelf Set	17-7/8" (454 mm) H	Zinc	$53.99

Bottom Mount RAS Polymer Lazy Susan w/ Hardware

PRODUCT	DESCRIPTION	DIMS	FINISH	SLP
6421-18-**-52	Single Shelf	18" (457 mm) Diameter	Polymer	$72.99
6421-24-**-52	Single Shelf	24" (610 mm) Diameter	Polymer	$77.99
6421-28-**-52	Single Shelf	28" (711 mm) Diameter	Polymer	$88.99
6421-32-**-52	Single Shelf	32" (813 mm) Diameter	Polymer	$99.99
(2) Shelf RAS Polymer Lazy Susan w/ 26"–32" (660-813 mm) Telescoping Post				
6472-18-**-52	(2) Shelf Set	18" (457 mm) Diameter	Polymer	$143.99
6472-24-**-52	(2) Shelf Set	24" (610 mm) Diameter	Polymer	$145.99
6472-28-**-52	(2) Shelf Set	28" (711 mm) Diameter	Polymer	$171.99
6472-32-**-52	(2) Shelf Set	32" (813 mm) Diameter	Polymer	$188.99

FULL-CIRCLE SHELF



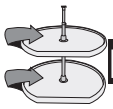

DEPENDENTLY ROTATING

(2) Shelf RAS Polymer Lazy Susan w/ 24"–31" (610–788 mm) Telescoping Post

PRODUCT	DESCRIPTION	DIMS	FINISH	SLP
6012-18-**-52	(2) Shelf Set	18" (457 mm) Diameter	Polymer	$86.99
6012-20-**-52	(2) Shelf Set	20" (508 mm) Diameter	Polymer	$93.99
6012-24-**-52	(2) Shelf Set	24" (610 mm) Diameter	Polymer	$106.99
6012-28-**-52	(2) Shelf Set	28" (711 mm) Diameter	Polymer	$127.99

(3) Shelf RAS Polymer Lazy Susan w/ 38"–46" (965–1169 mm) Telescoping Post

6013-18-**-526	(3) Shelf Set	18" (457 mm) Diameter	Polymer	$130.99
6013-20-**-526	(3) Shelf Set	20" (508 mm) Diameter	Polymer	$141.99

NOTES: 3/4" (19 mm) diameter post system. **6012 -** Telescoping post dimensions 12" (305 mm) upper & 21" (534 mm) lower post.
6013 - Telescoping post dimensions 12" (305 mm) upper & 36" (915 mm) lower post. Post length can be cut to accommodate inner cabinet heights of less than 38" (965 mm).

FULL-CIRCLE SHELF



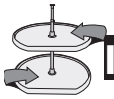

INDEPENDENTLY ROTATING

RAS Polymer Lazy Susan w/ Hub - *Must purchase bottom mount hardware to attach to cabinet*

PRODUCT	DESCRIPTION	DIMS	FINISH	SLP
6071-16-**-52	Single Shelf	16" (406 mm) Diameter	Polymer	$52.99
6071-18-**-52	Single Shelf	18" (457 mm) Diameter	Polymer	$53.99
6071-20-**-52	Single Shelf	20" (508 mm) Diameter	Polymer	$56.99
6071-24-**-52	Single Shelf	24" (610 mm) Diameter	Polymer	$62.99
6071-28-**-52	Single Shelf	28" (711 mm) Diameter	Polymer	$72.99
6071-32-**-52	Single Shelf	32" (813 mm) Diameter	Polymer	$84.99

Bottom Mount Hardware

BM1-04-52	Hardware	4-1/4" (108 mm) H	Zinc	$34.99

Bottom Mount RAS Polymer Lazy Susan w/ Hardware

PRODUCT	DESCRIPTION	DIMS	FINISH	SLP
6621-16-**-52	Single Shelf	16" (406 mm) Diameter	Polymer	$69.99
6621-18-**-52	Single Shelf	18" (457 mm) Diameter	Polymer	$71.99
6621-20-**-52	Single Shelf	20" (508 mm) Diameter	Polymer	$72.99
6621-24-**-52	Single Shelf	24" (610 mm) Diameter	Polymer	$82.99
6621-28-**-52	Single Shelf	28" (711 mm) Diameter	Polymer	$98.99
6621-32-**-52	Single Shelf	32" (813 mm) Diameter	Polymer	$114.99

(2) Shelf RAS Polymer Lazy Susan w/ 26"–32" (660-813 mm) Telescoping Post

6072-16-**-52	(2) Shelf Set	16" (406 mm) Diameter	Polymer	$156.99
6072-18-**-52	(2) Shelf Set	18" (457 mm) Diameter	Polymer	$159.99
6072-20-**-52	(2) Shelf Set	20" (508 mm) Diameter	Polymer	$174.99
6072-24-**-52	(2) Shelf Set	24" (610 mm) Diameter	Polymer	$209.99
6072-28-**-52	(2) Shelf Set	28" (711 mm) Diameter	Polymer	$224.99
6072-32-**-52	(2) Shelf Set	32" (813 mm) Diameter	Polymer	$235.99

(3) Shelf RAS Polymer Lazy Susan w/ 38"–46" (965–1169 mm) Telescoping Post

6073-18-**-536	(3) Shelf Set	18" (457 mm) Diameter	Polymer	$235.99
6073-20-**-536	(3) Shelf Set	20" (508 mm) Diameter	Polymer	$241.99

NOTES: 1" (26 mm) diameter post system. **6072 -** Telescoping post dimensions 9-1/4" (235 mm) upper & 21" (534 mm) lower post **6073. -** Telescoping post dimensions 9-1/4" (235 mm) upper & 36" (915 mm) lower post. **Additional shelves and/or longer posts can be special ordered.** Positioning base without wheels 6260-77-2-52 mounts on base of cabinet.

PIE-CUT SHELF



(Attaches to the cabinet door)

(2) Shelf RAS Polymer Lazy Susan w/ 26"–32" (660-813 mm) Telescoping Post

PRODUCT	DESCRIPTION	DIMS	FINISH	SLP
6942-24-**-52	(2) Shelf Set	24" (610 mm) Diameter	Polymer	$125.99
6942-28-**-52	(2) Shelf Set	28" (711 mm) Diameter	Polymer	$159.99

HALF-MOON SHELF

PRODUCT	DESCRIPTION	DIMS	MCO	CAB	FINISH	SLP
(2) Shelf RAS Polymer Lazy Susan w/ Pivot						
6842-31-**-570	(2) Shelf Set	31" (787 mm) Diameter	13-1/4" (337 mm) - FF 15" (381 mm) - FL	BC42	Polymer	$233.99
6842-33-**-570	(2) Shelf Set	33" (838 mm) Diameter	16-1/8" (410 mm) - FF 17-7/16" (443 mm) - FL	BC45	Polymer	$239.99
6842-39-**-570	(2) Shelf Set	39" (991 mm) Diameter	19-1/4" (489 mm) - FF 20-3/4" (527 mm) - FL	BC48	Polymer	$277.99
RAS Polymer Lazy Susan w/ Pivot and Slide						
6881-31-**-52	Single Shelf	31" (787 mm) Diameter	13-1/4" (337 mm) - FF 15" (381 mm) - FL	BC42	Polymer	$192.99
6881-33-**-52	Single Shelf	33" (838 mm) Diameter	16-1/8" (410 mm) - FF 17-7/16" (443 mm) - FL	BC45	Polymer	$193.99
6881-39-**-52	Single Shelf	39" (991 mm) Diameter	19-1/4" (489 mm) - FF 20-3/4" (527 mm) - FL	BC48	Polymer	$212.99
(2) Shelf RAS Polymer Lazy Susan w/ Pivot and Slides						
6882-31-**-570	(2) Shelf Set	31" (787 mm) Diameter	13-1/4" (337 mm) - FF 15" (381 mm) - FL	BC42	Polymer	$329.99
6882-33-**-570	(2) Shelf Set	33" (838 mm) Diameter	16-1/8" (410 mm) - FF 17-7/16" (443 mm) - FL	BC45	Polymer	$335.99
6882-39-**-570	(2) Shelf Set	39" (991 mm) Diameter	19-1/4" (489 mm) - FF 20-3/4" (527 mm) - FL	BC48	Polymer	$378.99
Hardware						
6882-1008-04-52	Half-Moon Slide Kit (1 Pair)	10-1/2" (267 mm) Extension			Polymer	$66.99

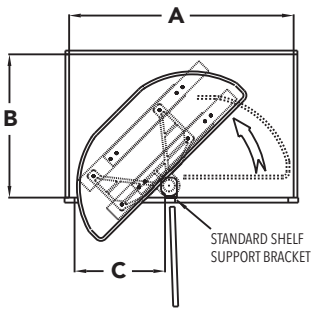

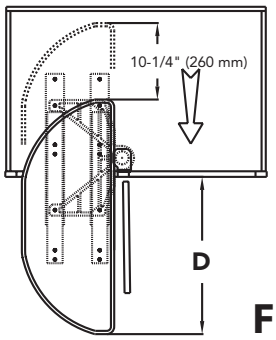

FRAMED CABINET

DIMENSIONS A, B, AND C ARE MINIMUMS. 31" TRAY SHOWN IN DIAGRAM.

NOM Tray size	A	B	C	D
31" (787 mm)	33-11/16" (856 mm)	21-1/2" (546 mm)	13-1/4" (344 mm)	21-1/16" (535 mm)
33" (838 mm)	34-5/16" (872 mm)	18-9/16" (471 mm)	16-1/8" (410 mm)	24-1/16" (611 mm)
39" (991 mm)	40-11/16" (1033 mm)	21-13/16" (554 mm)	19-1/4" (491 mm)	27-3/8" (695 mm)

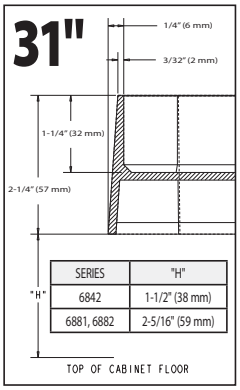

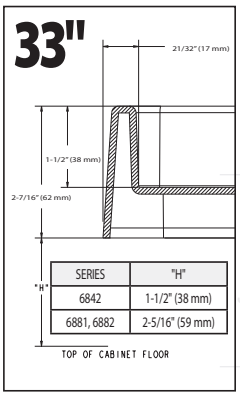

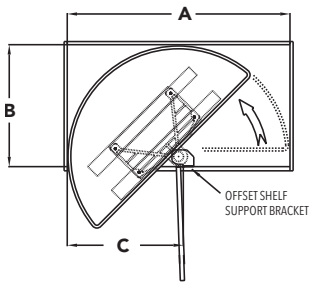

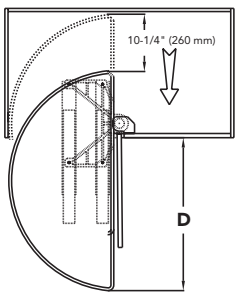

FRAMELESS CABINET

DIMENSIONS A, B, AND C ARE MINIMUMS. 39" TRAY SHOWN IN DIAGRAM.

NOM Tray size	A	B	C	D
31" (787 mm)	32-13/16" (833 mm)	21-1/2" (546 mm)	15" (381 mm)	21-1/16" (535 mm)
33" (838 mm)	33-3/16" (843 mm)	18-9/16" (471 mm)	17-7/16" (443 mm)	24-1/16" (611 mm)
39" (991 mm)	39-7/8" (1013 mm)	21-13/16" (554 mm)	20-3/4" (527 mm)	27-3/8" (695 mm)

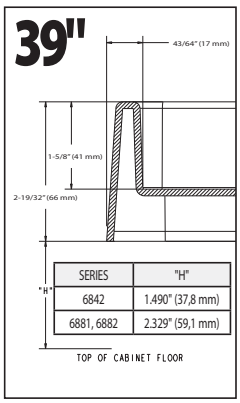

SPECIFICATIONS POLYMER SHELVES

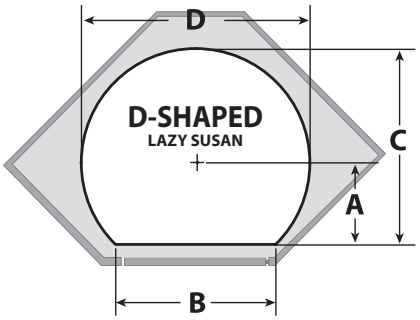

Shelf	Material	Series	A	B	C	D	Post System
20" D-Shaped	Polymer	6200	8-7/8"	9-1/4"	19"	20-1/8"	1" IND.
22" D-Shaped	Polymer	6200	7-3/16"	16-5/8"	18-3/16"	22"	1" IND.

IND. = Independently Rotating System

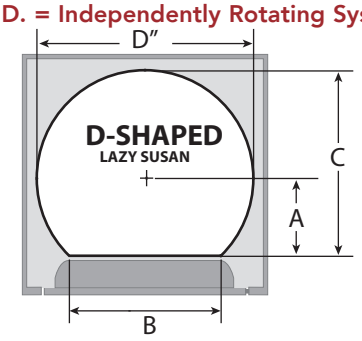

Shelf	Material	Series	A	B	C	D	Post System
20" D-Shaped	Polymer	7000	8-7/8"	9-1/4"	18-7/8"	20"	3/4" DEP.

DEP. = Dependently Rotating System

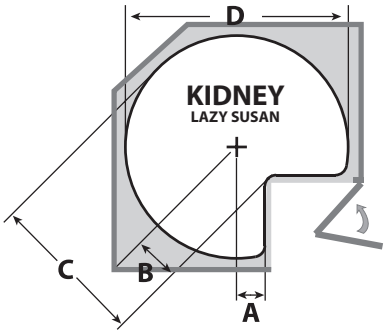

Shelf	Material	Series	A	B	C	D	Post System
18" Kidney	Polymer	6471	1-3/4"	2-13/16"	11-13/16"	18"	1" IND.
24" Kidney	Polymer	6471	1-1/2"	2-5/16"	14-5/16"	24"	1" IND.
28" Kidney	Polymer	6471	3"	4-11/16"	18-5/8"	28"	1" IND.
32" Kidney	Polymer	6471	4-1/4"	6-7/16"	22-7/16"	32"	1" IND.

IND. = Independently Rotating System

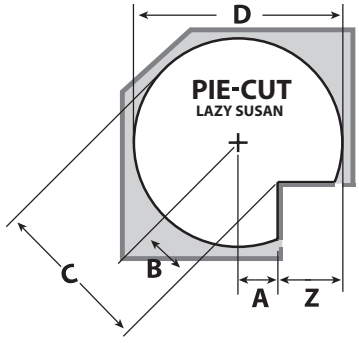

Shelf	Material	Series	A	B	C	D	Z	Post System
24" Pie-Cut	Polymer	6942	1-3/8"	1-15/16"	13-15/16"	24"	10-9/16" + 1/8" gap	1" DEP.
28" Pie-Cut	Polymer	6942	3"	4-1/4"	18-1/4"	28"	11" + 1/8" gap	1" DEP.

DEP. = Dependently Rotating System

For custom applications, a trial installation is recommended.
Door edge profile, thickness and gaps all factor in installation

LIP SPECIFICATIONS PIE-CUT POLYMER SHELVES

Dimensions are for reference only, and may change based on hardware used, etc.

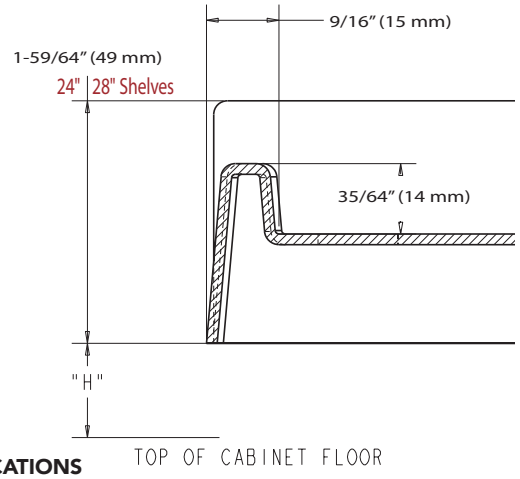

I" Shaft Pie-Cut	"H"
6942-24	1/4" (6 mm) *
6942-28	1/4" (6 mm) *

*6942-24 and 6942-28 can sit flush on top of the cabinet floor. 1/4" (6 mm) is recommended for clearance.

REV-A-SHELF® LAZY SUSANS ARE TESTED TO EXCEED BHMA CLASS 1 SPECIFICATIONS

Dimensions are for reference only, and may change based on hardware used, etc.

WALL SHELVES

Polymer Lazy Susan	
Full-Circle	**"H"**
3072-18	5/16" (8 mm)
6621-16, 18 & 20	1-19/64" (33 mm)
6072-16, 18 & 20	1-19/64" (33 mm)
6073-18 & 20	1-19/64" (33 mm)
6065-16 & 18	2-9/32" (58 mm)
6012-18 & 20	1/4" (6 mm)*
6013-18 & 20	1/4" (6 mm)*
Kidney	**"H"**
6421-18	1-19/64" (33 mm)
6472-18	1-19/64" (33 mm)

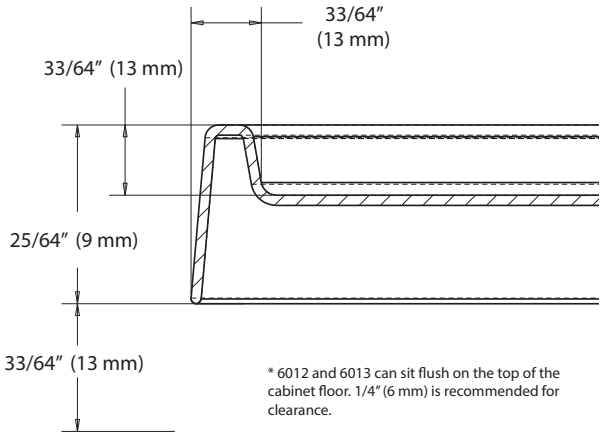

* 6012 and 6013 can sit flush on the top of the cabinet floor. 1/4" (6 mm) is recommended for clearance.

BASE SHELVES

Polymer Lazy Susan	
Full-Circle	**"H"**
3072-24 & 28	1-3/64" (27 mm)
6621-24, 28 & 32	1-15/64" (31 mm)
6072-24, 28 & 32	1-15/64" (31 mm)
Kidney	**"H"**
3472-24, 28 & 32	1-3/64" (27 mm)
6421-24, 28 & 32	1-15/64" (31 mm)
6472-24, 28 & 32	1-15/64" (31 mm)

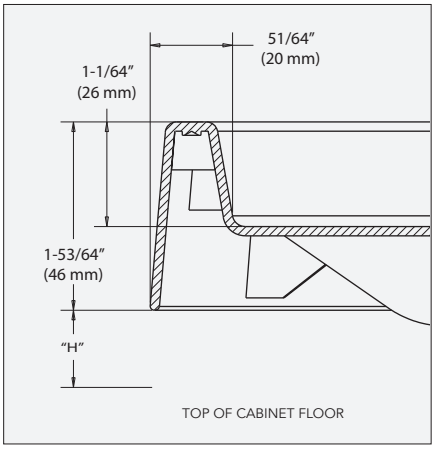

WALL SHELVES

Independently Rotation	
20" D-Shaped	**"H"**
6221-20	1-1/2" (38 mm)
6272-20	1-1/2" (38 mm)
6273-20	1-1/2" (38 mm)
Dependently Rotation	
20" D-Shaped	**"H"**
7012-20	1/4" (6 mm)
7013-20	1/4" (6 mm)

PANTRY SHELVES

Polymer Lazy Susan	
22" D-Shaped	**"H"**
6221-22	1-15/64" (31 mm)
6272-22	1-15/64" (31 mm)
6273-22	1-15/64" (31 mm)
6265-22	2-13/64" (56 mm)

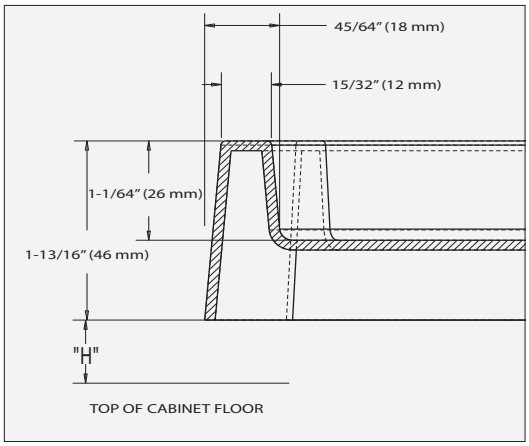

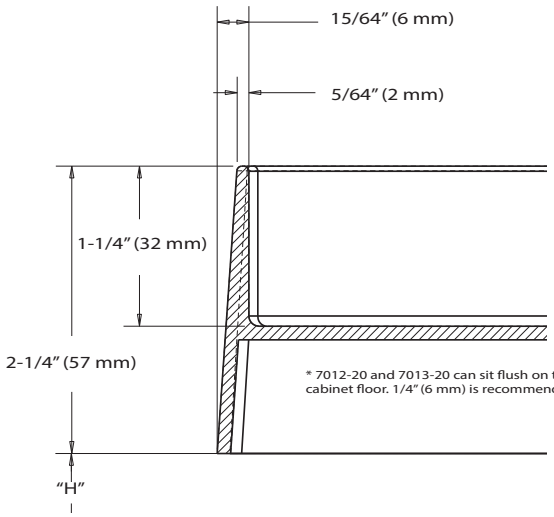

* 7012-20 and 7013-20 can sit flush on the top of the cabinet floor. 1/4" (6 mm) is recommended for clearance.

Lazy Susan

Banded Wood

- 2" banded wood rim
- Doweled (2) butt joint
- 5/8" thick maple shelf bottom
- Independently rotating
- Almond hardware
- Steel bearings

All wood products are TSCA Title VI compliant.

Our Lazy Susans are tested to exceed BHMA Class 1 Specs: 20 lbs. per square foot at 75K cycles.

All of our lazy susans are manufactured using high-quality materials and are backed by a limited lifetime warranty. We have developed a tiered category system (Good, Better, Best) that will allow you to quickly identify which configuration will give you the features you want, with the value you require.

MADE IN THE USA



Good



Tray Configurations

Call for Bulk Pricing 800-626-1126

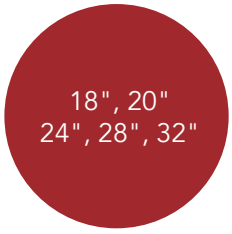

Full-Circle

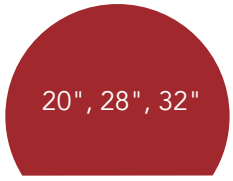

D-Shaped



Kidney-Shaped

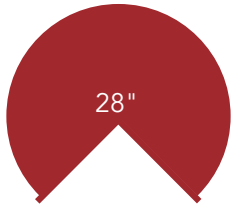

Pie-Cut

See Page 337 for Hardware

FULL-CIRCLE SHELF



PRODUCT	DESCRIPTION	DIMS	FINISH	SLP
Banded Wood Lazy Daisy w/ Steel Bearing				
LD-4BW-001-18SB-1	Single Shelf w/ 7" Steel Bearing	18" (457 mm) Diameter	Maple	$131.99
LD-4BW-001-20SB-1	Single Shelf w/ 7" Steel Bearing	20" (508 mm) Diameter	Maple	$128.99
LD-4BW-001-24SB-1	Single Shelf w/ 10" Steel Bearing	24" (610 mm) Diameter	Maple	$167.99
LD-4BW-001-28SB-1	Single Shelf w/ 10" Steel Bearing	28" (711 mm) Diameter	Maple	$189.99
LD-4BW-001-32SB-1	Single Shelf w/ 10" Steel Bearing	32" (813 mm) Diameter	Maple	$219.99
(2) Shelf Banded Wood Lazy Daisy w/ 26"-31" (660–788 mm) Telescoping Post				
LD-4BW-062-18-1	(2) Shelf Set	18" (457 mm) Diameter	Maple	$241.99
LD-4BW-062-20-1	(2) Shelf Set	20" (508 mm) Diameter	Maple	$243.99
LD-4BW-062-24-1	(2) Shelf Set	24" (610 mm) Diameter	Maple	$299.99
LD-4BW-062-28-1	(2) Shelf Set	28" (711 mm) Diameter	Maple	$348.99
LD-4BW-062-32-1	(2) Shelf Set	32" (813 mm) Diameter	Maple	$396.99
(3) Shelf Banded Wood Lazy Daisy w/ 38"-46" (965–1169 mm) Telescoping Post				
LD-4BW-063-1836-1	(3) Shelf Set	18" (457 mm) Diameter	Maple	$363.99.
LD-4BW-063-2036-1	(3) Shelf Set	20" (508 mm) Diameter	Maple	$368.99

*Note: Non-drilled trays without bearings are available, remove "SB" from product number.

PIE-CUT SHELF



(Attaches to the cabinet door)

PRODUCT	DESCRIPTION	DIMS	FINISH	SLP
(2) Shelf Banded Wood Lazy Daisy w/ Hardware				
LD-4BW-942-28-1	(2) Shelf Set	28" (711 mm) Diameter	Maple	$374.99

KIDNEY-SHAPED SHELF



(Hinged door; not attached)

PRODUCT	DESCRIPTION	DIMS	FINISH	SLP
Banded Wood Lazy Daisy w/ Steel Bearing and Stop				
LD-4BW-401-28SBS-1	Single Shelf w/ 7" Steel Bearing	28" (711 mm) Diameter	Maple	$162.99
LD-4BW-401-32SBS-1	Single Shelf w/ 10" Steel Bearing	32" (813 mm) Diameter	Maple	$203.99
(2) Shelf Banded Wood Lazy Daisy w/ 26"-31" (660–788 mm) Telescoping Post				
LD-4BW-472-24-1	(2) Shelf Set	24" (610 mm) Diameter	Maple	$278.99
LD-4BW-472-28-1	(2) Shelf Set	28" (711 mm) Diameter	Maple	$319.99
LD-4BW-472-32-1	(2) Shelf Set	32" (813 mm) Diameter	Maple	$356.99

*Note: Non-drilled trays without bearings are available, remove "SBS" from product number.

D-SHAPED SHELF



PRODUCT	DESCRIPTION	DIMS	FINISH	SLP
Banded Wood Lazy Daisy w/ Steel Bearing				
LD-4BW-201-20SBS-1	Single Shelf w/ 7" Steel Bearing	20" (508 mm) Diameter	Maple	$132.99
LD-4BW-201-28SBS-1	Single Shelf w/ 7" Steel Bearing	28" (711 mm) Diameter	Maple	$186.99
LD-4BW-201-32SBS-1	Single Shelf w/ 10" Steel Bearing	32" (813 mm) Diameter	Maple	$220.99
(2) Shelf Banded Wood Lazy Daisy w/ 26"-31" (660–788 mm) Telescoping Post				
LD-4BW-262-20-1	(2) Shelf Set	20" (508 mm) Diameter	Maple	$226.99
LD-4BW-262-28-1	(2) Shelf Set	28" (711 mm) Diameter	Maple	$317.99
LD-4BW-262-32-1	(2) Shelf Set	32" (813 mm) Diameter	Maple	$371.99
(3) Shelf Banded Wood Lazy Daisy w/ 38"-46" (965–1169 mm) Telescoping Post				
LD-4BW-263-2036-1	(3) Shelf Set	20" (508 mm) Diameter	Maple	$333.99

*Note: Non-drilled trays without bearings are available, remove "SBS" from product number.

SPECIFICATIONS BANDED WOOD SHELVES

Shelf	Material	Series	A	B	C	D	Post System
20" D-Shaped	Maple	LD-4BW	8-7/8"	6-7/8"	18-1/2"	19-1/2"	1" IND.
28" D-Shaped	Maple	LD-4BW	11-5/8"	13-1/4"	25-1/2"	27-3/4"	1" IND.
32" D-Shaped	Maple	LD-4BW	13-7/8"	13-7/8"	29-3/4"	31-3/4"	1" IND.

IND. = Independently Rotating System

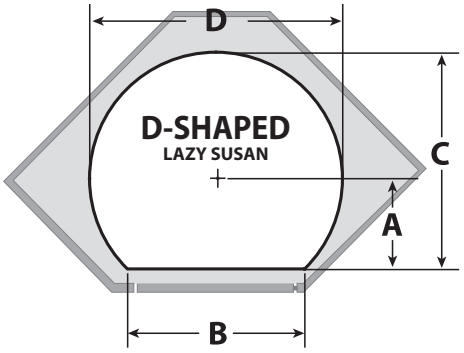

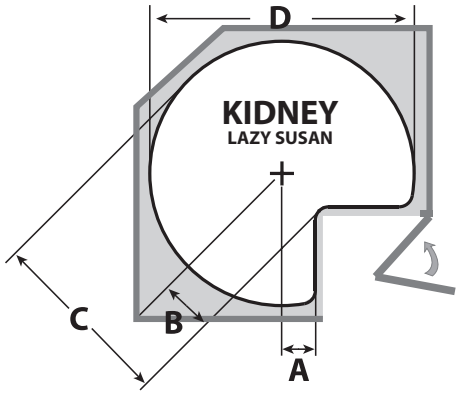

Shelf	Material	Series	A	B	C	D	Post System
24" Kidney	Maple	LD-4BW	1-1/2"	2-3/8"	14-3/8"	24"	1" IND.
28" Kidney	Maple	LD-4BW	2-7/8"	4-3/8"	18-1/4"	27-3/4"	1" IND.
32" Kidney	Maple	LD-4BW	4"	6"	21-7/8"	31-3/4"	1" IND.

IND. = Independently Rotating System

For custom applications a trial installation is recommended.
Door edge profile, thickness, and gaps all factor in installation.

Shelf	Material	Series	A	B	C	D	Z	Post System
28" Pie-Cut	Maple	LD-4BW	3"	4-1/4"	18-1/8"	27-3/4"	10-7/8" + 1/8" gap	1" DEP.

DEP. = Dependently Rotating System

(Attaches to the cabinet door)

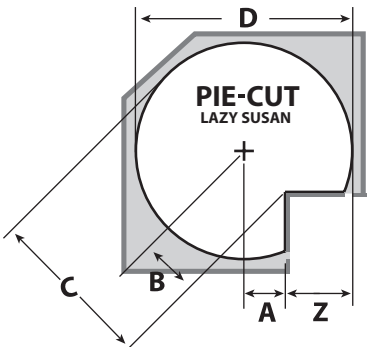

LIP SPECIFICATIONS BANDED WOOD SHELVES

Hardware	Tray Shape	"H"
Steel Bearing	FC, Kidney and D-Shaped	7/8" (23 mm)
Telescopic Post	Full Circle	1-13/32" (36 mm)
Telescopic Post	Kidney and D-Shaped	1-11/64" (30 mm)
Telescopic Post	Pie Cut	1-57/64" (48 mm)

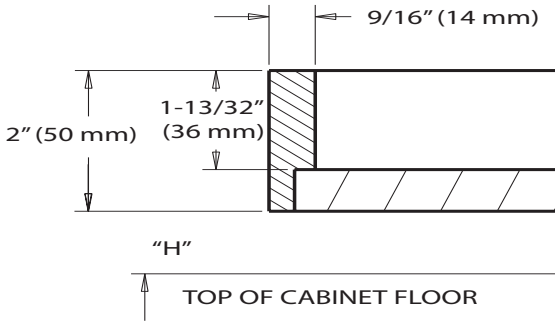

Lazy Susan



- 1-5/8" solid wood frame
- Finger joint
- 5/8" thick natural maple shelf bottom
- Chrome hardware
- Aluminum bearings

All wood products are TSCA Title VI compliant.

Our Lazy Susans are tested to exceed BHMA Class 1 Specs: 20 lbs. per square foot at 75K cycles.

All of our lazy susans are manufactured using high-quality materials and are backed by a limite lifetime warranty. We have developed a tiered category system (Good, Better, Best) that will allow you to quickly identify which configuration will give you the features you want, with the value you require.

MADE IN THE USA

Better



Tray Configurations

Call for Bulk Pricing 800-626-1126

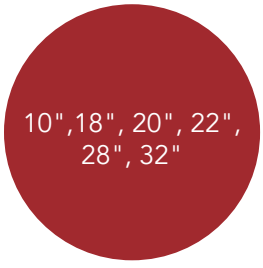

Full-Circle

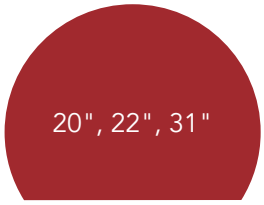

D-Shaped

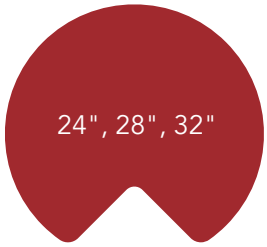

Kidney-Shaped

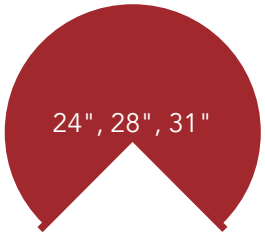

Pie-Cut



Half-Moon

See Page 337 for Hardware

FULL-CIRCLE SHELF



PRODUCT	DESCRIPTION	DIMS	FINISH	SLP
Wood Classic Lazy Susan - No Hardware				
4WLS001-18-52	Single Shelf	18" (457 mm) Diameter	Wood	$114.99
4WLS001-20-52	Single Shelf	20" (508 mm) Diameter	Wood	$136.99
4WLS001-28-52	Single Shelf	28" (711 mm) Diameter	Wood	$188.99
4WLS001-32-52	Single Shelf	32" (813 mm) Diameter	Wood	$211.99
Wood Classic Lazy Susan w/ Aluminum Bearing				
4WLS001-10-B52	Single Shelf w/ 7" Aluminum Bearing	10" (254 mm) Diameter	Wood	$145.99
4WLS001-18-B52	Single Shelf w/ 7" Aluminum Bearing	18" (457 mm) Diameter	Wood	$158.99
4WLS001-20-B52	Single Shelf w/ 7" Aluminum Bearing	20" (508 mm) Diameter	Wood	$183.99
4WLS001-28-B52	Single Shelf w/ 10" Aluminum Bearing	28" (711 mm) Diameter	Wood	$259.99
4WLS001-32-B52	Single Shelf w/ 10" Aluminum Bearing	32" (813 mm) Diameter	Wood	$264.99
(2) Shelf Wood Classic Lazy Susan w/ 26"–31" (660–787 mm) Telescoping Post				
4WLS072-18-52	(2) Shelf Set	18" (457 mm) Diameter	Wood	$286.99
4WLS072-20-52	(2) Shelf Set	20" (508 mm) Diameter	Wood	$315.99
4WLS072-22-52	(2) Shelf Set	22" (559 mm) Diameter	Wood	$371.99
4WLS072-28-52	(2) Shelf Set	28" (711 mm) Diameter	Wood	$457.99
4WLS072-32-52	(2) Shelf Set	32" (813 mm) Diameter	Wood	$462.99
(3) Shelf Wood Classic Lazy Susan w/ 38"-46" (965–1169 mm) Telescoping Post				
4WLS073-18-536	(3) Shelf Set	18" (457 mm) Diameter	Wood	$401.99
4WLS073-20-536	(3) Shelf Set	20" (508 mm) Diameter	Wood	$475.99

NOTE: 4WLS073-536 denotes telescoping post 9-1/4" (235 mm) upper & 36" (915 mm) lower assembly for 38"–46" (889-1092 mm) inner cabinet height wall cabinets, (3) shelves, top & bottom pivots & fasteners. Positioning base without wheels 6260-77-2 mounts on base of cabinet.

D-SHAPED SHELF



PRODUCT	DESCRIPTION	DIMS	FINISH	SLP
Wood Classic Lazy Susan - No Hardware				
4WLS201-20-52	Single Shelf	20" (508 mm) Diameter	Wood	$143.99
4WLS201-31-52	Single Shelf	31" (787 mm) Diameter	Wood	$213.99
Wood Classic Lazy Susan w/ Aluminum Bearing				
4WLS201-20-BS52	Single Shelf w/ 7" Aluminum Bearing	20" (508 mm) Diameter	Wood	$214.99
4WLS201-22-BS52	Single Shelf w/ 7" Aluminum Bearing	22" (559 mm) Diameter	Wood	$224.99
4WLS201-31-BS52	Single Shelf w/ 10" Aluminum Bearing	31" (787 mm) Diameter	Wood	$265.99
(2) Shelf Wood Classic Lazy Susan w/ 26"–32" (660–813 mm) Telescoping Post				
4WLS272-20-52	(2) Shelf Set	20" (508 mm) Diameter	Wood	$359.99
4WLS272-22-52	(2) Shelf Set	22" (559 mm) Diameter	Wood	$380.99
4WLS272-31-52	(2) Shelf Set	31" (787 mm) Diameter	Wood	$510.99
(3) Shelf Wood Classic Lazy Susan w/ 38"-46" (965–1169 mm) Telescoping Post				
4WLS273-20-536	(3) Shelf Set	20" (508 mm) Diameter	Wood	$528.99

KIDNEY-SHAPED SHELF



(Hinged door; not attached)

PRODUCT	DESCRIPTION	DIMS	FINISH	SLP
Wood Classic Lazy Susan - No Hardware				
4WLS401-24-52	Single Shelf	24" (610 mm) Diameter	Wood	$201.99
4WLS401-28-52	Single Shelf	28" (711 mm) Diameter	Wood	$206.99
4WLS401-32-52	Single Shelf	32" (813 mm) Diameter	Wood	$222.99
Wood Classic Lazy Susan w/ Aluminum Bearing				
4WLS401-28-BS52	Single Shelf w/ 7" Aluminum Bearing	28" (711 mm) Diameter	Wood	$260.99
4WLS401-32-BS52	Single Shelf w/ 10" Aluminum Bearing	32" (813 mm) Diameter	Wood	$275.99
(2) Shelf Wood Classic Lazy Susan w/ 26"–32" (660–813 mm) Telescoping Post				
4WLS472-24-52	(2) Shelf Set	24" (610 mm) Diameter	Wood	$428.99
4WLS472-28-52	(2) Shelf Set	28" (711 mm) Diameter	Wood	$440.99
4WLS472-32-52	(2) Shelf Set	32" (813 mm) Diameter	Wood	$493.99

NOTE: Positioning base with wheels 6260-95-2 mounts on base of cabinet. 24" Kidney is too small for swivel bearing w/stop hardware, therefore you must use post & pivot hardware. Bulk shelves (4WLS041) and hardware sold separately. Telescoping post assembly accommodates 26"–32" (660–813 mm) inner cabinet height, 1" (26 mm) diameter post system.

PIE-CUT SHELVES



(Attaches to the cabinet door)

PRODUCT	DESCRIPTION	DIMS	FINISH	SLP
Wood Classic Lazy Susan - No Hardware				
4WLS901-24-52	Single Shelf Drilled	24" (610 mm) Diameter	Wood	$206.99
4WLS901-28-52	Single Shelf Drilled	28" (711 mm) Diameter	Wood	$215.99
4WLS901-31-52	Single Shelf Drilled	31" (788 mm) Diameter	Wood	$245.99
(2) Shelf Wood Classic Lazy Susan w/ 26"–32" (660–813 mm) Telescoping Post				
4WLS942-2433-52	(2) Shelf Set for 33" Corner	24" (607 mm) Diameter	Wood	$440.99
4WLS942-24P-52	(2) Shelf Set	24" (607 mm) Diameter	Wood	$438.99
4WLS942-28P-52	(2) Shelf Set	28" (711 mm) Diameter	Wood	$450.99
4WLS942-31P-52	(2) Shelf Set	31" (788 mm) Diameter	Wood	$510.99

NOTES: Upper shelf is adjustable, lower shelf is in fixed position and post cannot be altered (adjustment mechanism).

HALF-MOON SHELVES



PRODUCT	DESCRIPTION	DIMS	MCO	CAB	FINISH	SLP
(2) Shelf Wood Classic Half-Moon Lazy Susans w/ Pivot and Slide						
4WLS882-32-570	(2) Shelf Set	32-1/4" (819 mm) W x 11-13/32" (290 mm) D x 15-15/16" (405 mm) H	12" (305 mm) - FF 13-1/4" (337 mm) - FL	BC42	Maple	$493.99
4WLS882-35-570	(2) Shelf Set	35" (889 mm) W x 14-13/32" (366 mm) D x 15-15/16" (405 mm) H	15" (381 mm) - FF 16-1/4" (413 mm) - FL	BC45	Maple	$579.99
4WLS882-38-570	(2) Shelf Set	37-3/4" (959 mm) W x 17-11/32" (443 mm) D x 15-15/16" (405 mm) H	18" (457 mm) - FF 19-1/4" (489 mm) - FL	BC48	Maple	$665.99

LIP SPECIFICATIONS WOOD CLASSIC SHELVES

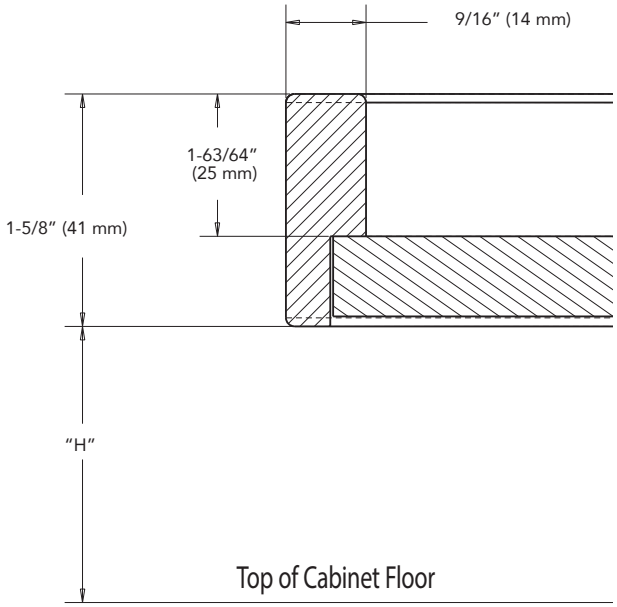

Wood Lazy Susan	
Full-Circle	**"H"**
4WLS001	3/4" (19 mm)
4WLS072	1-19/64" (33 mm)
4WLS073	1-19/64" (33 mm)
D-Shaped	**"H"**
4WLS221	1-19/64" (33 mm)
4WLS201	3/4" (19 mm)
4WLS272	1-19/64" (33 mm)
4WLS273	1-19/64" (33 mm)
Pie-Cut	**"H"**
4WLS942	1-29/64" (37 mm)
Kidney	**"H"**
4WLS401	3/4" (19 mm)
4WLS472	1-19/64" (33 mm)
Half-Moon	**"H"**
4WLS882	2-33/64" (64 mm)

Dimensions are for reference only, and may change based on hardware used, etc.

SPECIFICATIONS WOOD CLASSIC SHELVES

(Attaches to the cabinet door)

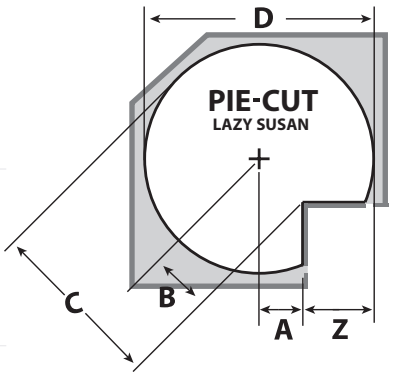

Shelf	Material	Series	A	B	C	D	Z	Post System
2433 Pie-Cut	Wood	4WLS	4-9/16"	6-7/16"	18-7/16"	24"	7-7/16" + 1/8" gap	1" DEP.
24" Pie-Cut	Wood	4WLS	1-3/8"	1-15/16"	13-15/16"	24"	10-9/16" + 1/8" gap	1" DEP.
28" Pie-Cut	Wood	4WLS	3"	4-1/4"	18-1/8"	28"	10-7/8" + 1/8" gap	1" DEP.
31" Pie-Cut	Wood	4WLS	5-1/16"	7-1/8"	22-7/16"	31"	10-5/16" + 1/8" gap	1" DEP.

DEP. = Dependently Rotating System

For custom applications, a trial installation is recommended.
Door edge profile, thickness and gaps all factor in installation.

Shelf	Material	Series	A	B	C	D	Post System
20" D-Shaped	Wood	4WLS	8-3/8"	10-5/8"	18-3/8"	20"	1" IND.
22" D-Shaped	Wood	4WLS	7-3/16"	16-5/8"	18-3/16"	22"	1" IND.
31" D-Shaped	Wood	4WLS	14"	13"	29-3/8"	31"	1" IND.

IND. = Independently Rotating System

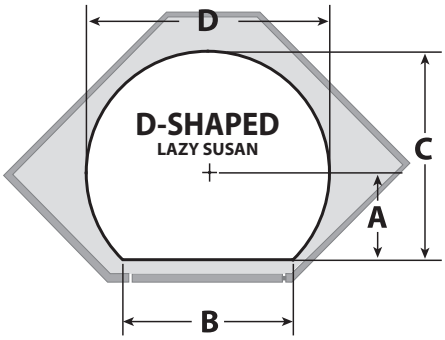

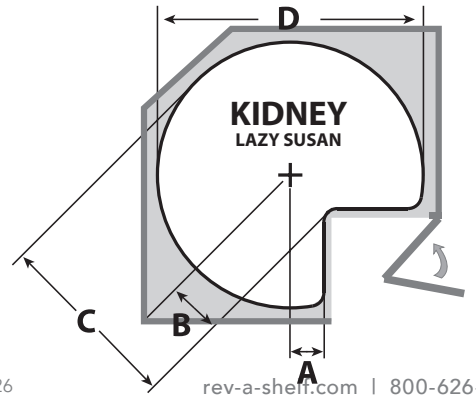

Shelf	Material	Series	A	B	C	D	Post System
24" Kidney	Wood	4WLS	1-7/16"	2-3/8"	14-3/8"	23-15/16"	1" IND.
28" Kidney	Wood	4WLS	2-7/8"	4-3/8"	18-1/4"	27-3/4"	1" IND.
32" Kidney	Wood	4WLS	4-1/16"	6"	21-15/16"	31-3/4"	1" IND.

IND. = Independently Rotating System

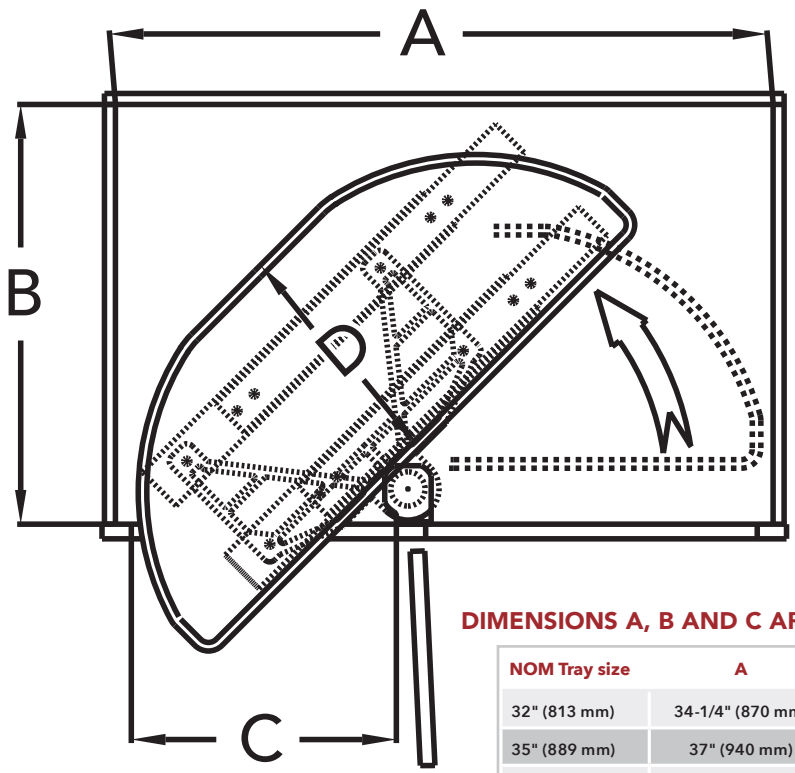

FRAMED CABINET

DIMENSIONS A, B AND C ARE MINIMUMS. 32" TRAY SHOWN IN DIAGRAM.

NOM Tray size	A	B	C	D
32" (813 mm)	34-1/4" (870 mm)	22-5/8" (575 mm)	12" (305 mm)	11-1/8" (283 mm)
35" (889 mm)	37" (940 mm)	22" (559 mm)	15" (381 mm)	14-1/8" (359 mm)
38" (965 mm)	39-1/2" (1003 mm)	22" (559 mm)	18" (457 mm)	17-1/8" (435 mm)

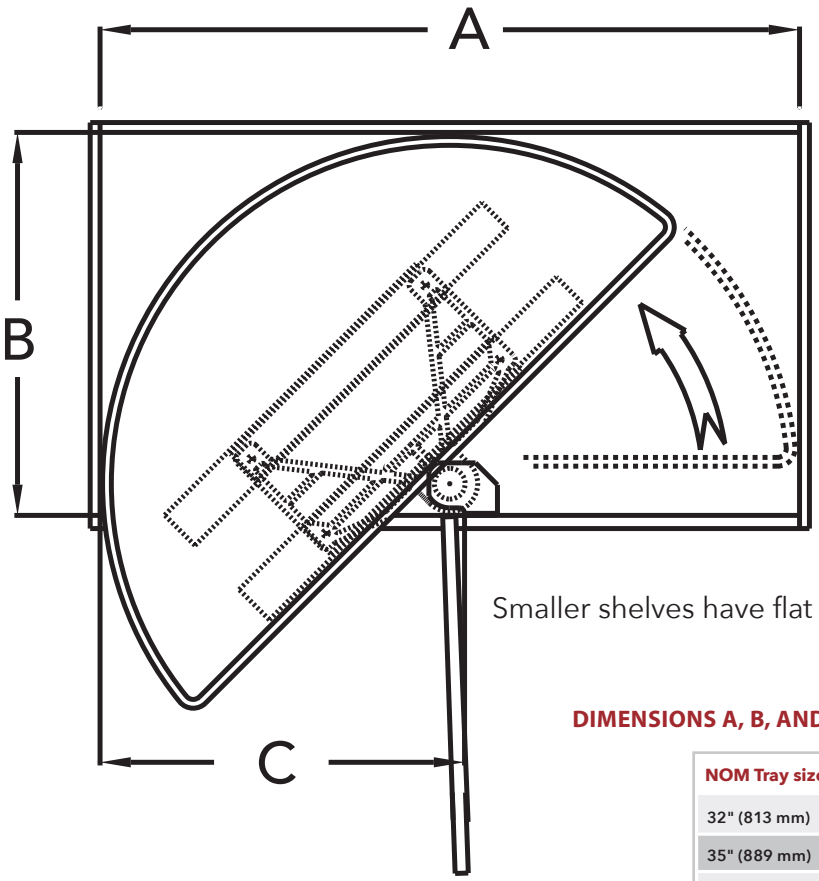

Smaller shelves have flat backs.

FRAMELESS CABINET

DIMENSIONS A, B, AND C ARE MINIMUMS. 38" TRAY SHOWN IN DIAGRAM.

NOM Tray size	A	B	C
32" (813 mm)	34-1/8" (867 mm)	22-5/8" (575 mm)	13-1/4" (337 mm)
35" (889 mm)	35-3/16" (897 mm)	22" (559 mm)	16-1/4" (413 mm)
38" (965 mm)	38-9/16" (980 mm)	22" (559 mm)	19-1/4" (489 mm)

Lazy Susan

Natural Wood

- 2-3/8" steam bent rim (3-1/4" for tall)
- 5/8" thick natural maple shelf bottom
- Chrome hardware
- Doweled (2) butt joint
- Aluminum bearings

All wood products are TSCA Title VI compliant.

Our Lazy Susans are tested to exceed BHMA Class 1 Specs: 20 lbs. per square foot at 75K cycles.

All of our lazy susans are manufactured using high-quality materials and are backed by a limited lifetime warranty. We have developed a tiered category system (Good, Better, Best) that will allow you to quickly identify which configuration will give you the features you want, with the value you require.

MADE IN THE USA

Best



Shelf Configurations

Call for Bulk Pricing 800-626-1126

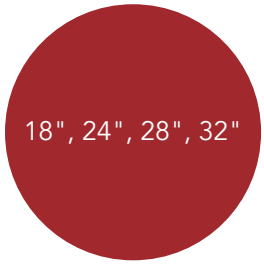

Full-Circle



D-Shaped



Kidney-Shaped

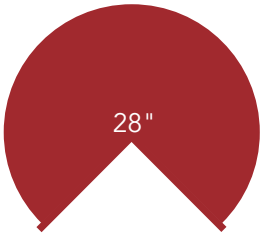

Pie-Cut



Half-Moon

See Page 337 for Hardware

FULL-CIRCLE SHELF

Natural Wood Lazy Daisy w/ Aluminum Bearing

PRODUCT	DESCRIPTION	DIMS	FINISH	SLP
LD-4NW-001-18B-1	Single Shelf w/ 7" Aluminum Bearing	18" (457 mm) Diameter	Wood	$161.99
LD-4NW-001-24B-1	Single Shelf w/ 10" Aluminum Bearing	24" (610 mm) Diameter	Wood	$230.99
LD-4NW-001-28B-1	Single Shelf w/ 10" Aluminum Bearing	28" (711 mm) Diameter	Wood	$256.99
LD-4NW-001-32B-1	Single Shelf w/ 10" Aluminum Bearing	32" (813 mm) Diameter	Wood	$303.99
(2) Shelf Natural Wood Lazy Daisy w/ 26"–32" (660–813 mm) Telescoping Post				
LD-4NW-072-18-1	(2) Shelf Set	18" (457 mm) Diameter	Wood	$281.99
LD-4NW-072-24-1	(2) Shelf Set	24" (610 mm) Diameter	Wood	$381.99
LD-4NW-072-28-1	(2) Shelf Set	28" (711 mm) Diameter	Wood	$446.99
LD-4NW-072-32-1	(2) Shelf Set	32" (813 mm) Diameter	Wood	$504.99
(3) Shelf Natural Wood Lazy Daisy w/ 38"-46" (965–1169 mm) Telescoping Post				
LD-4NW-073-1836-1	(3) Shelf Set	18" (457 mm) Diameter	Wood	$402.99

*Note: Non-drilled trays without bearings are available, remove "B" from product number.

(Attaches to the cabinet door)

PIE-CUT SHELF

(2) Shelf Natural Wood Lazy Daisy w/ 26"–32" (660–813 mm) Telescoping Post

PRODUCT	DESCRIPTION	DIMS	FINISH	SLP
LD-4NW-942-28-1	(2) Shelf Set	28" (711 mm) Diameter	Wood	$512.99

D-SHAPED SHELF

Natural Wood Lazy Daisy w/ Aluminum Bearing and Stop

PRODUCT	DESCRIPTION	DIMS	FINISH	SLP
LD-4NW-201-20BS-1	Single Shelf w/ 7" Aluminum Bearing	20" (508 mm) Diameter	Wood	$209.99
LD-4NW-201-28BS-1	Single Shelf w/ 10" Aluminum Bearing	28" (711 mm) Diameter	Wood	$264.99
LD-4NW-201-32BS-1	Single Shelf w/ 10" Aluminum Bearing	32" (813 mm) Diameter	Wood	$303.99
Tall Natural Wood Lazy Daisy w/ Aluminum Bearing and Stop				
LD-4NW-201-20TBS-1	Single Shelf w/ 7" Aluminum Bearing	20" (508 mm) Diameter	Wood	$224.99
LD-4NW-201-32TBS-1	Single Shelf w/ 10" Aluminum Bearing	32" (813 mm) Diameter	Wood	$321.99
(2) Shelf Natural Wood Lazy Daisy w/ 26"–32" (660–813 mm) Telescoping Post				
LD-4NW-272-20-1	(2) Shelf Set	20" (508 mm) Diameter	Wood	$344.99
LD-4NW-272-28-1	(2) Shelf Set	28" (711 mm) Diameter	Wood	$453.99
LD-4NW-272-32-1	(2) Shelf Set	32" (813 mm) Diameter	Wood	$517.99

HALF-MOON SHELF

Natural Wood Half Moon Lazy Susans

PRODUCT	DESCRIPTION	DIMS	MCO	CAB	FINISH	SLP
LD-4NW-882-32-1	(2) Shelf Set	32-1/8" (817 mm) W x 11-1/8" (283 mm) D x 15-15/16" (405 mm) H	12" (305 mm) - FF 13-1/4" (337 mm) - FL	BC42	Wood	$549.99
LD-4NW-882-35-1	(2) Shelf Set	34-7/8" (886 mm) W x 14-1/8" (359 mm) D x 15-15/16" (405 mm) H	15" (381 mm) - FF 16-1/4" (413 mm) - FL	BC45	Wood	$598.99
LD-4NW-882-38-1	(2) Shelf Set	38" (965 mm) W x 17-1/8" (435 mm) D x 15-15/16" (405 mm) H	18" (457 mm) - FF 19-1/4" (489 mm) - FL	BC48	Wood	$678.99

KIDNEY-SHAPED SHELF



(Hinged door; not attached)

PRODUCT	DESCRIPTION	DIMS	FINISH	SLP
Natural Wood Lazy Daisy w/ Aluminum Bearing and Stop				
LD-4NW-401-28BS-1	Single Shelf w/ 7" Aluminum Bearing	28" (711 mm) Diameter	Wood	$282.99
LD-4NW-401-32BS-1	Single Shelf w/ 10" Aluminum Bearing	32" (813 mm) Diameter	Wood	$336.99
Tall Natural Wood Lazy Daisy w/ Aluminum Bearing and Stop				
LD-4NW-401-28TBS-1	Single Shelf w/ 7" Aluminum Bearing	28" (711 mm) Diameter	Wood	$292.99
LD-4NW-401-32TBS-1	Single Shelf w/ 10" Aluminum Bearing	32" (813 mm) Diameter	Wood	$346.99
(2) Shelf Natural Wood Lazy Daisy w/ 26"–32" (660–813 mm) Telescoping Post				
LD-4NW-472-18-1	(2) Shelf Set	18" (457 mm) Diameter	Wood	$319.99
LD-4NW-472-28-1	(2) Shelf Set	28" (711 mm) Diameter	Wood	$524.99
LD-4NW-472-32-1	(2) Shelf Set	32" (813 mm) Diameter	Wood	$588.99

*Note: Non-drilled trays without bearings are available, remove "BS" from product number.

SPECIFICATIONS

NATURAL WOOD SHELVES

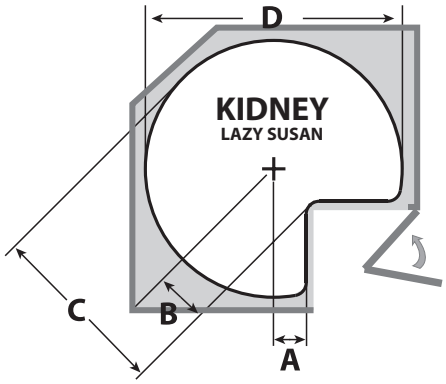

Shelf	Material	Series	A	B	C	D	Post System
18" Kidney	Maple	LD-4NW	1-7/8"	2-9/16"	11-1/2"	18"	1" IND.
24" Kidney	Maple	LD-4NW	1-7/8"	2-1/2"	11-1/2"	24"	1" IND.
28" Kidney	Maple	LD-4NW	3"	4-1/4"	18-1/8"	27-3/4"	1" IND.
32" Kidney	Maple	LD-4NW	4"	5-3/4"	21-5/8"	31-3/4"	1" IND.

IND. = Independently Rotating System

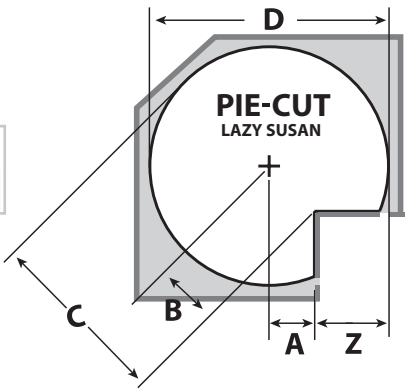

Shelf	Material	Series	A	B	C	D	Z	Post System
28" Pie-Cut	Maple	LD-4NW	3"	4-1/4"	18-1/8"	27-3/4"	10-7/8" + 1/8" gap	1" DEP.

DEP. = Dependently Rotating System

For custom applications, a trial installation is recommended.
Door edge profile, thickness and gaps all factor in installation.

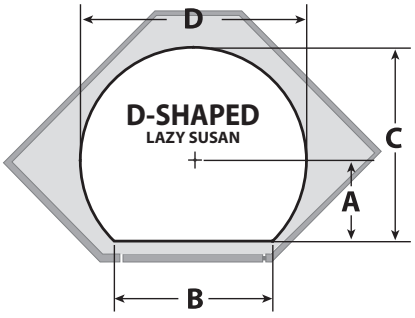

Shelf	Material	Series	A	B	C	D	Post System
20" D-Shaped	Maple	LD-4NW	8-3/8"	9-7/8"	18-1/8"	19-1/2"	1" IND.
28" D-Shaped	Maple	LD-4NW	11-7/8"	14-1/2"	25-3/4"	27-3/4"	1" IND.
32" D-Shaped	Maple	LD-4NW	13-1/2"	16-3/4"	29-3/8"	31-3/4"	1" IND.

IND. = Independently Rotating System

LIP SPECIFICATIONS NATURAL WOOD SHELVES

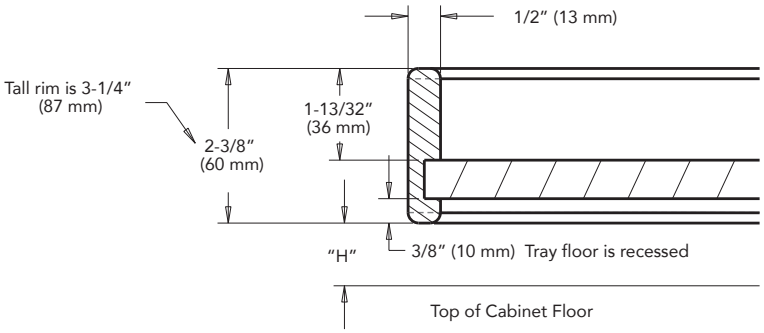

Hardware	Tray Shape	"H"
Aluminum	FC, Kidney and D-Shaped	31/32" (24 mm)
Telescoping Post	Full-Circle	7/8" (22 mm)
Telescoping Post	Kidney & D-Shaped	31/32" (24 mm)
Telescoping Post	Pie-Cut	1-3/4" (45 mm)

SPECIFICATIONS HALF-MOON NATURAL WOOD SHELVES

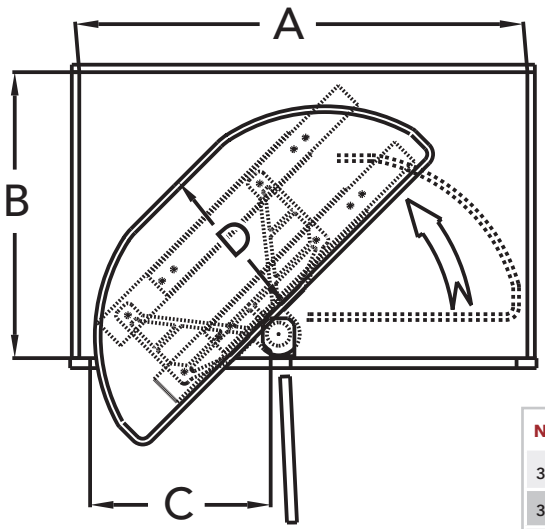

STANDARD AND 90-DEGREE BRACKETS COME WITH EACH UNIT

FRAMED CABINET

DIMENSIONS A, B AND C ARE MINIMUMS. 32" TRAY SHOWN IN DIAGRAM.

NOM Tray size	A	B	C	D
32" (813 mm)	34-1/4" (870 mm)	22" (559 mm)	12" (305 mm)	11-1/8" (283 mm)
35" (889 mm)	37" (940 mm)	22" (559 mm)	15" (381 mm)	14-1/8" (359 mm)
38" (965 mm)	39-1/2" (1003 mm)	22" (559 mm)	18" (457 mm)	17-1/8" (435 mm)

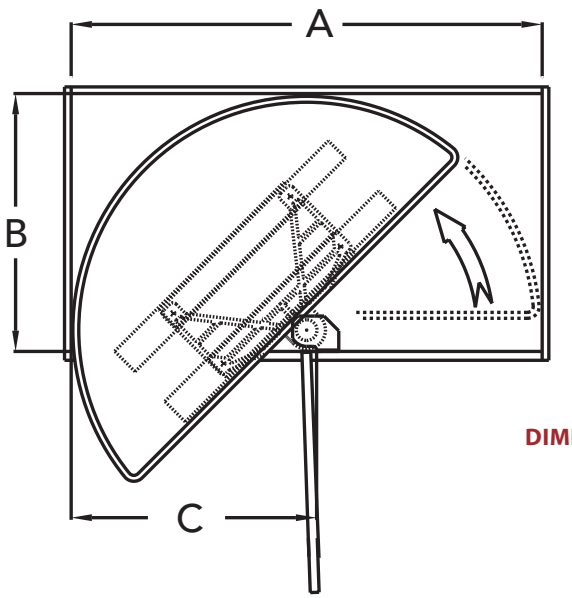

STANDARD AND 90-DEGREE BRACKETS COME WITH EACH UNIT

FRAMELESS CABINET

DIMENSIONS A, B AND C ARE MINIMUMS. 38" TRAY SHOWN IN DIAGRAM.

NOM Tray size	A	B	C
32" (813 mm)	34-1/8" (867 mm)	22" (559 mm)	13-1/4" (387 mm)
35" (889 mm)	35-3/16" (897 mm)	22" (559 mm)	16-1/4" (413 mm)
38" (965 mm)	38-9/16" (980 mm)	22" (559 mm)	19-1/4" (489 mm)

Lazy Susan

Solid Bottom Kidney



53-401-28BSMP-1 (two units shown)

- Designed for 36″ kidney corner base cabinets
- Gray, maple or orion gray solid bottom shelves
- Single shelf set features aluminum swivel bearing with stop
- Double shelf set features independently rotating hardware and chrome-plated telescoping posts, which accommodates 26″ to 32″ inner cabinet heights
- TSCA Title VI compliant



53-401-32BSFOG-1
(2) Shelf 36" Kidney-Shaped
Lazy Susan
(Orion Gray finish shown)



53472-32MP-1
(2) Shelf 36" Kidney-Shaped
Lazy Susan
(Maple finish shown)

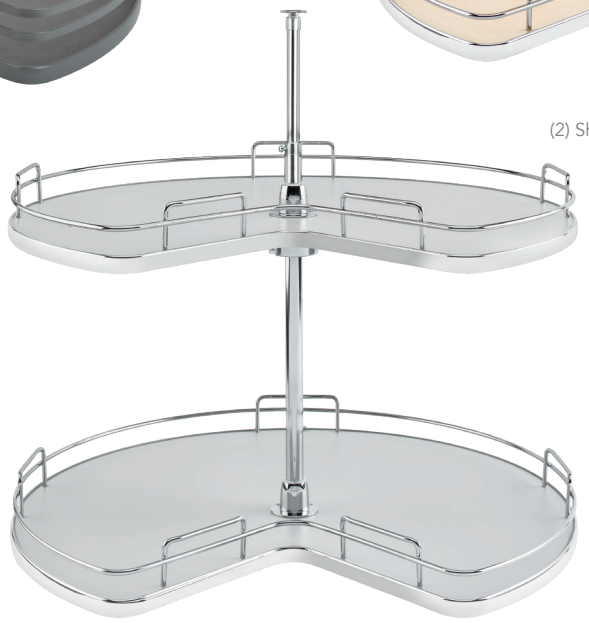

53472-32GR-1
(2) Shelf 36" Kidney-Shaped
Lazy Susan
(Gray finish shown)

PRODUCT	DESCRIPTION	DIMS	FINISH	SLP
Solid Bottom Kidney-Shaped Lazy Susans w/ 10" Aluminum Bearing for 36" Kidney Cabinets				
53-401-28BSGR-1	Single Shelf	28" (711 mm) Diameter	Maple	$270.99
53-401-28BSMP-1	Single Shelf	28" (711 mm) Diameter	Gray	$270.99
53-401-28BSFOG-1	Single Shelf	28" (711 mm) Diameter	Orion Gray	$301.99
Solid Bottom Kidney-Shaped Lazy Susans w/ 10" Aluminum Bearing for 36" Kidney Cabinets				
53-401-32BSGR-1	Single Shelf	32" (813 mm) Diameter	Gray	$285.99
53-401-32BSMP-1	Single Shelf	32" (813 mm) Diameter	Maple	$285.99
53-401-32BSFOG-1	Single Shelf	32" (813 mm) Diameter	Orion Gray	$317.99
(2) Shelf Solid Bottom Kidney-Shaped Lazy Susans for 28" Kidney Cabinets				
53472-28GR-1	(2) Shelf Set	28" (711 mm) Diameter	Gray	$446.99
53472-28MP-1	(2) Shelf Set	28" (711 mm) Diameter	Maple	$446.99
53472-28FOG-1	(2) Shelf Set	28" (711 mm) Diameter	Orion Gray	$473.99
(2) Shelf Solid Bottom Kidney-Shaped Lazy Susans for 36" Kidney Cabinets				
53472-32GR-1	(2) Shelf Set	32" (813 mm) Diameter	Gray	$472.99
53472-32MP-1	(2) Shelf Set	32" (813 mm) Diameter	Maple	$472.99
53472-32FOG-1	(2) Shelf Set	32" (813 mm) Diameter	Orion Gray	$495.99

5LSF Series

Chrome Fence Railing

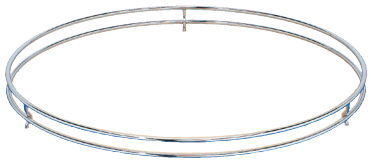

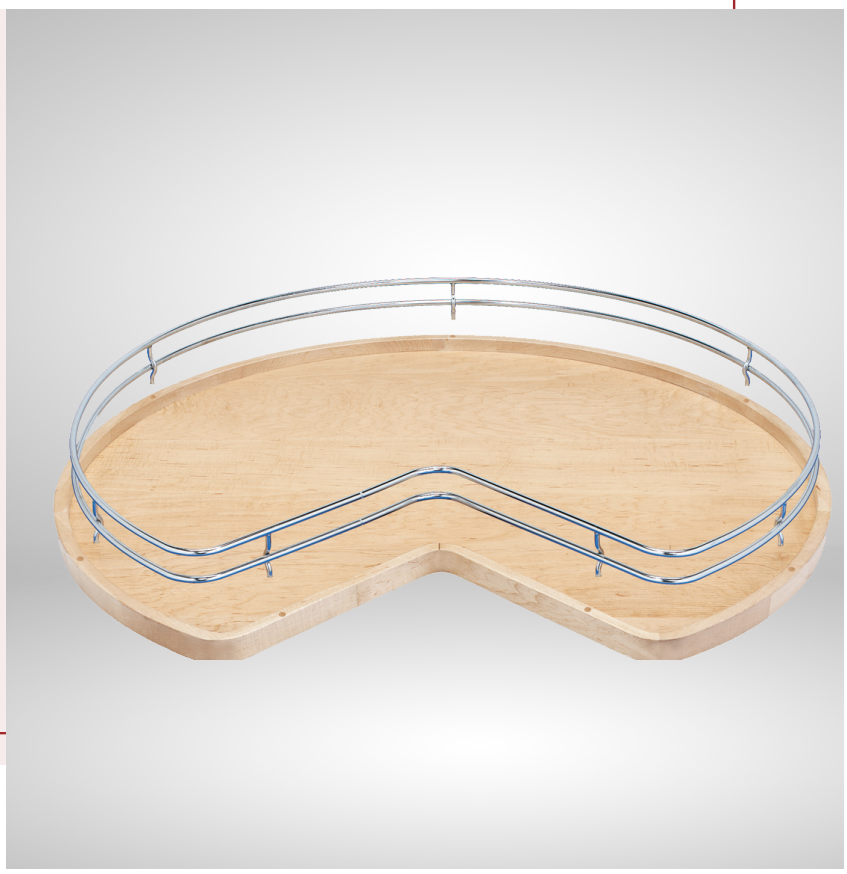

Full-Circle Fence Rail				
PRODUCT	DESCRIPTION	DIMS	FINISH	SLP
5LSF018-CR	Fence Railing	18" (457 mm) Diameter	Chrome	$51.99
5LSF020-CR	Fence Railing	20" (508 mm) Diameter	Chrome	$55.99
5LSF028-CR	Fence Railing	28" (711 mm) Diameter	Chrome	$82.99
5LSF032-CR	Fence Railing	32" (813 mm) Diameter	Chrome	$90.99
Full-Circle Fence Rail				
5LSF018-8CR	(8) Fence Railings	18" (457 mm) Diameter	Chrome	$50.99 ea.
5LSF020-8CR	(8) Fence Railings	20" (508 mm) Diameter	Chrome	$52.99 ea.
5LSF032-8CR	(8) Fence Railings	32" (813 mm) Diameter	Chrome	$84.99 ea.
Kidney-Shaped Fence Rail				
5LSF424-CR	Fence Railing	24" (310 mm) Diameter	Chrome	$85.99
5LSF428-CR	Fence Railing	28" (711 mm) Diameter	Chrome	$97.99
5LSF432-CR	Fence Railing	32" (813 mm) Diameter	Chrome	$102.99
Kidney-Shaped Fence Rail				
5LSF428-8CR	(8) Fence Railings	28" (711 mm) Diameter	Chrome	$85.99 ea.
5LSF432-8CR	(8) Fence Railings	32" (813 mm) Diameter	Chrome	$93.99 ea.

Not-So-Lazy Susan



NSLS-KM-28S-7

- Designed for 33" and 36" kidney corner base cabinets
- Solid wood construction, maple
- Mounts to cabinet top and bottom
- Upper kidney-shaped shelf with mid-level arrester
- Lower kidney-shaped shelf
- Up to (7) hooks
- 154 lb. dynamic weight rating
- TSCA Title VI compliant



(7) Adjustable hooks



Built-in positioner stop



NSLS-KM-28S-7
Not-So-Lazy Susan
(28" version shown)

Not-So-Lazy-Susan w/ Hardware and Hooks

PRODUCT	DESCRIPTION	DIMS	FINISH	SLP
NSLS-KM-28S-7	Single Shelf	28" (711 mm) Diameter	Wood	$492.99
NSLS-KM-32S-7	Single Shelf	32" (813 mm) Diameter	Wood	$530.99


Innovation through Organization™

Rev-A-Shelf® Hardware Kits for wood or melamine custom shelving are tested to meet and exceed BHMA Class-I specifications of 20 lbs. per square foot at 100,000 cycles. Our hardware and hardware components allow maximum flexibility, strength and aesthetic value for all custom applications.













PRODUCT	DESCRIPTION	DIMS	FINISH	SLP
Shelf Support for Full-Circle Shelves				
6000-07P-52	Shelf Support	18" (457 mm) Diameter	Polymer	$19.99
Center Post Adapter for Extending				
6000-37-52	Post Adapter	20" (508 mm) Diameter	Metal	$28.99
3/4" Diameter Lower Post Assembly				
6020-96-3100-2	31" Post (787 mm)	28" (711 mm) Diameter	Bright Zinc	$23.50
6020-96-3600-2	36" Post (915 mm)	32" (813 mm) Diameter	Bright Zinc	$29.85
6000-05-7200-2-52	72" Post (1829 mm)	18" (457 mm) Diameter	Bright Zinc	$74.99
(2 Shelf) Full Circle Hardware Set for Custom Shelves				
6020-04P-52	Hardware	20" (508 mm) Diameter	Polymer	$59.99
(2 Shelf) Full Circle Hardware Set for Custom Shelves				
6020-04P-4	(6) Hardware Sets	3/4" Diameter Post (19 mm)	Polymer	$50.99 ea.
6020-04P-426	(6) Hardware Sets	38"-46" (914 mm-1168 mm) H – 3/4" (19 mm) Diameter Post	Polymer	$57.99 ea.
Full Circle Hardware Set for Rev-A-Shelf Polymer Shelves				
6022-04-52	Hardware	3/4" Diameter Post (19 mm)	Bright Zinc	$47.99
6022-04-52-526	Hardware	38"-46" (914 mm-1168 mm) H – 3/4" (19 mm) Diameter Post	Bright Zinc	$50.99
Full Circle Hardware Set for Rev-A-Shelf Polymer Shelves				
6022-04-4	(6) Hardware Sets	3/4" Diameter Post (19 mm)	Bright Zinc	$38.99 ea.
6022-04-426	(4) Hardware Sets	38"-46" (914 mm-1168 mm) H – 3/4" (19 mm) Diameter Post	Bright Zinc	$40.99 e.
Full Circle Hardware Set/Independently Rotating				
6072-04-52	(2) Shelf Full Circle Hardware Set	1" Diameter Post (26 mm)	Chrome	$119.99
6073-04-536	(3) Shelf Full Circle Hardware Set	38"-46" (914 mm-1168 mm) H – 1" (26 mm) Diameter Post	Chrome	$185.99

NOTES: 6000-07/P 5" (127 mm) DIAMETER SHELF SUPPORT FOR WOOD SHELVES (USE 6020/6022 SERIES HARDWARE KITS.)

6000-37 For joining two or more center posts together. (3/4" (19 mm) post diameter only) (6000 Series) 6020-96-3600 / 6000-05-7200 For use with full circle dependently rotating sets. 36" post for use in 36" & 42" (915-1067 mm) wall cabinet applications. 72" post for use with custom applications.

6020P For use with wood or laminate custom shelves.

6072 For use with independently rotating non-centering wood shelves.

CONTAINS: 6020 Top and bottom pivots 6000-90-2; post assembly 6020-97-2100-2; upper post assembly 6120-93-1200-2; collar assembly 6120-92-2; two full circle shelf supports 6000-07, and mounting screws.

6022 Top and bottom pivots 6000-90-2; 21" post assembly 6020-97-2100-2; 12" post assembly 6120-93-1200-2; collar assembly 6120-92-2; and mounting screws.

6072 (2) shelf hubs 6260-08-26; (2) shelf supports 6470-07-2; (1) collar 6260-92-26; (1) upper pivot 6000-91-2; (1) positioning base 6260-77-2; 22-1/2" (572 mm) lower post assembly 6470-96-2208-26; 9-1/4" (235 mm) upper post assembly (6470-93-0904-26) and mounting screws.

Hardware



4HDBM2-04-52



BM1-VL-4-SHUB-12



4B-10-8

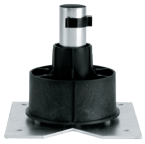

BM1-VL-4-LHUB-12



4BS-7-8



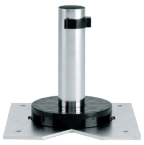

BM1-VL-04-52



BM1-04-52

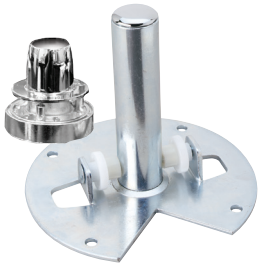

4BM1-04-52



4BM1-18-52

BM1-18-52

Single Tray Hardware				
PRODUCT	DESCRIPTION	DIMS	FINISH	SLP
BM1-VL-04-52	Value Line Single Tray Bottom Mount Post	4" (102 mm) Post	Zinc Coated	$27.99
BM1-VL-4-SHUB-12	(12) Bottom Mount Hardware Sets w/ Wall Hub	4" (102 mm) Post	Zinc Coated	$25.99 ea.
BM1-VL-4-LHUB-12	(12) Bottom Mount Hardware Sets w/ Base Hub	4" (102 mm) Post	Zinc Coated	$24.99 ea.
BM1-04-52	Single Tray Bottom Mount Post	4" (102 mm) Post	Zinc Coated	$34.99
4BM1-04-52	Wood Single Tray Bottom Mount Post	4" (102 mm) Post	Zinc Coated	$40.99
Aluminum Lazy Susan Swivel Bearing w/ Stop				
4BS-7-8	(8) 7" Bearings		Aluminum	$57.99 ea.
4BS-10-8	(8) 10" Bearings		Aluminum	$64.99 ea.
Aluminum Lazy Susan Bearing				
4B-7-8	(8) 7" Bearings		Aluminum	$48.99 ea.
4B-10-8	(8) 10" Bearings		Aluminum	$54.99 ea.
(2) Shelf Lazy Susan Post Hardware				
BM1-18-52	Two Tray Bottom Mount Post	18" (457 mm) Post	Zinc Coated	$53.99
4BM1-18-52	Wood Two Tray Bottom Mount Post	18" (457 mm) Post	Zinc Coated	$87.99
4HDBM2-04-52	Heavy Duty Two Tray Bottom Mount Post	18" (457 mm) Post	Almond Powder Coated	$85.99



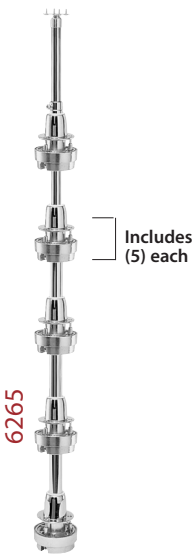









PRODUCT	DESCRIPTION	DIMS	FINISH	SLP
(2) Shelf Independently Rotating Centering Hardware for Wood Kidney/D-Shaped Trays				
6272-04-52	Hardware	26"–32" (661–813 mm) I.C.H. 1" (26 mm) Diameter Post	Chrome	$140.99
(5) Shelf Utility Cabinet Centering Hardware for RAS Polymer Kidney/D-Shaped Trays				
6265-04-52	Hardware	56"–62" (1423–1575 mm) I.C.H. 1" (26 mm) Diameter Post	Chrome	$282.99
1" Diameter Lower Post Assembly				
6360-05-7008-26-52	Post Extension	70-1/2" (1791 mm) Post 1" (26 mm) Diameter	Chrome	$92.99
6370-96-7008-26-52	1" Center Post Extension	70-1/2" (1791 mm) Post 1" (26 mm) Diameter	Chrome	$95.99
6470-96-4008-26-52	1" Center Post Extension	1" (26 mm) x 40-1/2" (1029 mm) Post	Chrome	$56.99
Pie-Cut Hardware for Wood Shelves w/ Polymer Shelf Supports (24" or larger - custom trays)				
6940-04-28P-52	Hardware Sets	3/4" (19 mm) Diameter Post	Bright Zinc/Chrome	$95.99
Pie-Cut Hardware for Wood Shelves w/ Polymer Shelf Supports (24" or larger)				
6940-04-28P-4	(6) Hardware Sets	3/4" (19 mm) Diameter Posts	Bright Zinc	$87.99 ea.
Center Post & Pivot Hardware for RAS Polymer Shelves (Individual Pack)				
6942-04-28-52	Hardware		Bright Zinc	$84.99
Shelf Supports for Pie-Cut Hardware for Wood Shelves				
6950-07P-52	Shelf Support	1" (26 mm) Diameter Post	Polymer	$16.99

NOTES: 6272-04-52 For use with independently rotating centering shelves.

6265-04-52 For use with independently rotating centering shelves.

6360/6370 For use with independent rotating tray kits or hardware kits. Distributor post for use when needing longer post for pantry or kidney independently rotating hardware sets. Must be used with bushing supplied by factory or with extending collar 6260-38-26.

6940-04-28/P Replaces part number 6120-04 for 24", 28", (610, 711 mm) or larger wood shelves only.

6942-04-52 Replaces part number 6122-04-52 for 24" or 28" (610, 711 mm), shelves only. Not for use with 18", 20" or 22" shelves. (Contains large cam base) 1" (26 mm) dia. post.

CONTAINS: 6272-04-52 2 Shelf support assemblies, mounting hardware and telescoping center post assembly to accommodate 26"-32" (661-813 mm) I.C.H. 1" (26 mm) dia. post.

6265-04-52 Hardware for 5 shelf set with 56"-62" (1423-1575mm) I.C.H. post system. 1" (26 mm) dia. post.

Hardware

LAZY DAISY® BY REV-A-SHELF®


LD-4BW-004


4SBS


LD-24BM2


LD-24BM1


LD-24

Lazy Daisy Banded Wood Hardware			
PRODUCT	DESCRIPTION DIMS	FINISH	SLP
LD-4BW-00436-4	(4) Hardware for Banded Wood Full-Circle 3 Tray Set w/ 38"–46" (965 - 1168 mm) Telescoping Posts	Zinc/Almond	$74.99 ea.
LD-4BW-004-4	(4) Hardware for Banded Wood Full-Circle w/ 26"–31" (660 - 787 mm) Telescoping Posts	Zinc/Almond	$45.99 ea.
LD-4BW-20436-4	(4) Hardware for Banded Wood D-Shaped 3 Tray w/ 38"–46" (965 - 1168 mm) Telescoping Posts	Zinc/Almond	$63.99 ea.
LD-4BW-204-4	(4) Hardware for Banded Wood D-Shaped w/ 26"–31" (660 - 787 mm) Telescoping Posts	Zinc/Almond	$45.99 ea,
LD-4BW-404-4	(4) Hardware for Banded Wood Kidney w/ 26"–31" (660 - 787 mm) Telescoping Posts	Zinc/Almond	$44.99 ea.
Lazy Daisy Banded Wood Hardware			
4SB-7-1	7" Lazy Susan Steel Swivel Bearing	Steel	$19.99
4SB-7-10	(10) 7" Lazy Susan Steel Swivel Bearings	Steel	$14.99 ea.
4SB-10-1	10" Lazy Susan Steel Swivel Bearing	Steel	$26.99
4SB-10-10	(10) 10" Lazy Susan Steel Swivel Bearings	Steel	$16.99 ea.
4SBS-7-1	7" Lazy Susan Steel Swivel Bearing With Stop	Steel	$22.99
4SBS-7-10	(10) 7" Lazy Susan Steel Swivel Bearings w/ Stop	Steel	$17.99 ea.
4SBS-10-1	10" Lazy Susan Steel Swivel Bearing w/ Stop	Steel	$29.99
Lazy Daisy Polymer Hardware			
LD-20-0431-5	(5) Hardware for Polymer Full-Circle, Kidney, D-Shaped w/ 30-35" (762 - 889 mm) Telescoping Posts	Zinc/White	$38.99 ea.
LD-24-0436-5	(5) Hardware for Polymer Kidney 3 Tray w/ 34-41" (863 - 1041 mm) Telescoping Posts	Zinc/White	$43.99 ea.
LD-24-04-5	(5) Hardware for Polymer Kidney w/ 26-31" (660 - 787 mm) Telescoping Posts	Zinc/White	$25.99 ea.
LD-24BM1-04-10	(10) Hardware for Polymer Kidney Single Bottom-Mounts	Zinc/White	$17.99 ea.
LD-24BM2-04-5	(5) Hardware for Polymer Kidney Double Bottom-Mounts	Zinc/White	$21.99 ea.



6882-1008-04-52
Half-Moon Extension Slide Kit



6841 Rev-A-Tray Half-Moon Hardware Kit



6842-04 Half-Moon (2) Shelf Hardware Kit

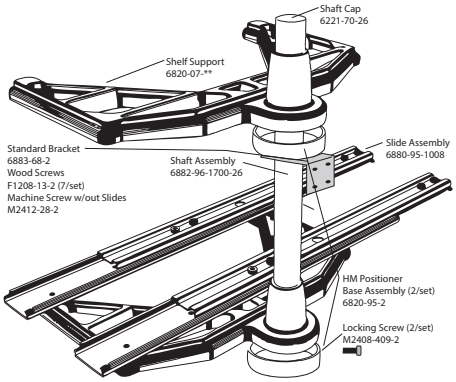

Half-Moon Hardware Kit (Individual Pack)

PRODUCT	DESCRIPTION	DIMS	FINISH	SLP
6841-04-52	Single Rev-A-Tray Hardware Kit		Metal	$95.99
6842-04-570	(2) Shelf Hardware Kit without Slides		Metal	$205.99
6882-1008-04-52	Extension Slide Kit	10-1/2" (267 mm) Extension	Metal	$66.99
6882-04-52	(2) Shelf Hardware Kit with Slides		Metal	$298.99

CONTAINS:
6842-04-570 Two (2) shelf supports 6820-02-**FR; (2) positioning bases (6820-95-2); 1 standard bracket (6883-68-2); 15-7/8" (404 mm) 680 post (6882-96-1514-26)—Also includes template and installation instructions.
6882-1008-04-52 Slide kit only. (1) pair with screws. Individually packaged. Note: ** denotes color choice 11 - white 13- for almond

JPE SERIES POLYMER COMPONENT PARTS BULK

Rev-A-Shelf® custom molds many component parts for the cabinet industry, furniture industry and many other industries. We utilize high-quality, engineering-grade polymer materials such as ABS for our shelf clips. Should you require any custom polymer component parts, please contact customer service.

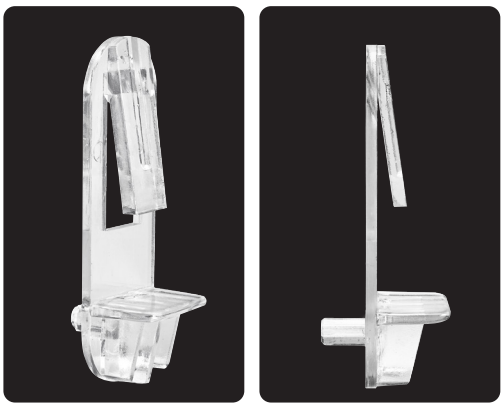

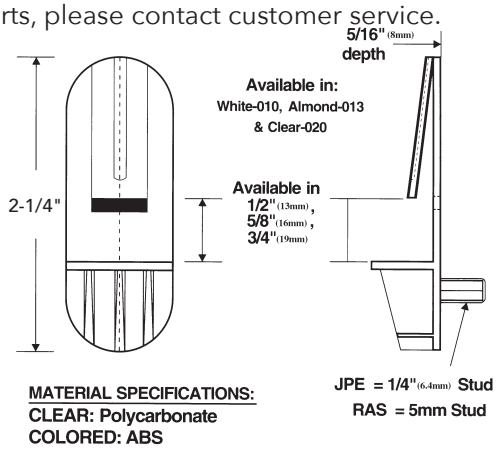

1/4" Boss Polymer Locking Shelf Clips (Bulk Pack)

PRODUCT	DESCRIPTION	DIMS	FINISH	SLP
JPE 301-12-020-1	Shelf Locking Clip	1/2" (13 mm)	Clear	$.20 ea.
JPE 301-34-0**-1	Shelf Locking Clip	3/4" (19 mm)	White or Clear	$.20 ea.
JPE 301-58-0**-1	Shelf Locking Clip	5/8" (16 mm)	White or Clear	$.20 ea.
RAS SERIES–5MM Boss Polymer Locking Shelf Clips (Bulk Pack)				
RAS 305-12-0**-1	Shelf Locking Clip	1/2" (13 mm)	White or Clear	$.20 ea.
RAS 305-34-0**-1	Shelf Locking Clip	3/4" (19 mm)	White or Clear	$.20 ea.
RAS 305-58-0**-1	Shelf Locking Clip	5/8" (16 mm)	White or Clear	$.20 ea.

NOTES:
JPE 301/RAS 305 **Denotes: White - 010 or Clear - 020 clear polycarbonate

SPECIFICATIONS

HARDWARE PART IDENTIFICATION

6940 SERIES PIE-CUT

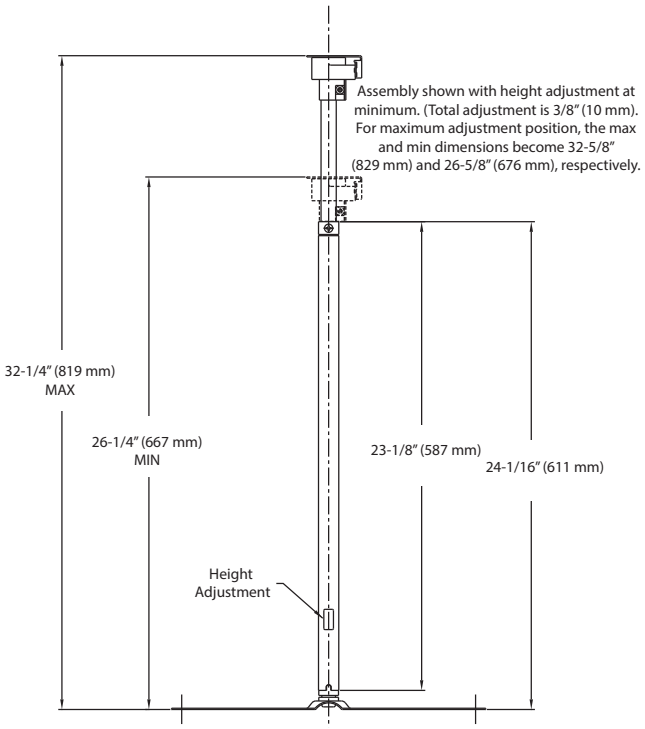

FULL-CIRCLE - Dependent Rotating

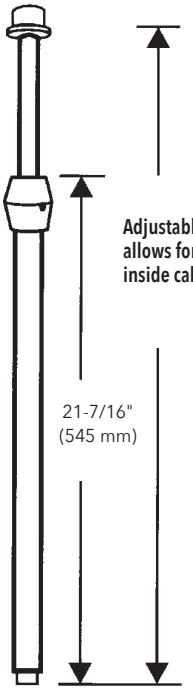

- Standard post for **6012, 2012** polymer lazy susans sets and **6022** hardware only sets.

- **6013-**-**-526** series sets have a **36"** (915 mm) base shaft and adjust up to **46"** (1169 mm). Shaft can be cut for shorter height requirements, but polymer bushing must be re-inserted in bottom of shaft.

NOTE: Order part # 6000-05-7200-2 for 72" (1829 mm) cut-to-size post.

FULL-CIRCLE/KIDNEY
Independently Rotating

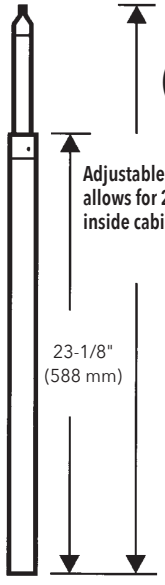

- Standard post for **6472, 2472,4472, 4WLS** Kidney, **2072, 6072** Full-Circle and **6272, 4272** D-Shaped Lazy Susan sets.

- Shaft can be cut to shorter height requirements

NOTE: Order part # 6370-96-7008-26 for 70-1/2" (1791 mm) cut-to-size post w/ bushings.

Hardware for Lazy Daisy Polymer

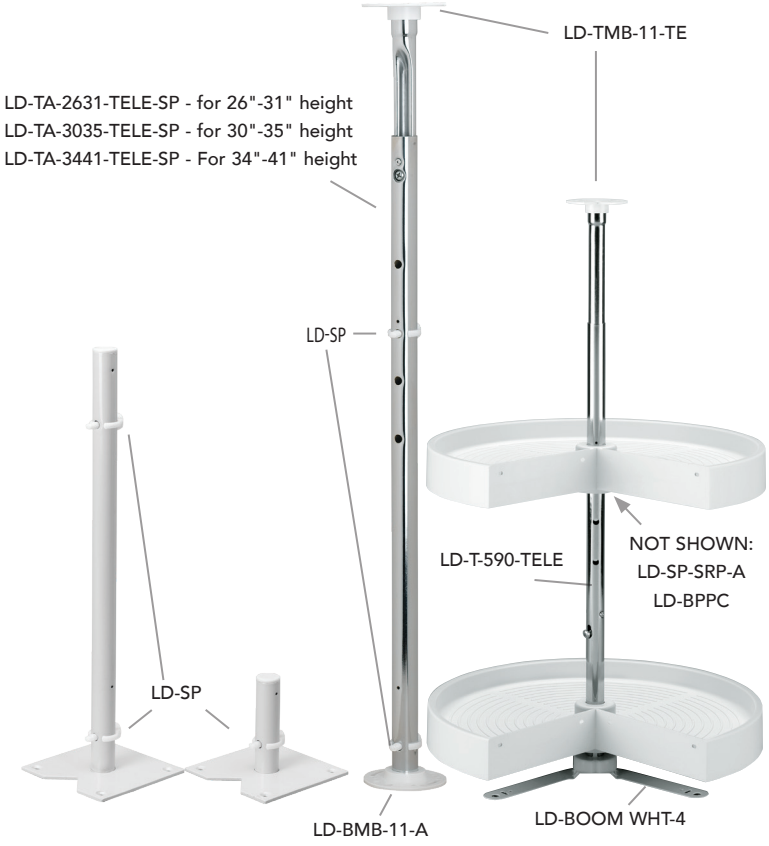

SPECIFICATIONS

HARDWARE KIT PARTS LIST

Hardware for Value Line Trays

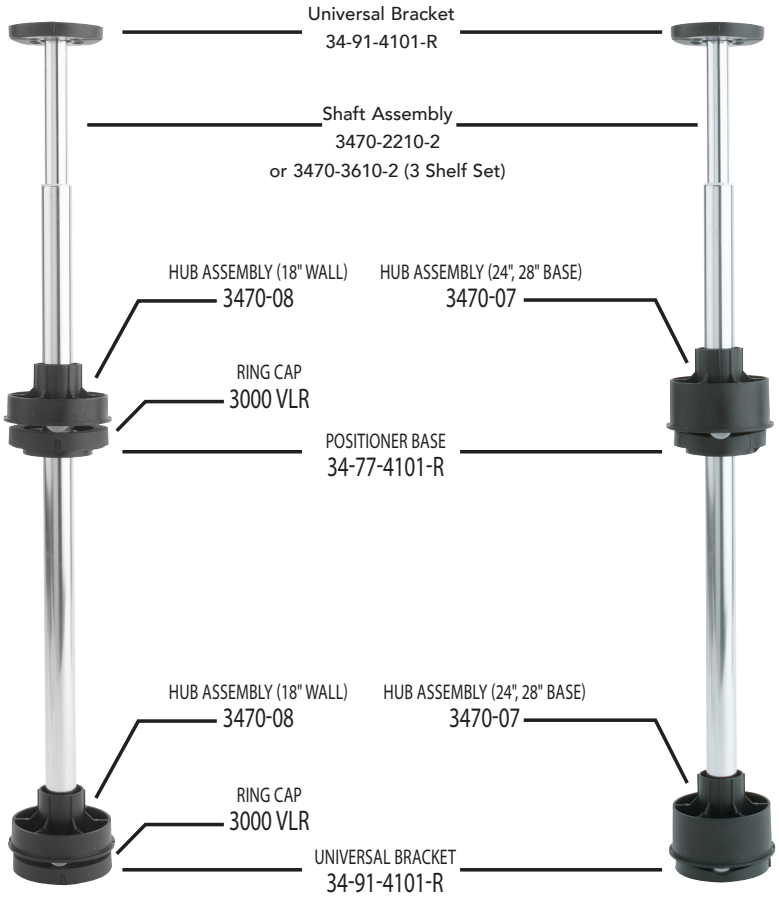

18"/20" FULL CIRCLE HARDWARE

24"/28"/32" FULL CIRCLE/KIDNEY HARDWARE

Hardware for LD Banded Wood

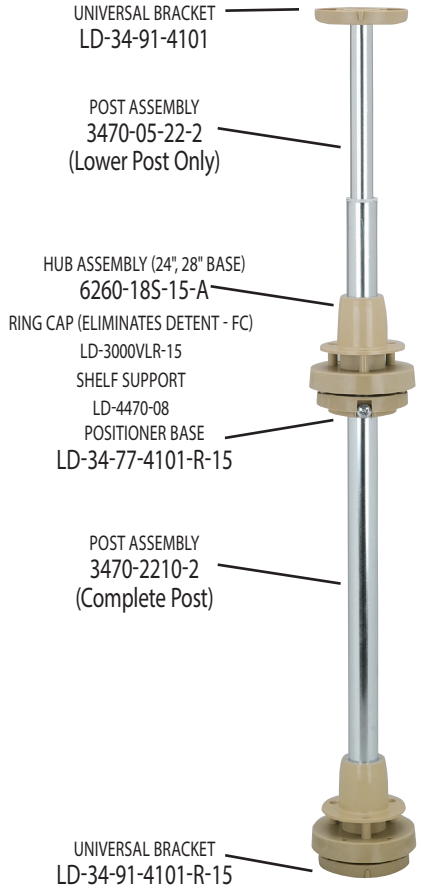

Hardware for RAS Polymer Trays

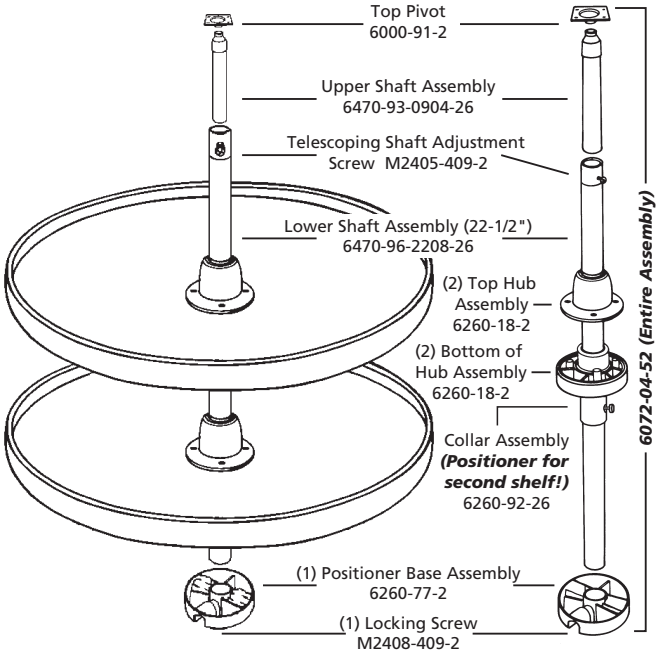

Hardware for 4WLS/LD-NATURAL

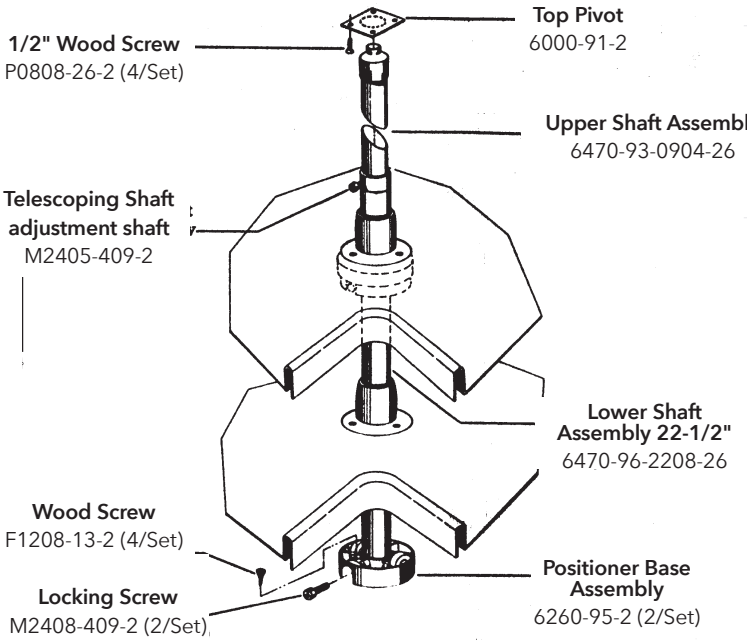

SPECIFICATIONS

HARDWARE KIT PARTS LIST

DEPENDENTLY ROTATING

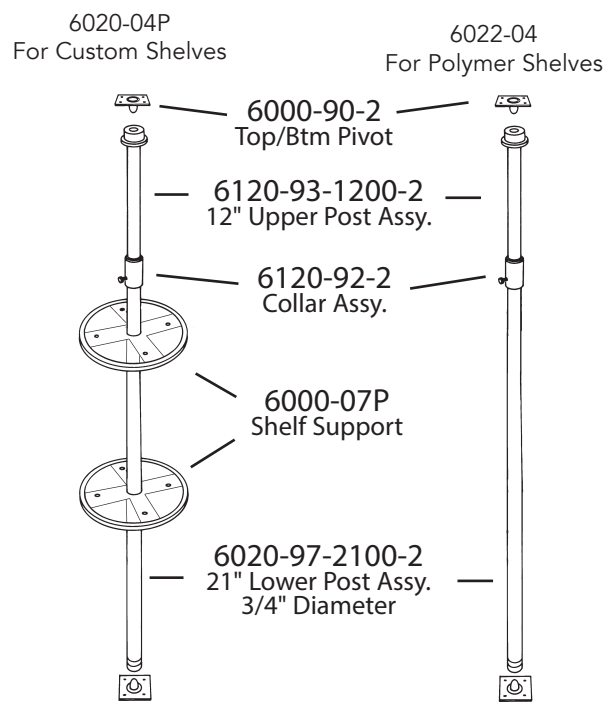

Dependently Rotating Hardware
Extension: 24"–31" (610–788 mm)

INDEPENDENTLY ROTATING

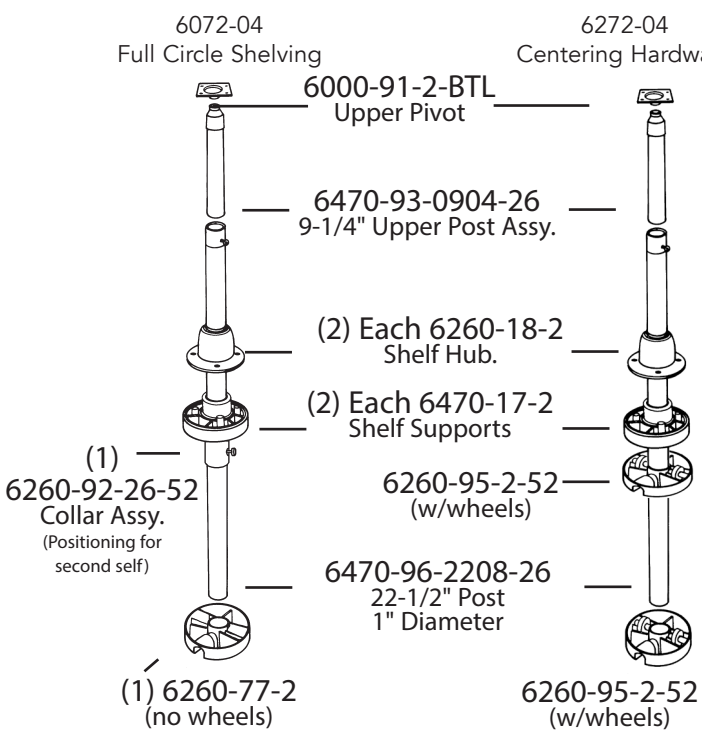

Independently Rotating Hardware
Extension: 26"–32" (661 mm–813 mm)

UTILITY CABINET CENTERING

6265-04

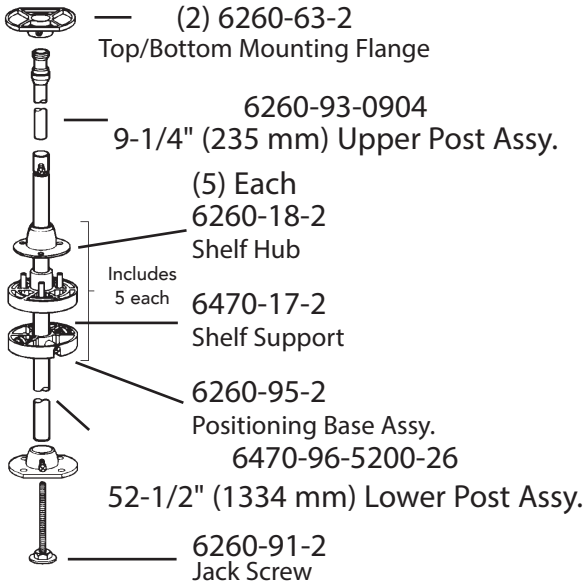

Independently Rotating Hardware
1" (26 mm) diameter post system
Std. Extension: 56"–62" (1423–1575 mm)

PIE CUT

6940-04 For Custom Shelves
6942-04 For Polymer Shelves

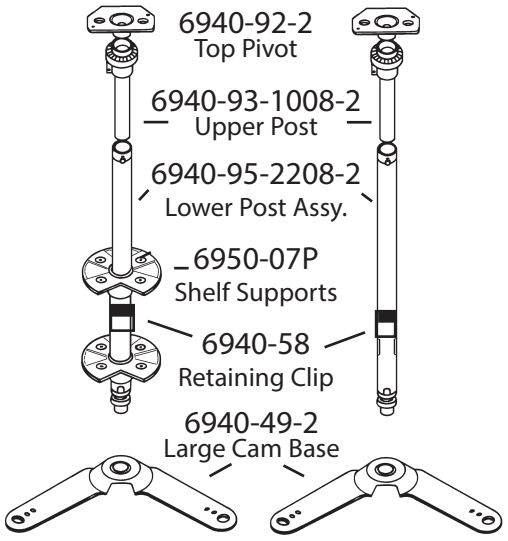

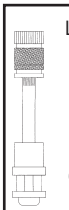

Lower Post Adjustment Assy.
Part #6940-91-52
Inserts into bottom end of 6940-95-2208-2 Lower Post Assy.

Note: For 24" (610 mm) or larger diameter shelves
Extension: 26"–32" (661–813 mm)
1" (26 mm) diameter post system







LED LIGHTING SOLUTIONS

ILLUMINATE **WITH PURPOSE**

Enhance the appearance and functionality of your home or business with energy efficient, low-heat producing, long-life LED lighting fixtures by Tresco Lighting®. Whether you're in the kitchen, millwork, office, laboratory, hospitality, furniture or store fixture industry, you're sure to find a lighting solution in our extensive catalog of options. A leader in easy-to-install LED lighting, we offer a wide array of puck lights, flexible lights, linear lights, and more. We also feature an array of controllers and dimmers, allowing you to tailor the atmosphere of your space. Have a custom application? From art to part, Tresco will design and manufacture a lighting solution based on your specific needs.

PROP 65 WARNING FOR CALIFORNIA RESIDENTS

WARNING: These products can expose you to chemicals such as formaldehyde, lead or styrene, which are known to the State of California to cause cancer and birth defects or other reproductive harm. For more information go to www.P65Warnings.ca.gov

tresco® lighting

REV-A-SHELF®





We are leading the transformation to low-voltage solutions in retail, hospitality, and residential environments with innovative power and control systems that easily connect with components to enhance our lives.

Our products simply and intuitively work.

Understanding Color Temperature

Color temperature is the rating a particular color renders on the Kelvin scale. These color temperatures alter how an object or room is perceived when illuminated and Tresco® offers a wide range to choose from. To find the appropriate color temperature for your application, please reference the table below:



2700K	3000K	3500K	4800K	5000K	6500K

WARM — NEUTRAL — COOL









Flexible Lights

With our FlexTape® or flexible silicone lighting, you can have the flexibility you need without sacrificing the quality you demand. Whether backlighting a sign, edge lighting a display, or accent lighting Air Force One, Tresco®'s line of flexible lights are all you need.



Puck Lighting

Our OptiPockit and legacy puck lights are available in a variety of configurations. Whether recessed or surface-mounted, linkable or non-linkable, Tresco® has the perfect puck for you.

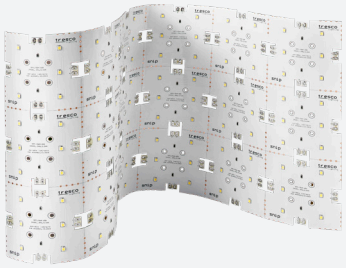

Panel Lighting

Take your designs to new levels with panel lighting. From countertops and shelves to artwork and signs, backlighting provides both decorative and utility lighting in one application.

Layout Design Services

Visit
trescolighting.com/layout

Fill out the form and upload your drawings

Receive your professionally engineered schematic and matching parts list

Try our new Lighting Product Configurator - This service will guide you through selecting the lighting and components needed for your project (**trescolighting.com/productconfigurator**).





OptiPocket LED Puck Light

OptiPockit Recessed LED Puck Light 351
OptiPocket Surface Mount Accessories 351

FineLine 3.0

FineLine 3.0 LED Series 353
FineLine Accessories 353

FlexTape

FlexTape SMD 355
FlexTape SMD Accessories 355
FlexTape COB 357
FlexTape COB Accessories 357

Neoloop

Neoloop N4 359
Neoloop Accessories 359

Infinex

Infinex Extrusion Styles 361
Diffusers 362
End Cap Sets 362
FlexTape Starter Cords 363
U-Clips/Magnets 363

Snip

Snip Light Panel 365
Snip Accessories 365







PowerSync 24V Plug-In Power Supplies

PowerSync 24V Plug-In Power Supplies 367
PowerSync Connectors 367

FREEDiM Controllers

FREEDiM Series Universal Receiver 369
FREEDiM Series Dimmers 369
FREEDiM Series 3 Zone Remote 369
Wireless Door Sensor Receiver 369
Wireless Door Sensor 369

PowerSync Controllers

PowerSync Wireless Controllers 371
PowerSync Wired Controllers 373

Hardwire Power Supply

24VDC Industrial Wall Dimmable Hardwire Power Supplies 375

Installation Accessories

Wire Channel 377
Class 2 Wire 377
DIY Connectors 377
VHB Tape 377

= Required Accessories = Optional Accessories

OptiPockit LED Puck Light

Maximum Output | Maximum Efficiency
Minimal Cost



Features & Benefits

- Optipockit SL (select) allows the installer to set the color temperature and the lumen output pre-installation, simplifying lighting layouts
- The OptiPockit DM (dimmable) can be dimmed with our FREEDiM controllers, in-line dimmers for plugin applications and aftermarket dimmers for hardwired power supplies
- Recess mount with nickel, black and white trims or surface mount with accessories
- Typical applications: in cabinet, under cabinet, and store displays

Find out more information about OptiPockit Puck Lighting at trescolighting.com/OptiPockit

1-800-227-1171 | trescolighting.com

c UL us LISTED | CLOSET LISTED | 5 YEAR WARRANTY | DIMMABLE | tresco lighting

OptiPockit Recessed LED Puck Light

74 Lm/W | 100° Beamspread | CRI 90 | Nickel, Black, White finishes

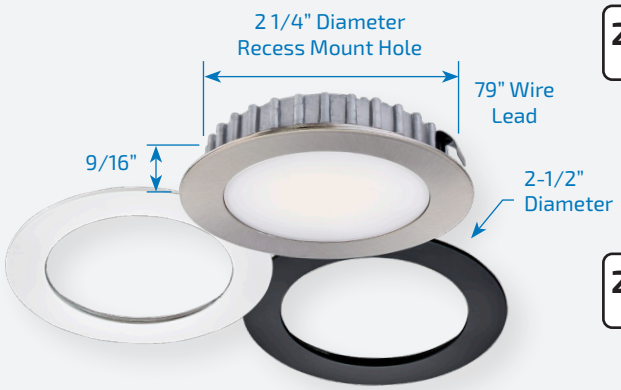

	Power		Lumens	Color Temp	Part #	SLP
OptiPockit SL (Selectable Power & CCT)	LO MD HI	1.3w 2.7w 4.5w	194lm	30K	L-OPSL-24RC-NBW-1	$48.99
				35K		
				50K		
OptiPockit DM (Full Range Dimming)	MD	3w	279lm	27K	L-OPDM-24R27K-NBW-1	$58.99
				30K	L-OPDM-24R30K-NBW-1	$58.99
				35K	L-OPDM-24R35K-NBW-1	$58.99
				50K	L-OPDM-24R50K-NBW-1	$58.99

*OptiPockit DM replaces Power Pockit and other Pockit and EquiLine puck lights

24VDC Power Supply



	Part #	Finish	SLP
96w	L-PSPLG-24V96W-1	24 Volt 96 Watt Power Supply with 6 MINI Ports and a 5 amp terminal block	$120.99

*See page 367 for additional details

OptiPockit® Surface Mount Accessories



	Part #	Finish	SLP
OptiPockit (Round Trim Surface Mount Ring)	L-OPAC-SAR-NI-1	Nickel	$13.99
	L-OPAC-SAR-BL-1	Black	$13.99
	L-OPAC-SAR-WH-1	White	$13.99

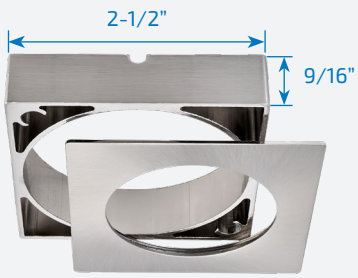

	Part #	Finish	SLP
OptiPockit (Square Surface Mount Ring and Square Trim Ring)	L-OPAC-TKS-NI-1	Nickel	$21.99
	L-OPAC-TKS-BL-1	Black	$21.99
	L-OPAC-TKS-WH-1	White	$21.99

Photometric Data

Height	Light Output	Beam Area
3.3ft (1 m)	9Fc (97lx)	8.1ft (2.5 m)
6.6ft (2 m)	2Fc (22lx)	16.2ft (4.9 m)
9.8ft (3 m)	1Fc (11lx)	24.1ft (7.4 m)

L-OPDM-24R30K-NBW-1 Tested

REV-A-SHELF

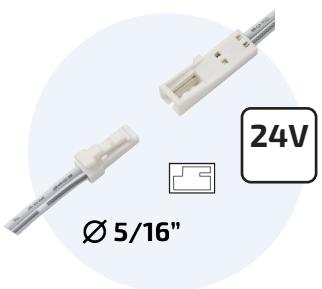

FineLine 3.0

Maximum Output | Maximum Efficiency | Minimal Cost



Features & Benefits

- Minature Profile - 3/8" (10 mm)
- White tunable from 3000K - 5000K
- 120° beam angle
- *Luniform output - no "dots"
- Available in (4) lengths - 8" (203 mm), 12" (305 mm), 22" (559 mm), or 34" (864 mm)
- Linkable
- L79" (2m) starter cord included
- Surface mount

FineLine 3.0 LED Series

3W/ft. | 120° Beamspread | 208.5 Lumens/ft. | Aluminum Finish

Wattage	Efficacy (lm/W)	Input Voltage	Diode Life	Max Per 96W Power Supply	Mounting	Warranty	Beam Angle
3W/ft. (14.4W/m)	63lm/w	24VDC	50,000 Hours	32 ft.	Surface	5 Year	120



24V

Part #	Length	Tunable	SLP
L-FNL-24VCCT-8-1	8" (203 mm)	30K - 50K	$69.99
L-FNL-24VCCT-12-1	12" (305 mm)	30K - 50K	$85.99
L-FNL-24VCCT-22-1	22" (559 mm)	30K - 50K	$142.99
L-FNL-24VCCT-34-1	34" (864 mm)	30K - 50K	$186.99

Maximum continuous run of 12 ft. (3.7 m) to prevent voltage drop. Maximum 13 ft. (4 m) per 60W power supply. 79" (2 m) Starter Cord and mounting U-Clips are included with each light.

24VDC Power Supply

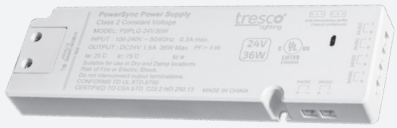

	Part #	Finish	SLP
96w	L-PSPLG-24V96W-1	24 Volt 96 Watt Power Supply with 6 MINI Ports and a 5 amp terminal block	$120.99

*See page 367 for additional details

FineLine Accessories



24V

Part #	Length	Description	SLP
L-FNL-LNK-6-1	2" (5 cm)	Stick Linking Cord	$5.99
L-FNL-LNK-24-1	6" (15 cm)	Stick Linking Cord	$8.99



L-FNL-24VCCT-90CON-1	90 Degree Connector	$15.99



L-FNL-MAGCLP-1	Magnetic U-Clip	$10.99

Photometric Data

Height	Light Output	Beam Area
3.3ft (1 m)	9Fc (97lx)	3.4ft L x 3.6ft W (1 m L x 1.1 m W)
6.6ft (2 m)	2Fc (22lx)	10.3ft L x 10.8ft W (3.1 m L x 3.3 m W)
9.8ft (3 m)	1Fc (11lx)	20.5ft L x 21.6ft W (6.2 m L x 6.6 m W)

L-STKH034-CNI-1 Tested

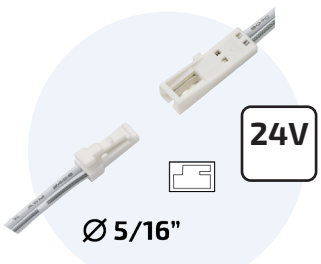

FlexTape® SMD

Maximum Output | Maximum Efficiency | Minimal Cost

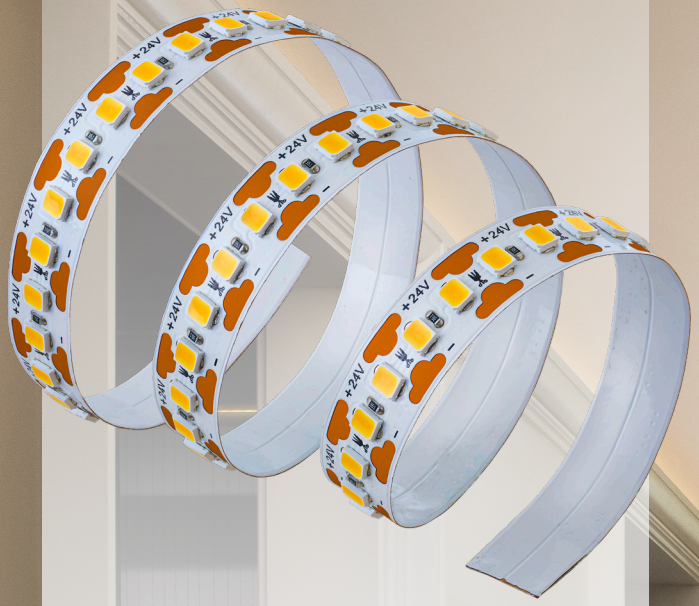

Features & Benefits

- High LED density for uniform lighting
- Proprietary LEDs that ensure accurate color temperature < 3 SDCM
- Consistent cut points and larger copper pads for easy installs
- Eco-friendly paper packaging with simplified installation instructions
- Spools sized to provide even light along the entire run
- Clear view tape connector eliminates shadowing in FlexTape® layouts

Extrusions and Diffusers for FlexTape® available at trescolighting.com/extrusions

Photometric Data

Height	Light Output	Beam Area
3.3ft (1 m)	12Fc (129lx)	9.3ft (2.8 m)
6.6ft (2 m)	3Fc (32lx)	18.6ft (5.9 m)
9.8ft (3 m)	1Fc (11lx)	27.6ft (8.4 m)

L-FLSMD-24MD35K-16S-1 Tested

DIMMABLE | c UL us LISTED | 5 YEAR WARRANTY

1-800-227-1171 | trescolighting.com

tresco lighting

FlexTape® SMD

*FlexTape SMD Replaces previous FlexTape models

FlexTape SMD	Wattage	Lumens (lm/W)	Efficacy (lm/W)	Input Voltage	Diode Life (Hours)	Max Per 96W PowerSupply	Mounting	Warranty	Beam Angle
LO	1.5W/ft.	190	130	24VDC	50,000	64 ft.	Surface	5 Year	110
MD	3W/ft.	390	130	24VDC	50,000	32 ft.	Surface	5 Year	110
HI	3W/ft.	390	130	24VDC	50,000	32 ft.	Surface	5 Year	110

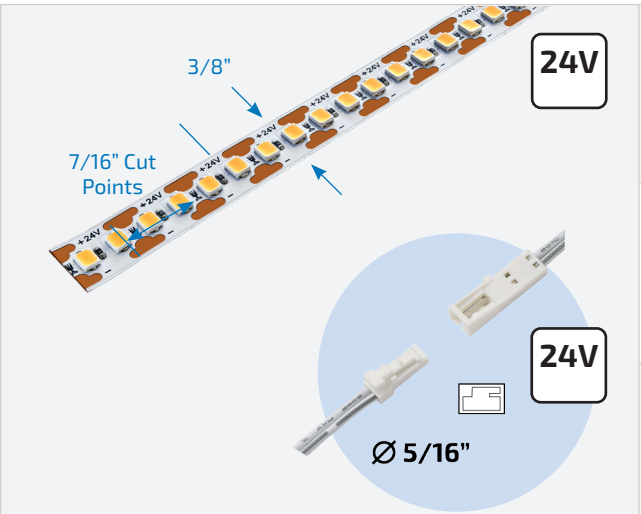

LO	190lm/ft.	27K	L-FLSMD-24LO27K-20S-1	20' Spool	$237.99
		30K	L-FLSMD-24LO30K-20S-1		$237.99
		35K	L-FLSMD-24LO35K-20S-1		$237.99
		50K	L-FLSMD-24LO50K-20S-1		$237.99
		65K	L-FLSMD-24LO65K-20S-1		$237.99
MD	390lm/ft.	27K	L-FLSMD-24MD27K-16S-1	16' Spool	$190.99
		30K	L-FLSMD-24MD30K-16S-1		$190.99
		35K	L-FLSMD-24MD35K-16S-1		$190.99
		50K	L-FLSMD-24MD50K-16S-1		$190.99
		65K	L-FLSMD-24MD65K-16S-1		$190.99
HI	564lm/ft.	27K	L-FLSMD-24HI27K-13S-1	13' Spool	$154.99
		30K	L-FLSMD-24HI30K-13S-1		$154.99
		35K	L-FLSMD-24HI35K-13S-1		$154.99
		50K	L-FLSMD-24HI50K-13S-1		$154.99
		65K	L-FLSMD-24HI65K-13S-1		$154.99

24VDC Power Supply



	Part #	Finish	SLP
96w	L-PSPLG-24V96W-1	24 Volt 96 Watt Power Supply with 6 MINI Ports and a 5 amp terminal block	$120.99

*See page 367 for additional details

FlexTape® Accessories

	Model Number	Description	SLP
	L-FLTPE-24SLD-79-DFE-1	FlexTape Power Connector, 24VDC, Starter Cord, 79", Includes 2-Wire Splicer	$8.99
 2"	L-FLTPE-LNK-2-DFE-1	FlexTape® to FlexTape® connectors available in 2", 6", 24", and 96" lengths, with Wire Splicer options offered in 24" and 96" only.	$4.99
6"	L-FLTPE-LNK-6-DFE-1		$4.99
24"	L-FLTPE-LNK-24-DFE-1		$7.99
96"	L-FLTPE-LNK-96-DFE-1		$11.99
	L-FLTPE-TEE-DFE-1	FlexTape Tee Connector	$6.99
	L-FLTPE-CLRTEE-DFE-1	FlexTape Clear Tee Connector	$18.99
	L-FLTPE-CON90-DFE-1	FlexTape 90° Connector	$12.99
	L-FLTPE-LNKCON-DFE-1	FlexTape to Link Cord Connector	$9.99
	L-FLTPE-BTB-DFE-1	FlexTape Back-To-Back Connector	$9.99

FlexTape® COB

Maximum Output | Maximum Efficiency | Minimal Cost



Features & Benefits

Chip on Board or "COB" FlexTape is the latest advancement in tape lighting. With diodes directly mounted on a printed circuit board and a continuous fortified coating, this flexible, high density LED lighting strip creates our Luniform look without dark spots - no covers or filters needed!

- New generation of tape lighting
- 116° beam angle
- Available in 3000K, 5000K
- Wattage: 3.5W/ft. - 20' (6.5m) roll
- Infinite cut points
- High-density lighting
- Can be used with Infinex extrusions (sold separately)
- Indoor use only

DIMMABLE

c UL us LISTED

5 YEAR WARRANTY

tresco lighting

FlexTape® COB

3.5W/ft. | 116° Beamspread | 300 Lumens/ft.

Wattage	Efficacy (lm/W)	Input Voltage	Diode Life	Max Per 96W Power Supply	Mounting	Warranty	Beam Angle
3.5W/ft.	85lm/w	24VDC	50,000 Hours	27 ft.	Surface	5 Year	116



24V

Part #	Length	Color Temp	SLP
L-FLCOB-24MD30K-20-1	20' (6.5 m)	30K	$272.99
L-FLCOB-24MD50K-20-1	20' (6.5 m)	50K	$272.99
L-FLCOB-24MD30K-164S-1	164' (50 m)	30K	$2,278.99
L-FLCOB-24MD50K-164S-1	164' (50 m)	50K	$2,278.99

Maximum continuous run is 20' (6.5m). Mounts with adhesive backing. Infinate Cut Points. To be used on clean, smooth surfaces. Pressure must be applied for proper 3M™ tape adhesion.

24VDC Power Supply

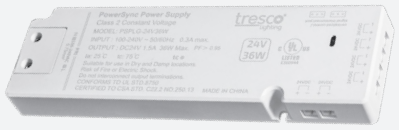

	Part #	Finish	SLP
96w	L-PSPLG-24V96W-1	24 Volt 96 Watt Power Supply with 6 MINI Ports and a 5 amp terminal block	$120.99

*See page 367 for additional details

FlexTape® COB Accessories

		Model Number	Description	SLP
		L-FLTPE-24SLD-79-DFE-1	FlexTape Power Connector, 24VDC, Starter Cord, 79", Includes 2-Wire Splicer	$8.99
	2"	L-FLTPE-LNK-2-DFE-1	FlexTape® to FlexTape® connectors available in 2", 6", 24", and 96" lengths, with Wire Splicer options offered in 24" and 96" only	$4.99
	6"	L-FLTPE-LNK-6-DFE-1		$4.99
	24"	L-FLTPE-LNK-24-DFE-1		$7.99
	96"	L-FLTPE-LNK-96-DFE-1		$11.99
		L-FLTPE-CLRTEE-DFE-1	FlexTape Clear Tee Connector	$18.99
		L-FLTPE-CON90-DFE-1	FlexTape 90° Connector (5 pack)	$12.99
		L-FLTPE-BTB-DFE-1	FlexTape Back-To-Back Connector (5 pack)	$9.99
		L-FLTPE-LNKCON-DFE-1	FlexTape to Link Cord Connector (5 pack)	$9.99

Photometric Data

Height	Light Output	Beam Area
1ft (0.3 m)	123Fc (1324lx)	3.1ft L x 8.5ft W (0.94 m L x 2.6 m W)
3ft (0.9 m)	13.6Fc (146.3lx)	9.3ft L x 32.6ft W (2.9 m L x 7.8 m W)
6ft (1.8 m)	3.4Fc (36.7lx)	18.7ft L x 51.2ft W (5.7 m L x 15.6 m W)

L-FLXCOB24-48RU-1 Tested

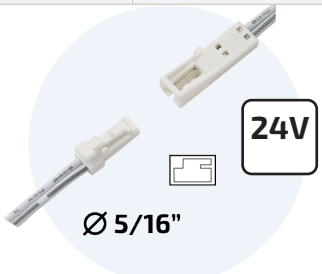

Neoloop N4

Consistent, Seamless Illumination



Features & Benefits

- Evenly diffused LED lighting offers ease of installation
- Fixture on a roll that eliminates the need for extrusions, lenses, and connector cables
- N4: Narrow and shallow profile with horizontal bend, designed with pcb reinforcement for reliable applications

DIMMABLE · LUNIFORM · CLOSET LISTED · UL LISTED · 5 YEAR WARRANTY · CUTTABLE · IP65

tresco lighting

1-800-227-1171 | trescolighting.com

Neoloop N4

2.2 W/FT | 134 lm/W | 120° Beamspread | CRI >90 | 2-in Cutx

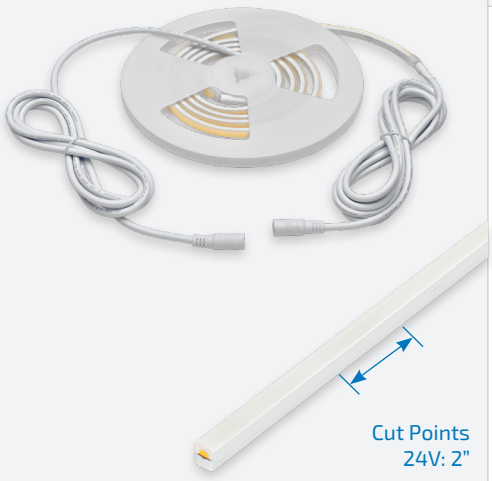

	Watts	Lumens	CCT	Part #	Length	SLP
24V	11W/Roll	1,474 lm	30K	L-N4-24V3WM-30K-60-1	5 ft	$124.99
			35K	L-N4-24V3WM-35K-60-1		
			50K	L-N4-24V3WM-50K-60-1		
	17.6W/Roll	2,358 lm	30K	L-N4-24V3WM-30K-96-1	8 ft	$187.99
			35K	L-N4-24V3WM-35K-96-1		
			50K	L-N4-24V3WM-50K-96-1		
	35.2W/Roll	4,716 lm	30K	L-N4-24V3WM-30K-192-1	16 ft	$353.99
			35K	L-N4-24V3WM-35K-192-1		
			50K	L-N4-24V3WM-50K-192-1		

Wireless control accessories can be found on page 14

24VDC Power Supply

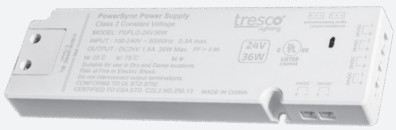

	Part #	Finish	SLP
96w	L-PSPLG-24V96W-1	24 Volt 96 Watt Power Supply with 6 MINI Ports and a 5 amp terminal block	$120.99

*See page 367 for additional details

NeoLoop N4 Accessories

			Part #	Description	
	24V	96"	L-PWCON-24SXT-96-DFE-1	Power to Light Starter Extension Cord with Wire Splicer	$8.99
			L-PWCON-24MLT6-DFE-1	Power to Light Splitter Cord with Six MINI Ports	$7.99

Infinex

Maximum Output | Maximum Efficiency | Minimal Cost

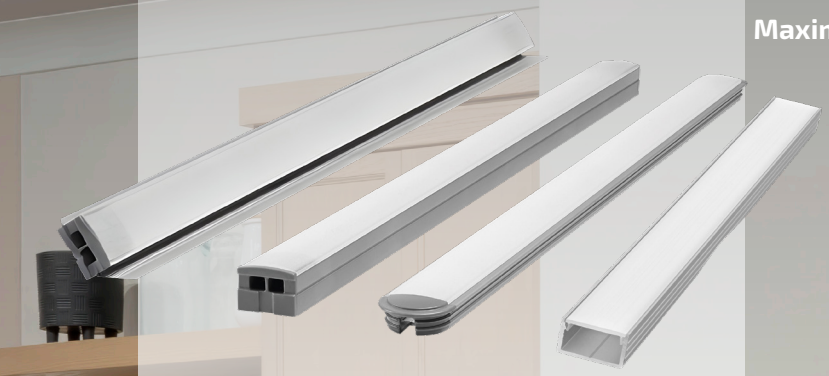

Features & Benefits

Infinex is the Innovative, patented, LED aluminum extrusion system by Tresco Lighting®. Gone are the days of set fixture sizes, simply choose your style, cut to desired length and assemble to create a customized LED fixture. Designed by our in-house engineers and made in the USA, Infinex carries a UL safety certification and is available in six profiles with an array of installation options. Infinex is designed for easy DIY application and we also offer prefabricated custom solutions. Go to trescolighting.com to submit your project and receive a custom quote.

Infinex Extrusion Styles

Satin Nickel Finish

Square

- Surface mount using magnets, U-Clips or screws
- Easily slide magnets into channel on bottom of light
- Uses Infinex starter leads

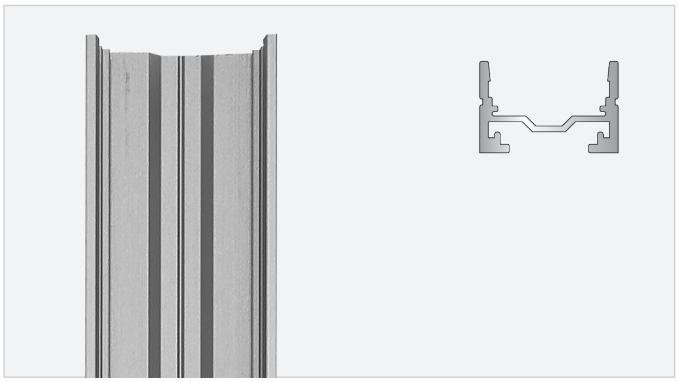

Recessed

- Grooved sides allow extrusion to pressure fit into place*
- Uses standard FlexTape starter lead

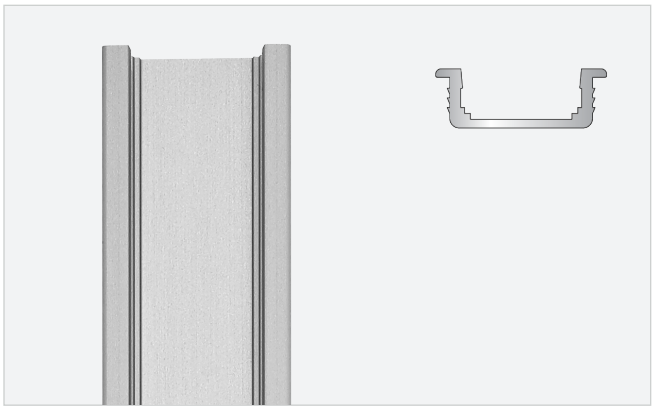

Angle

- For corner mounting with screws only
- Fixture directs light at 30° angle
- Uses Infinex starter leads

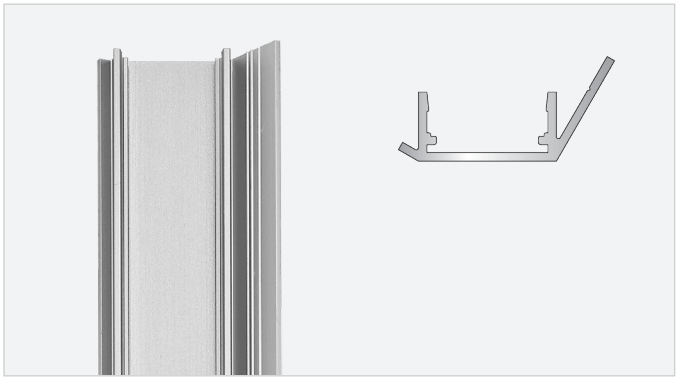

Flush

- No end caps...this extrusion is meant for channels that go the entire width of height of the casework
- Comes with milk diffuser (unattached)
- Uses standard FlexTape starter lead

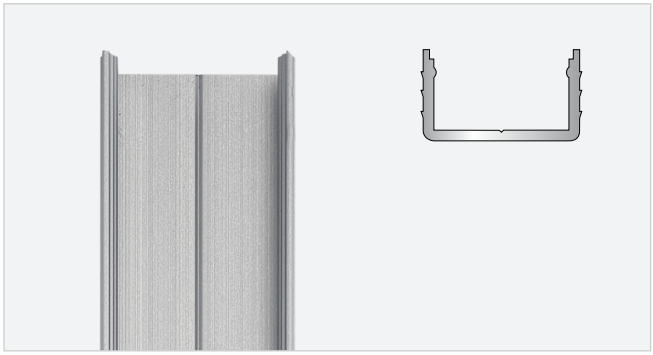

Custom Fully Assembled Fixtures

Made in the USA and Ships within 7 days



- 4 unique profiles
- 17 light output options
- Black or white cords (multiple lengths)
- 4"-96" (101 mm - 2438 mm) fixture lengths in 1/16" (1.6 mm) increments
- Milk diffuser optional
- Bulk, individual, or kit packaged
- No minimum quantity required

Extrusions

Part #	Length	Description	SLP
L-XANG72-SC-1	72" (1.8 m)	Angled Extrusion, Satin Clear	$37.99
L-XREC72-SC-1	72" (1.8 m)	Recessed Extrusion, Satin Clear	$30.99
L-XREC72-BL-1	72" (1.8 m)	Recessed Extrusion, Black	$30.99
L-XREC94-SC-1	94" (2.4 m)	Recessed Extrusion, Satin Clear	$45.99
L-XSQR72-SC-1	72" (1.8 m)	Square Extrusion, Satin Clear	$32.99
L-XSQR94-SC-1	94" (2.4 m)	Square Extrusion, Satin Clear	$50.99
L-XFL72-SC-1	72" (1.8 m)	Flush Extrusion, Satin Clear with Milk Diffuser	$50.99
L-XFL94-SC-1	94" (2.4 m)	Flush Extrusion, Satin Clear with Milk Diffuser	$85.99



*To be used in conjunction with FlexTape® SMD and COB

Diffusers



Part #	Description	SLP
L-X72-DIFF-MLK-1	Diffuser, Milk	$19.99
L-X94-DIFF-MLK-1	Diffuser, Milk	$23.99

End Cap Sets

Part #	Description	SLP
L-XANGECP-GY-1	Angled end cap set, Gray	$4.99
L-XRECECP-GY-1	Recessed end cap set, Gray	$4.99
L-XSQRECP-GY-1	Square end cap set, Gray	$4.99

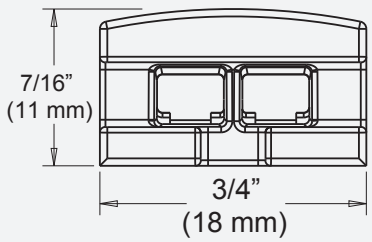

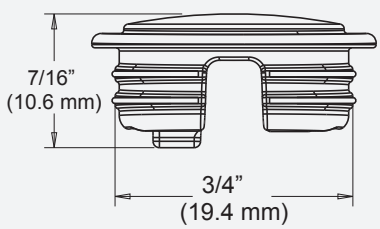

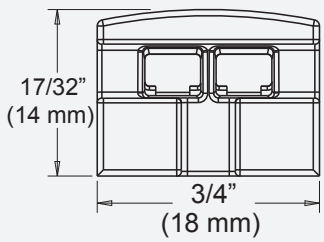

Infinex Accessories

		Model Number	Description	SLP
		L-XPKT-2IN-WH-1	FlexTape Power Connector, 24VDC, Starter Cord, 79", Includes 2-Wire Splicer	$5.99
	2"	L-FLTPE-LNK-2-DFE-1	FlexTape® to FlexTape® connectors available in 2", 6", 24", and 96" lengths, with Wire Splicer options offered in 24" and 96" only	$4.99
	6"	L-FLTPE-LNK-6-DFE-1		$4.99
	24"	L-FLTPE-LNK-24-DFE-1		$7.99
	96"	L-FLTPE-LNK-96-DFE-1		$11.99

24VDC Power Supply

	Part #	Finish	SLP
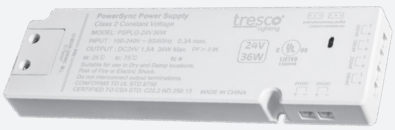 96w	L-PSPLG-24V96W-1	24 Volt 96 Watt Power Supply with 6 MINI Ports and a 5 amp terminal block	$120.99

*See page 367 for additional details

U-Clips/Magnets

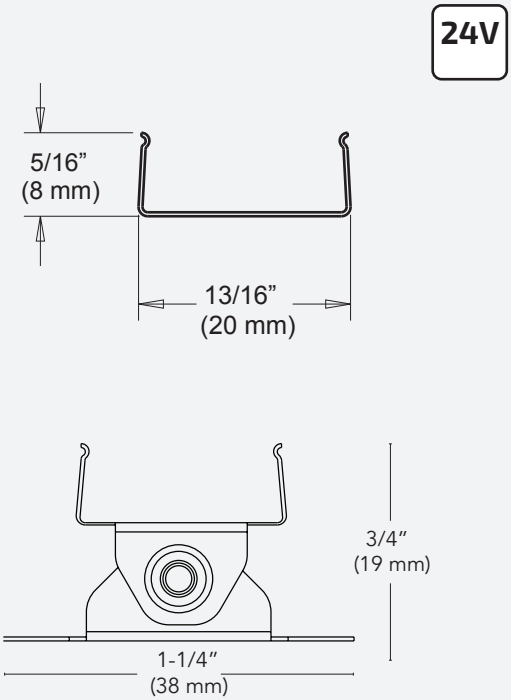

Part #	Description	SLP
L-XSQR-UCLP-1	Square U-Clips Set (2 Clips)	$3.99
L-XSQRSWCLP-1	Square Swivel Clips Set (2 Clips)	$13.99
L-XRM42-155-1	Set of 2 Magnets	$11.99
L-EXTMP-VHB-1	Set of 2 Mounting Plates	$6.99

One U-Clip/magnet is recommended for every 1 ft. (0.3 m) of extrusion.
No. #4 Phillips flat head screws are included with each U-Clip set.
Mounting Plates to be used with magnet mounted Infinex.

Snip

Maximum Output | Maximum Efficiency | Minimal Cost



Features & Benefits

Paper-thin illumination, Snip panels have the flexiility to conform to curved surfaces and wrap around objects for continuous even illumination. The extremely lightweight LED sheets can be snipped into 3" x 3" (76 mm x 76 mm) squares and reconnected into any custom configuration; a versatile lighting solution for unique applications.

- Offered in 15W/ft2 (high) and 8W/ft2 (standard)
- Sold as a 24" x 9" (610 mm x 229 mm) flexible LED panel
- Available in (4) color temperatures: 3000K, 4000K, 5000K and 6500K
- Paper-thin with the flexibility to curve and wrap around objects or surfaces
- Cuttable and linkable modular 24VDC DIY lighting system
- No soldering required - simple FlexConnect connectors
- Strong 300 LSE 3M™ adhesive backing

1-800-227-1171 | trescolighting.com

DIMMABLE

c UL us LISTED

5 YEAR WARRANTY

tresco lighting

24VDC Snip Light Panel

120° Beamspread

Wattage	Lumens	Efficacy (lm/W)	Diode Life	Max Per 96W Power Supply	CRI	Mounting	Warranty
Full Sheet: 12W 8W/ft² (0.5W per 3" square)	Full Sheet: 1148 765/ft²	95.7	50,000 Hours	8 Panels	>93	Surface	5 Year
Full Sheet: 22.5W 15W/ft² (0.94W per 3" square)	Full Sheet: 2067 1378/ft²	91.9		5 Panels			



24V

Part #	Size	Color Temp	SLP
L-SPFL8WA-30K-1	8W/SQFT	30K	$174.99
L-SPFL8WA-40K-1	8W/SQFT	40K	$174.99
L-SPFL8WA-50K-1	8W/SQFT	50K	$174.99
L-SPFL8WA-65K-1	8W/SQFT	65K	$174.99
L-SPFL15WA-30K-1	15W/SQFT	30K	$174.99
L-SPFL15WA-40K-1	15W/SQFT	40K	$174.99
L-SPFL15WA-50K-1	15W/SQFT	50K	$174.99
L-SPFL15WA-65K-1	15W/SQFT	65K	$174.99

24VDC Power Supply

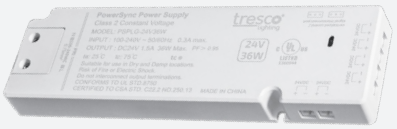

	Part #	Finish	SLP
96w	L-PSPLG-24V96W-1	24 Volt 96 Watt Power Supply with 6 MINI Ports and a 5 amp terminal block	$120.99

*See page 367 for additional details

Snip Accessories

		Model Number	Description	SLP
		L-24B2SPKT-2M-1	Snip Panel Start Cord	$16.99
	2"	L-FLTPE-LNK-2-DFE-1	FlexTape® to FlexTape® connectors available in 2", 6", 24", and 96" lengths, with Wire Splicer options offered in 24" and 96" only	$4.99
	6"	L-FLTPE-LNK-6-DFE-1		$4.99
	24"	L-FLTPE-LNK-24-DFE-1		$7.99
	96"	L-FLTPE-LNK-96-DFE-1		$11.99
		L-XSBTB-1	24VDC 10 mm, 2 Position Back-to-Back Connector Clear (5 pack)	$20.99

Photometric Data

Height	Light Output	Beam Area
1ft (0.3 m)	381Fc / 686Fc (4102lx) / (7384lx)	3.3ft L x 3.2ft W (1 m L x 0.91 m W)
3ft (0.9 m)	42.3Fc / 76.2Fc (455.3lx) / (820.2lx)	10ft L x 9.6ft W (3 m L x 3 m W)
6ft (1.8 m)	10.6Fc / 19.1Fc (114.1lx) / (205.6lx)	20ft L x 19.2ft W (6.2 m L x 6 m W)

L-SPFL8WA-50K-1 / L-SPFL15WA-50K-1 Tested

PowerSync 24V Plug-In Power Supplies



Features & Benefits

- MINI power ports for easy installation, with an additional independent MINI port that enables dual control options on the 60W and 96W PowerSync models
- Indicator light changes from green to red, signaling potential power supply damage
- 60W and 96W PowerSync power supplies feature a 5-amp terminal block, supporting higher-wattage applications for enhanced reliability and performance
- Centralized control ports (pink) allow for easy integration of controllers with your lighting system
- Additional controllers and accessories
- Up to 20 PowerSync models can be linked through centralized pink ports (feature coming soon)
- A/C power cord can be cut and shortened* for a tidy, tailored installation

** Unplug the cord before cutting*

Find out more information about PowerSync Supplies at trescolighting.com/PowerSync

1-800-227-1171 | trescolighting.com

PowerSync 24VDC Plug-In Power Supplies

Input Voltage 120VAC | Power Factor >0.95

		Power	Part #	Description	SLP
	24V	36w	L-PSPLG-24V36W-1	24 Volt 36 Watt Power Supply with 6 MINI Ports	$72.99
		60w	L-PSPLG-24V60W-1	24 Volt 60 Watt Power Supply with 6 MINI Ports and a 5 amp terminal block	$93.99
		96w	L-PSPLG-24V96W-1	24 Volt 96 Watt Power Supply with 6 MINI Ports and a 5 amp terminal block	$120.99

*PowerSync power supplies replace previous plug in power supplies

PowerSync Connectors

			Part #	Description	
	24V	96"	L-PWCON-24SXT-96-DFE-1	Power to Light Starter Extension Cord with Wire Splicer	$8.99
			L-PWCON-24MLT6-DFE-1	Power to Light Splitter Cord with Six MINI Ports	$7.99

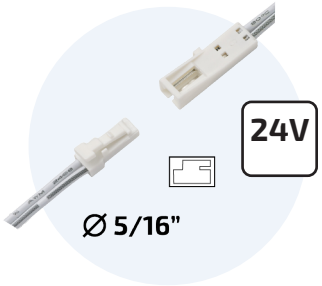

FREEDiM Controllers

Maximum Control | Maximum Efficiency | Minimal Cost



Features & Benefits

- 96W Capacity (24VDC)
- Power failure memory
- Multiple receivers can be used in a single power supply or within a room to achieve multiple zones of control
- Simple one button pairing with dimmers

FREEDiM Series Universal Receiver



Part #	Description	SLP
L-WLD-1REC-1	12/24VDC FREEDiM Series Receiver, White	$117.99

A single receiver can be programmed to up to 8 different FREEDiM Series remotes/dimmers.
24VDC 3 port adaptor cord set included.

FREEDiM Series Deco Wall Dimmer

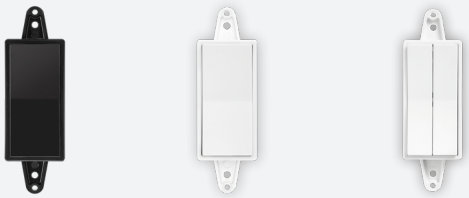

Part #	Description	SLP
L-WLD-1WAL-WH-1	FREEDiM Series Deco Wall Dimmer, White	$179.99
L-WLD-1WAL-BL-1	FREEDiM Series Deco Wall Dimmer, Black	$179.99
L-WLD-2WAL-WH-1	FREEDiM Series Two-Zone Deco Wall Dimmer, White	$196.99

Must have at least one receiver (L-WLD-1REC-1) to operate
A single dimmer can be programmed to up to 10 different receivers.

FREEDiM Series Micro Dimmer



Part #	Description	SLP
L-WLD-1RND-NI-1	FREEDiM Series Micro Dimmer, Nickel	$55.99

Must have at least one receiver (L-WLD-1REC-1) to operate
A single dimmer can be programmed to up to 10 different receivers.

FREEDiM Series 3 Zone Remote



Part #	Description	SLP
L-WLD-3RMT-BL-1	FREEDiM Series 3-Zone Remote, Black	$82.99

Must have at least one receiver (L-WLD-1REC-1) to operate
A single dimmer can be programmed to up to 10 different receivers.

Wireless Door Sensor Receiver

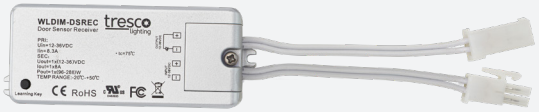

Part #	Description	SLP
L-WLDSREC-1	12/24VDC Wireless Door Sensor Receiver, Silver	$113.99

Single receiver can be programmed with up to 4 door sensors.
24VDC 3 port adaptor cord set included.

Wireless Door Sensor



Part #	Description	SLP
L-WLDS-NI-1	FREEDiM Wireless Door Sensor, Nickel	$77.99

Must have at least one receiver (L-WLDSREC-1) to operate

PowerSync Controllers



Features & Benefits

Designed to pair seamlessly with Tresco® PowerSync plug-in power supplies and Tresco LED lighting, these controllers offer intuitive, reliable control for any application from subtle accent lighting to full task illumination. With options including dimmable and on/off touch styles, recessed and surface mount designs, and motion- and door activated controls. Whether activated by a simple touch, a wave of your hand, or the opening of a cabinet door, the controllers deliver effortless control in finishes ranging from White to Nickel (varies by model). The result is clean integration, consistent performance, and lighting that responds naturally to how spaces are used.

Continued on next page

c UL us LISTED

CLOSET LISTED

5 YEAR WARRANTY

tresco lighting

PowerSync Wireless Controllers

	Part #	Description	SLP
	L-PSWLS-CDS-1	Door Sensor, Nickel	$35.99
	L-PSWLS-CMS-**-1	Motion Sensor, Black or Nickel	$35.99
	L-PSWLS-CTD-**-1	Touch Dimmer, Black or Nickel	$27.99
	L-PSWLS-CRD-**-1	Round Dimmer, Black or Nickel	$27.99
	L-PSWLS-RCW-1	Wireless Receiver, White	$27.99

***Add BL for Black or NI for Nickel*

PowerSync Controllers Cont.

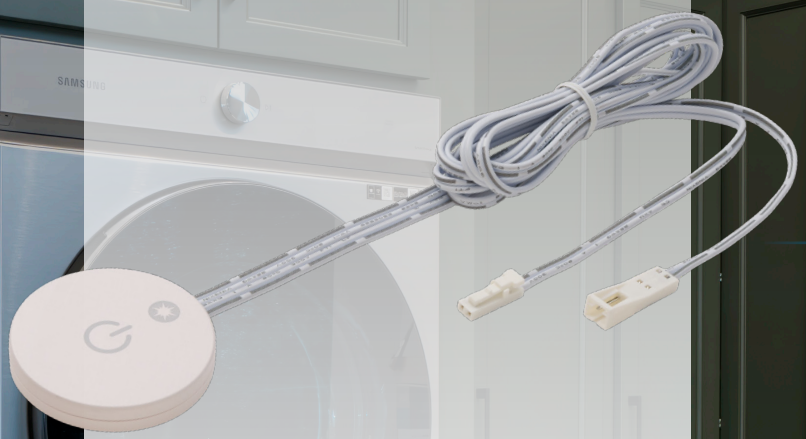

Features & Benefits Cont.

- Seven wired and Five wireless controller options
- Multiple control methods, including touch, wave/motion activation, and door-open/door-closed operation
- Dimmable and non-dimmable options
- Recessed, side-mount, surface-mount, and undermount installations
- Available in White or Nickel (varies by model)
- Compatible with Tresco PowerSync plug-in power supplies and Tresco Single color low voltage lights
- Max continuous run on a single output: 24VDC/72W
- Input/Output and sensor cable lengths: 38"
- Surface mounts include surface mount clips
- Improved, smaller design allows controllers to be easily recessed using a 5/16" (8 mm) or 1/2" (12 mm) drill bit
- Class 2 or LPS rated
- Indoor-rated

PowerSync Wired Controllers

	Part #	Description	SLP
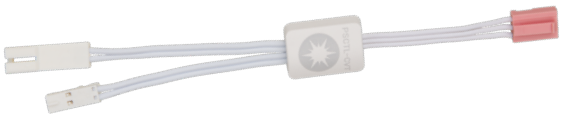	L-PSCTL-CVT-1	Central Control Port Converter, White	$8.99
	L-PSCTL-DS1-NI-1	Single Door Sensor, Door open: light on, Door closed: light off, 1/2" to 4" Detecting Range, Requires an 8 mm diameter hole for recessed mounting, Nickel	$32.99
	L-PSCTL-DS2-NI-1	Double Door Sensor, Door open: light on, Door closed: light off, 1/2" to 4" Detecting Range, Requires an 8 mm diameter hole for recessed mounting, Nickel	$58.99
	L-PSCTL-TDR-**-1	Touch Dimmer, Recessed, Smaller design allows for recessing using a 5/16" (8 mm) or 1/2" (12 mm) drill bit, Black or Nickel ***Add BL for Black or NI for Nickel*	$32.99
	L-PSCTL-MOT-NI	Motion Sensor, Motion, Surface or Recessed Mount, PIR, Up to 9' Detection Range, 45s Duration, Requires a 12 mm diameter hole for recessed mounting, Nickel	$32.99
	L-PSCTL-TDS-NI-1	Touch Dimmer, Side Mount, Nickel	$20.99
	L-PSCTL-TCS-WH-1	Touch Dimmer, Surface Mount, Includes surface mount clips, Use with Class 2 or LPS power supply, White	$32.99
	L-PSCTL-TCU-WH-1	Touch Control, On/Off Only, Undermount, 1" Max Surface to Undermount Controller, White	$32.99
	L-PSLNK-79-1	Central Control Link Cord, 79", Links up to 10 PowerSync Power Supplies	$5.99

Hardwire Power Supply



Features & Benefits

- Slim design, under 2" height
- 24 VDC constant voltage output
- High power factor (PF>0.95)
- Built-in hardwire compartment
- All metal construction
- Short circuit protection*
- Overcurrent protection
- Overload protection*
- RFI protection
- Dimmable by standard LED wall dimmers
- Class 2
- Requires electrician to install

*Automatic reset (no fuses)

24VDC Industrial Wall Dimmable Hardwire Power Supplies

	Part #	Description	SLP
	L-DCE96D-CON-1	24VDC 96W Hardwire Dimmable Power Supply, Triac Dimming, Splitter Attached, Plastic Construction	$283.99
	L-24DCH96X3-1	24VDC 288W Commercial/Industrial Metal Hardwire Dimmable Power Supply	$672.99

Installation Accessories

Maximum Efficiency | Minimal Cost

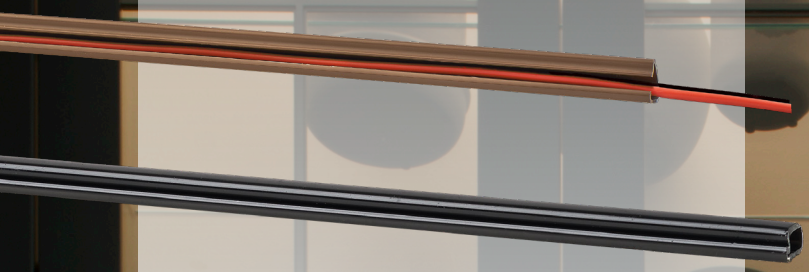

tresco lighting

Wire Channel



Part #	Length	Description	SLP
L-WM5-BL-1	5' (1.5 m)	Wire Management Channel, Black	$15.99
L-WM5-BR-1	5' (1.5 m)	Wire Management Channel, Brown	$15.99

24VDC Class 2 Wire



Part #	Description	SLP
L-16CL2-WH50-1	24VDC 50' (15m) 16 AWG Class 2 Wire Roll, White	$96.99

DIY Connectors



Part #	Description	SLP
L-LED-WCON-BL-1	24VDC DIY Barrel Connectors, Black (1 bag of 10)	$102.99

VHB Tape



Part #	Size	Description	SLP
L-VHBTPE-1134-1	7/16" (11 mm) x 111-1/2' (34 m)	VHB Adhesive Tape Roll	$122.99

Automotive grade VHB tape can be used to mount all fixtures or as a base layer for mounting Tape LED products.


Innovation through Organization™







HOODS, FLOATING SHELVES & BRACKET SOLUTIONS

UNMATCHED CRAFTSMANSHIP

Omega National Products by Rev-A-Shelf® is the industry's preferred resource for quality Wood Range Hoods, Ventilation, Floating Shelves and Wood Cabinet Components. Our Wood Range Hoods and Floating Shelves are available in a variety of sizes, wood species and styles to complement any kitchen design. We make our products in Elkhart, IN using rigorous manufacturing processes and quality control standards.

PROP 65 WARNING FOR CALIFORNIA RESIDENTS

WARNING: These products can expose you to chemicals such as formaldehyde, lead or styrene, which are known to the State of California to cause cancer and birth defects or other reproductive harm. For more information go to www.P65Warnings.ca.gov

REV-A-SHELF®

Our Products:

Wood Range Hoods

Our Turn-Key Wood Range Hood System... Simple & Complete.

We take great pride in providing you with a complete system of the highest quality for hassle-free installation and stunning results.

Turn-Key Wood Range Hood System Includes:

1. Wood Range Hood and choice of chimney sizes, if applicable (sold separately)
2. Silver metallic steel liner with a cut-out that will house any of our Broan ventilators
3. All applicable mounting hardware - including every nut and bolt you'll need

Note: All of the above parts are packed in a heavy-duty re-shippable carton, allowing you to apply your own finish and get it to the job site safely.



Simple & Easy Buying:

1. Choose Range Hood (silver metallic liner for Broan Included)
2. Choose Wall Hood Chimney - if applicable
3. Choose Ventilation option

Floating Shelves

Where Form Meets Function

Floating Shelves are a great way to provide stylish and practical organization for any room in your home, and our Floating Shelves are expertly crafted for durability and are easy to install. We are proud to offer Innovashelf Heavy-Duty Shelf Brackets and Floating Cabinet Hanging Brackets to complement our product line.

Living Room:



Home Office:



Laundry Room:



Bathroom:



WOOD FINISHES:

Crafted from eight high-quality wood species, our products offer the versatility and natural beauty to bring your vision to life. Each piece arrives expertly sanded and ready to finish. Enhance the rich, natural wood grain with a stain or enjoy a smooth, seamless paint application with our paint-grade option.



Maple



Cherry





Rift White Oak



Red Oak



Alder



Walnut



Hickory



Paint Grade



Wall Hoods

Verona | Omni | Artisan | Waterfall
Signature | Modern | Euro

NEW

Verona Tambour Wall Hood

Sleek curves meet unexpected texture in the Verona Tambour Wall Hood. Its signature rounded silhouette and tambour detailing offer a modern twist on classic design.

- Beautiful reeded detail provides visual interest and a custom look that compliments any kitchen
- 30", 36", 42" and 48" widths
- Available in a red oak, rift white oak, maple, cherry and alder; ready to finish
- Hood can be trimmed to the desired height
- Installs easily using our standard French cleat hanging system
- Includes a silver metallic powder-coated liner that accommodates all BROAN® ventilation offered by Omega National Products by Rev-A-Shelf®

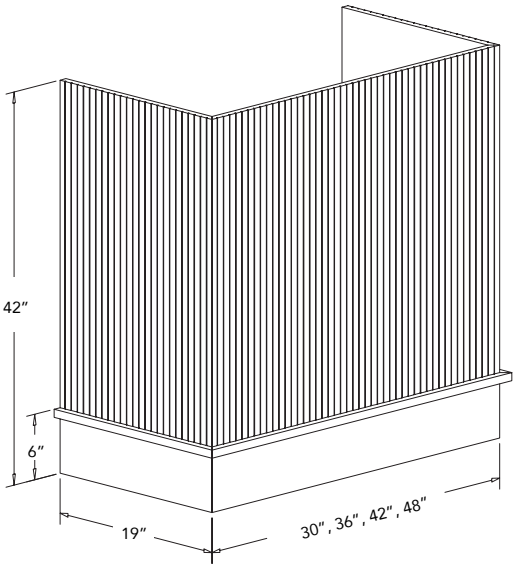



42" Verona Tambour Wall Hood

Verona Tambour Wall Hood 30"W [42" Tall]

PRODUCT	SPECIES	SLP
R7301S30SMB1MUF2	Maple	$2439.99
R7301S30SMB1CUF2	Cherry	$2439.99
R7301S30SMB17UF2	Rift White Oak	$3153.99
R7301S30SMB1OUF2	Red Oak	$2397.99
R7301S30SMB1QUF2	Alder	$2606.99

Verona Tambour Wall Hood 36"W [42" Tall]

PRODUCT	SPECIES	SLP
R7301S36SMB1MUF2	Maple	$2722.99
R7301S36SMB1CUF2	Cherry	$2722.99
R7301S36SMB17UF2	Rift White Oak	$4020.99
R7301S36SMB1OUF2	Red Oak	$2722.99
R7301S36SMB1QUF2	Alder	$2914.99

Verona Tambour Wall Hood 42"W [42" Tall]

PRODUCT	SPECIES	SLP
R7301S42SMB1MUF2	Maple	$2831.99
R7301S42SMB1CUF2	Cherry	$2831.99
R7301S42SMB17UF2	Rift White Oak	$4311.99
R7301S42SMB1OUF2	Red Oak	$2831.99
R7301S42SMB1QUF2	Alder	$3016.99

Verona Tambour Wall Hood 48"W [42" Tall]

PRODUCT	SPECIES	SLP
R7301S48SMB1MUF2	Maple	$2958.99
R7301S48SMB1CUF2	Cherry	$2905.99
R7301S48SMB17UF2	Rift White Oak	$4444.99
R7301S48SMB1OUF2	Red Oak	$2905.99
R7301S48SMB1QUF2	Alder	$3146.99

NEW

Two-Tone Artisan Wall Hood

Add a gorgeous focal point to your kitchen with the Two-Tone Artisan Wall Hood from Omega National Products by Rev-A-Shelf®. Designed for custom finishing in two parts, it allows you to mix and match wood species, paints, and stains to fit any style.

- Create stunning dimension with the two-tone design
- 30", 36", 42" and 48" widths
- Available in red oak, rift white oak, maple, walnut, cherry, alder; ready to finish
- Hood can be trimmed to the desired height
- Installs easily using our standard French cleat hanging system
- Includes a silver metallic powder-coated liner that accommodates all BROAN® ventilation offered by Omega National Products by Rev-A-Shelf®

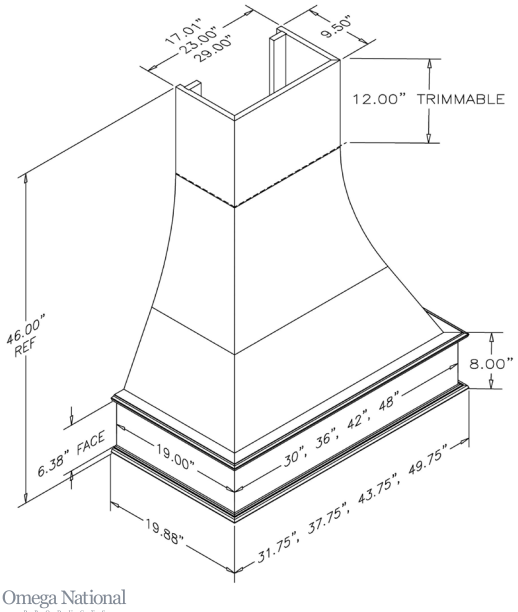



Paint Grade with Walnut Apron

Two-Tone Artisan Wall Hood 30"W

PRODUCT	SPECIES	SLP
RC30B30SMB1XMUF4	Paint Grade With Removable Maple Apron	$1572.99
RC30B30SMB1XCUF4	Paint Grade With Removable Cherry Apron	$1728.99
RC30B30SMB1X7UF4	Paint Grade With Removable Rift White Oak Apron	$1728.99
RC30B30SMB1XOUF4	Paint Grade With Removable Red Oak Apron	$1525.99
RC30B30SMB1XQUF4	Paint Grade With Removable Alder Apron	$1728.99
RC30B30SMB1XEUF4	Paint Grade With Removable Walnut Apron	$1987.99

Two-Tone Artisan Wall Hood 36"W

PRODUCT	SPECIES	SLP
RC30B36SMB1XMUF4	Paint Grade With Removable Maple Apron	$1883.99
RC30B36SMB1XCUF4	Paint Grade With Removable Cherry Apron	$2037.99
RC30B36SMB1X7UF4	Paint Grade With Removable Rift White Oak Apron	$2037.99
RC30B36SMB1XOUF4	Paint Grade With Removable Red Oak Apron	$1839.99
RC30B36SMB1XQUF4	Paint Grade With Removable Alder Apron	$1993.99
RC30B36SMB1XEUF4	Paint Grade With Removable Walnut Apron	$2342.99

Two-Tone Artisan Wall Hood 42"W

PRODUCT	SPECIES	SLP
RC30B42SMB1XMUF4	Paint Grade With Removable Maple Apron	$2044.99
RC30B42SMB1XCUF4	Paint Grade With Removable Cherry Apron	$2146.99
RC30B42SMB1X7UF4	Paint Grade With Removable Rift White Oak Apron	$2146.99
RC30B42SMB1XOUF4	Paint Grade With Removable Red Oak Apron	$1975.99
RC30B42SMB1XQUF4	Paint Grade With Removable Alder Apron	$2112.99
RC30B42SMB1XEUF4	Paint Grade With Removable Walnut Apron	$2468.99

Two-Tone Artisan Wall Hood 48"W

PRODUCT	SPECIES	SLP
RC30B48SMB1XMUF4	Paint Grade With Removable Maple Apron	$2078.99
RC30B48SMB1XCUF4	Paint Grade With Removable Cherry Apron	$2316.99
RC30B48SMB1X7UF4	Paint Grade With Removable Rift White Oak Apron	$2316.99
RC30B48SMB1XOUF4	Paint Grade With Removable Red Oak Apron	$1993.99
RC30B48SMB1XQUF4	Paint Grade With Removable Alder Apron	$2129.99
RC30B48SMB1XEUF4	Paint Grade With Removable Walnut Apron	$2664.99

Omega National Products
Rev-A-Shelf

Artisan Wall Hood



36" Artisan Hood

Embrace classic craftsmanship with the Artisan Wall Hood. With clean lines and timeless proportions, it's the perfect foundation for your preferred stain or paint finish.

- Elegant design provides a custom look that compliments most any kitchen
- 30", 36", 42" and 48" widths
- Available in maple, cherry, rift white oak, red oak, alder and paint-grade; ready to finish
- Hood can be trimmed to the desired height
- Installs easily using our standard French cleat hanging system
- Includes a silver metallic powder-coated liner that accommodates all BROAN® ventilation offered by Omega National Products by Rev-A-Shelf®

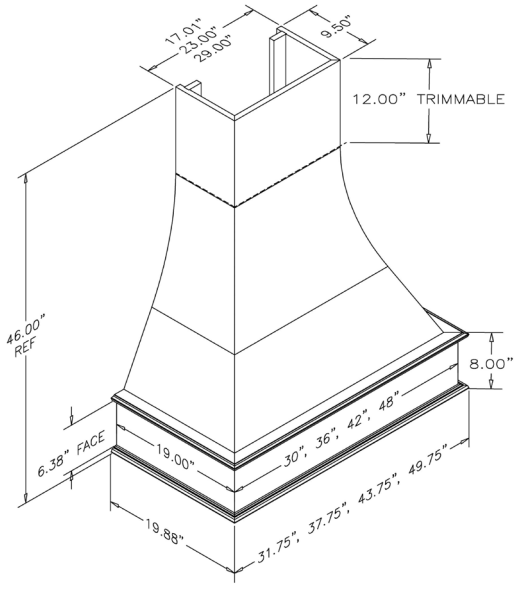

Artisan Wall Hood W30"

PRODUCT	SPECIES	SLP
R30B30SMB1MUF1	Maple	$1587.99
R30B30SMB1CUF1	Cherry	$1736.99
R30B30SMB17UF1	Rift White Oak	$1736.99
R30B30SMB1OUF1	Red Oak	$1532.99
R30B30SMB1QUF1	Alder	$1736.99
R30B30SMB1XUF1	Paint-Grade	$1426.99

Artisan Wall Hood W36"

PRODUCT	SPECIES	SLP
R30B36SMB1MUF1	Maple	$1893.99
R30B36SMB1CUF1	Cherry	$2047.99
R30B36SMB17UF1	Rift White Oak	$2047.99
R30B36SMB1OUF1	Red Oak	$1848.99
R30B36SMB1QUF1	Alder	$2002.99
R30B36SMB1XUF1	Paint-Grade	$1645.99

Artisan Wall Hood W42"

PRODUCT	SPECIES	SLP
R30B42SMB1MUF1	Maple	$2054.99
R30B42SMB1CUF1	Cherry	$2157.99
R30B42SMB17UF1	Rift White Oak	$2157.99
R30B42SMB1OUF1	Red Oak	$1986.99
R30B42SMB1QUF1	Alder	$2123.99
R30B42SMB1XUF1	Paint-Grade	$1749.99

Artisan Wall Hood W48"

PRODUCT	SPECIES	SLP
R30B48SMB1MUF1	Maple	$2088.99
R30B48SMB1CUF1	Cherry	$2316.99
R30B48SMB17UF1	Rift White Oak	$2328.99
R30B48SMB1OUF1	Red Oak	$2002.99
R30B48SMB1QUF1	Alder	$2139.99
R30B48SMB1XUF1	Paint-Grade	$1827.99

Waterfall Wall Hood



36" Waterfall Wall Hood

Combining sleek, contemporary curves with precision-engineered construction, the Waterfall Wall Hood is a stunning focal point above any range. The result is a clean, contemporary profile with the refinement of a waterfall aesthetic.

- Contemporary design with modern curves
- Designed for easy installation
- Available in 36" and 42" widths, 42" height
- Available in maple, cherry, rift white oak, red oak, alder and paint-grade
- All surfaces sanded to 180 grit; ready to finish
- Installs easily using our standard French cleat hanging system
- Includes a silver metallic powder-coated liner that accommodates all BROAN® ventilation offered by Omega National Products by Rev-A-Shelf®



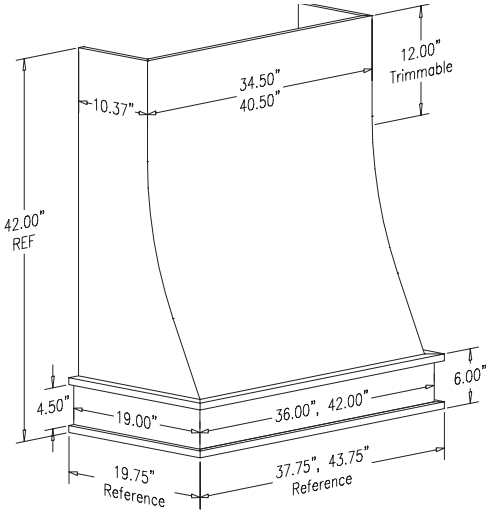

Waterfall Wall Hood W36"

PRODUCT	SPECIES	SLP
R30C36SMB1MUF1	Maple	$1893.99
R30C36SMB1CUF1	Cherry	$2047.99
R30C36SMB17UF1	Rift White Oak	$2037.99
R30C36SMB1OUF1	Red Oak	$1848.99
R30C36SMB1QUF1	Alder	$1993.99
R30C36SMB1XUF1	Paint-Grade	$1645.99

Waterfall Wall Hood W42"

PRODUCT	SPECIES	SLP
R30C42SMB1MUF1	Maple	$2054.99
R30C42SMB1CUF1	Cherry	$2157.99
R30C42SMB17UF1	Rift White Oak	$2157.99
R30C42SMB1OUF1	Red Oak	$1986.99
R30C42SMB1QUF1	Alder	$2123.99
R30C42SMB1XUF1	Paint-Grade	$1740.99

Signature Craftsman Straight Wall Hood

Embrace classic craftsmanship with the Signature Craftsman Straight Wall Hood. With clean lines and timeless proportions, it's the perfect foundation for your preferred stain or paint finish.

- Designed with flat panel valance
- Available in 30", 36", 42" and 48" widths
- Available in maple, cherry, rift white oak, red oak and alder
- All surfaces sanded to 180 grit; ready to finish
- Installs easily using our standard French cleat hanging system
- Includes a silver metallic powder-coated liner that accommodates all BROAN® ventilation offered by Omega National Products by Rev-A-Shelf®

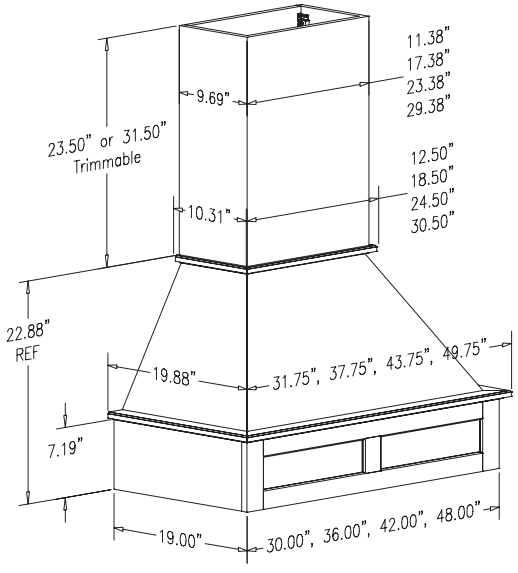



36" Signature Craftsman Straight Flat Panel Valance with Chimney (sold separately)

Designed for easy installation, featuring a removable, matching, trimmable chimney (sold separately - pg. 400)

Signature Craftsman Wall Hood Straight W30"

PRODUCT	SPECIES	SLP
R2030SMB1MUF1	Maple	$1147.99
R2030SMB1CUF1	Cherry	$1209.99
R2030SMB17UF1	Rift White Oak	$1215.99
R2030SMB1OUF1	Red Oak	$1140.99
R2030SMB1QUF1	Alder	$1209.99

Signature Craftsman Wall Hood Straight W36"

PRODUCT	SPECIES	SLP
R2036SMB1MUF1	Maple	$1214.99
R2036SMB1CUF1	Cherry	$1295.99
R2036SMB17UF1	Rift White Oak	$1302.99
R2036SMB1OUF1	Red Oak	$1211.99
R2036SMB1QUF1	Alder	$1295.99

Signature Craftsman Wall Hood Straight W42"

PRODUCT	SPECIES	SLP
R2042SMB1MUF1	Maple	$1316.99
R2042SMB1CUF1	Cherry	$1408.99
R2042SMB17UF1	Rift White Oak	$1416.99
R2042SMB1OUF1	Red Oak	$1226.99
R2042SMB1QUF1	Alder	$1408.99

Signature Craftsman Wall Hood Straight W48"

PRODUCT	SPECIES	SLP
R2048SMB1MUF1	Maple	$1364.99
R2048SMB1CUF1	Cherry	$1459.99
R2048SMB17UF1	Rift White Oak	$1466.99
R2048SMB1OUF1	Red Oak	$1262.99
R2048SMB1QUF1	Alder	$1459.99

Signature Craftsman Arched Wall Hood

Add soft sophistication with the Signature Craftsman Arched Wall Hood. The gentle arch adds dimension and elegance to any kitchen.

- Designed with flat panel valance
- Available in 30", 36", 42" and 48" widths
- Available in maple, cherry rift white oak, red oak and alder
- All surfaces sanded to 180 grit; ready to finish
- Installs easily using our standard French cleat hanging system
- Includes a silver metallic powder-coated liner that accommodates all BROAN® ventilation offered by Omega National Products by Rev-A-Shelf®

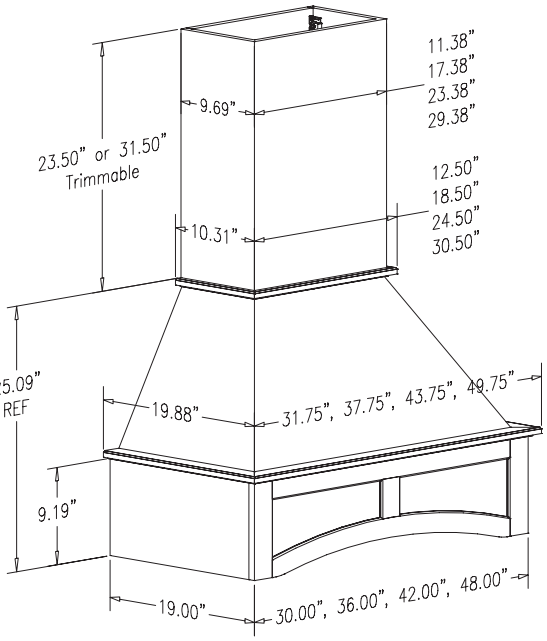



36" Signature Craftsman Arched Flat Panel Valance with Chimney (sold separately)

Designed for easy installation, featuring a removable, matching, trimmable chimney (sold separately - pg. 400)

Signature Craftsman Arched Wall Hood W30"

PRODUCT	SPECIES	SLP
R2830SMB1MUF1	Maple	$1147.99
R2830SMB1CUF1	Cherry	$1209.99
R2830SMB17UF1	Rift White Oak	$1221.99
R2830SMB1OUF1	Red Oak	$1140.99
R2830SMB1QUF1	Alder	$1215.99

Signature Craftsman Arched Wall Hood W36"

PRODUCT	SPECIES	SLP
R2836SMB1MUF1	Maple	$1214.99
R2836SMB1CUF1	Cherry	$1295.99
R2836SMB17UF1	Rift White Oak	$1308.99
R2836SMB1OUF1	Red Oak	$1211.99
R2836SMB1QUF1	Alder	$1302.99

Signature Craftsman Arched Wall Hood W42"

PRODUCT	SPECIES	SLP
R2842SMB1MUF1	Maple	$1316.99
R2842SMB1CUF1	Cherry	$1408.99
R2842SMB17UF1	Rift White Oak	$1402.99
R2842SMB1OUF1	Red Oak	$1226.99
R2842SMB1QUF1	Alder	$1416.99

Signature Craftsman Arched Wall Hood W48"

PRODUCT	SPECIES	SLP
R2848SMB1MUF1	Maple	$1371.99
R2848SMB1CUF1	Cherry	$1459.99
R2848SMB17UF1	Rift White Oak	$1452.99
R2848SMB1OUF1	Red Oak	$1268.99
R2848SMB1QUF1	Alder	$1466.99

Signature Straight Wall Hood

Clean and contemporary, the Signature Straight Wall Hood offers a streamlined look perfect for transitional and modern kitchens alike.

- Perfect for today's transitional/ contemporary styling in the kitchen
- Available in 30", 36", 42" and 48" widths
- Available in maple, cherry, rift white oak, red oak, alder and paint-grade
- All surfaces sanded to 180 grit; ready to finish
- Installs easily using our standard French cleat hanging system
- Includes a silver metallic powder-coated liner that accommodates all BROAN® ventilation offered by Omega National Products by Rev-A-Shelf®

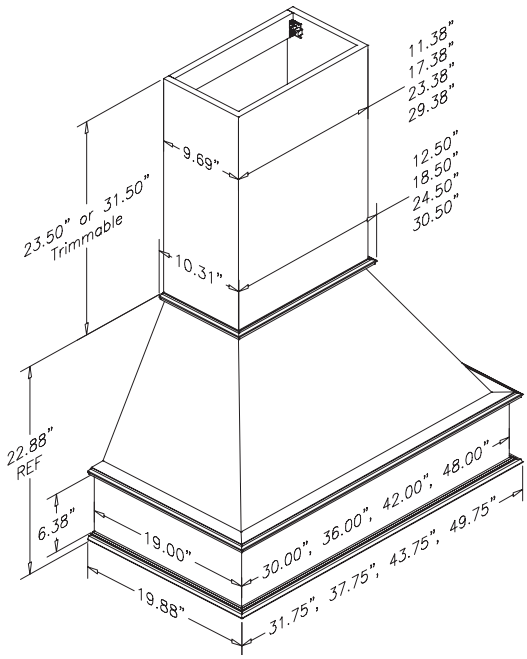



36" Signature Straight Valance w/ Chimney (sold separately)

Designed for easy installation, featuring a removable, matching, trimmable chimney (sold separately - pg. 400)

Signature Straight Wall Hood W30"

PRODUCT	SPECIES	SLP
R2130SMB1MUF1	Maple	$1204.99
R2130SMB1CUF1	Cherry	$1263.99
R2130SMB17UF1	Rift White Oak	$1270.99
R2130SMB1OUF1	Red Oak	$1191.99
R2130SMB1QUF1	Alder	$1197.99
R2130SMB1XUF1	Paint-Grade	$901.99

Signature Straight Wall Hood W36"

PRODUCT	SPECIES	SLP
R2136SMB1MUF1	Maple	$1275.99
R2136SMB1CUF1	Cherry	$1353.99
R2136SMB17UF1	Rift White Oak	$1361.99
R2136SMB1OUF1	Red Oak	$1266.99
R2136SMB1QUF1	Alder	$1280.99
R2136SMB1XUF1	Paint-Grade	$982.99

Signature Straight Wall Hood W42"

PRODUCT	SPECIES	SLP
R2142SMB1MUF1	Maple	$1376.99
R2142SMB1CUF1	Cherry	$1472.99
R2142SMB17UF1	Rift White Oak	$1472.99
R2142SMB1OUF1	Red Oak	$1281.99
R2142SMB1QUF1	Alder	$1392.99
R2142SMB1XUF1	Paint-Grade	$1076.99

Signature Straight Wall Hood W48"

PRODUCT	SPECIES	SLP
R2148SMB1MUF1	Maple	$1432.99
R2148SMB1CUF1	Cherry	$1524.99
R2148SMB17UF1	Rift White Oak	$1532.99
R2148SMB1OUF1	Red Oak	$1325.99
R2148SMB1QUF1	Alder	$1438.99
R2148SMB1XUF1	Paint-Grade	$1138.99

Signature Straight Raised Panel Wall Hood

With timeless raised panel detailing, this Signature Straight Raised Panel Wall Hood brings classic character to any space. Delivered ready to finish, it's an ideal choice for those looking to add a touch of tradition with a personalized touch.

- Designed with raised panel valance
- Available in 30", 36", 42" and 48" widths
- Available in maple, cherry, rift white oak, red oak and alder; ready to finish
- Installs easily using our standard French cleat hanging system
- Includes a silver metallic powder-coated liner that accommodates all BROAN® ventilation offered by Omega National Products by Rev-A-Shelf®

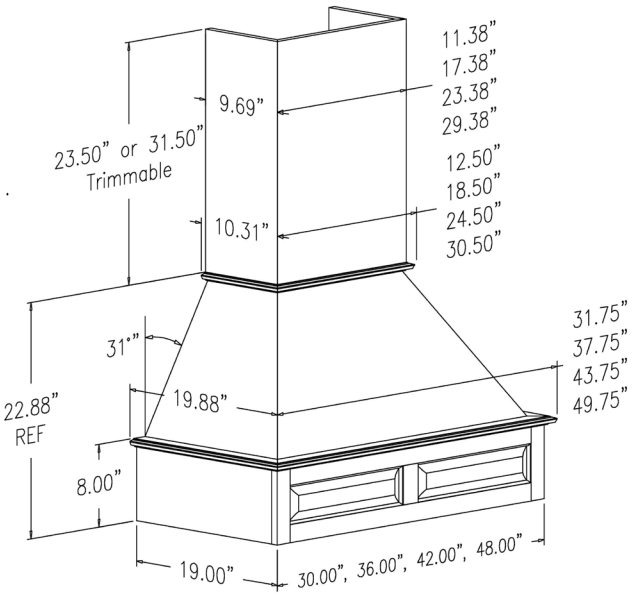



36" Signature Straight Valance w/ Chimney (sold separately)

Designed for easy installation, featuring a removable, matching, trimmable chimney (sold separately - pg. 400)

Signature Straight Raised Panel Wall Hood W30"

PRODUCT	SPECIES	SLP
R21B30SMB1MUF1	Maple	$1442.99
R21B30SMB1CUF1	Cherry	$1442.99
R21B30SMB17UF1	Rift White Oak	$1456.99
R21B30SMB1OUF1	Red Oak	$1404.99
R21B30SMB1QUF1	Alder	$1449.99

Signature Straight Raised Panel Wall Hood W36"

PRODUCT	SPECIES	SLP
R21B36SMB1MUF1	Maple	$1475.99
R21B36SMB1CUF1	Cherry	$1466.99
R21B36SMB17UF1	Rift White Oak	$1474.99
R21B36SMB1OUF1	Red Oak	$1431.99
R21B36SMB1QUF1	Alder	$1466.99

Signature Straight Raised Panel Wall Hood W42"

PRODUCT	SPECIES	SLP
R21B42SMB1MUF1	Maple	$1597.99
R21B42SMB1CUF1	Cherry	$1656.99
R21B42SMB17UF1	Rift White Oak	$1664.99
R21B42SMB1OUF1	Red Oak	$1567.99
R21B42SMB1QUF1	Alder	$1656.99

Signature Straight Raised Panel Wall Hood W48"

PRODUCT	SPECIES	SLP
R21B48SMB1MUF1	Maple	$1700.99
R21B48SMB1CUF1	Cherry	$1745.99
R21B48SMB17UF1	Rift White Oak	$1753.99
R21B48SMB1OUF1	Red Oak	$1680.99
R21B48SMB1QUF1	Alder	$1745.99

Signature Arched Raised Panel Wall Hood

With its gently arched valance and intricate raised panel detailing, this design adds graceful curves and depth to any kitchen. Thoughtfully constructed and pre-sanded, it's the perfect canvas for the finish of your choosing.

- Designed with raised panel valance
- Available in 30", 36", 42" and 48" widths
- Available in maple, cherry, rift white oak, red oak and alder
- All surfaces sanded to 180 grit; ready to finish
- Installs easily using our standard French cleat hanging system
- Includes a silver metallic powder-coated liner that accommodates all BROAN® ventilation offered by Omega National Products by Rev-A-Shelf®

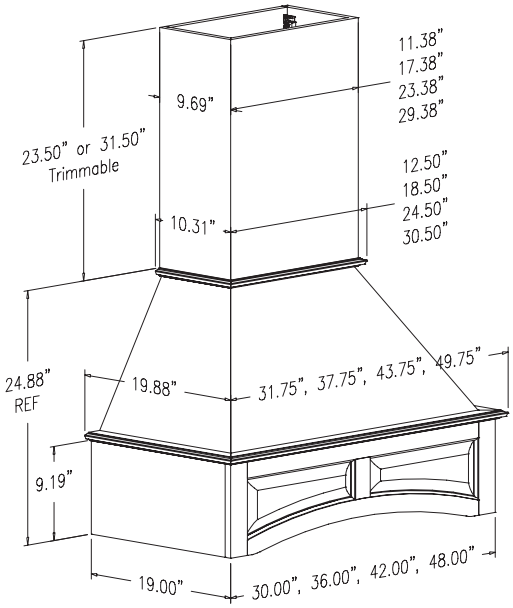



36" Signature Arched Valance w/ Chimney (sold separately)

Designed for easy installation, featuring a removable, matching, trimmable chimney (sold separately - pg. 400)

Signature Arched Raised Panel Wall Hood W30"

PRODUCT	SPECIES	SLP
R2630SMB1MUF1	Maple	$1310.99
R2630SMB1CUF1	Cherry	$1400.99
R2630SMB17UF1	Rift White Oak	$1393.99
R2630SMB1OUF1	Red Oak	$1233.99
R2630SMB1QUF1	Alder	$1342.99

Signature Arched Raised Panel Wall Hood W36"

PRODUCT	SPECIES	SLP
R2636SMB1MUF1	Maple	$1346.99
R2636SMB1CUF1	Cherry	$1437.99
R2636SMB17UF1	Rift White Oak	$1429.99
R2636SMB1OUF1	Red Oak	$1270.99
R2636SMB1QUF1	Alder	$1385.99

Signature Arched Raised Panel Wall Hood W42"

PRODUCT	SPECIES	SLP
R2642SMB1MUF1	Maple	$1405.99
R2642SMB1CUF1	Cherry	$1504.99
R2642SMB17UF1	Rift White Oak	$1497.99
R2642SMB1OUF1	Red Oak	$1331.99
R2642SMB1QUF1	Alder	$1444.99

Signature Arched Raised Panel Wall Hood W48"

PRODUCT	SPECIES	SLP
R2648SMB1MUF1	Maple	$1448.99
R2648SMB1CUF1	Cherry	$1558.99
R2648SMB17UF1	Rift White Oak	$1551.99
R2648SMB1OUF1	Red Oak	$1351.99
R2648SMB1QUF1	Alder	$1545.99

Signature Mantel Wall Hood

Make a bold statement with the Signature Mantel Wall Hood from Omega National Products by Rev-A-Shelf®. Its stately form and traditional detailing make it a centerpiece that perfectly reflects your kitchen's style.

- Available in 30" or 36" widths and 30" or 36" heights
- Available in maple, cherry and red oak
- All surfaces sanded to 180 grit; ready to finish
- Includes 4" deep mantel shelf with corbels
- Shelf and corbels come attached
- Add doors of any style to match your kitchen design
- Includes a silver metallic powder-coated liner that accommodates all BROAN® ventilation offered by Omega National Products by Rev-A-Shelf®



30" Signature Mantel Wall Hood

Signature Mantel Wall Hood W30" x H30"

PRODUCT	SPECIES	SLP
R09B30SMB1MUF1	Maple	$1324.99
R09B30SMB1CUF1	Cherry	$1329.99
R09B30SMB1OUF1	Red Oak	$1274.99

Signature Mantel Wall Hood W30" x H36"

PRODUCT	SPECIES	SLP
R09C30SMB1MUF1	Maple	$1406.99
R09C30SMB1CUF1	Cherry	$1403.99
R09C30SMB1OUF1	Red Oak	$1342.99

Signature Mantel Wall Hood W36" x H30"

PRODUCT	SPECIES	SLP
R09B36SMB1MUF1	Maple	$1369.99
R09B36SMB1CUF1	Cherry	$1382.99
R09B36SMB1OUF1	Red Oak	$1320.99

Signature Mantel Wall Hood W36" x H36"

PRODUCT	SPECIES	SLP
R09C36SMB1MUF1	Maple	$1451.99
R09C36SMB1CUF1	Cherry	$1457.99
R09C36SMB1OUF1	Red Oak	$1388.99

Note: this hood attaches using standard cabinet mounting methods

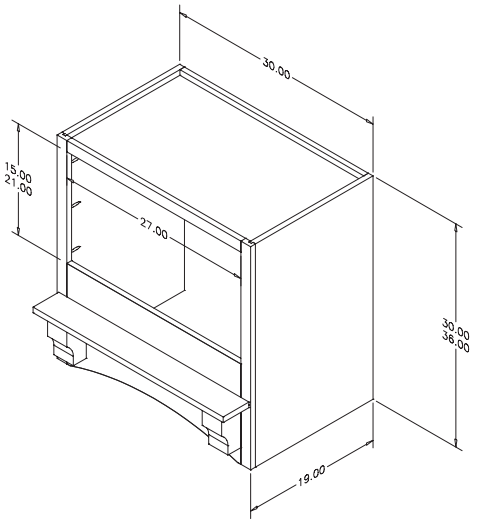

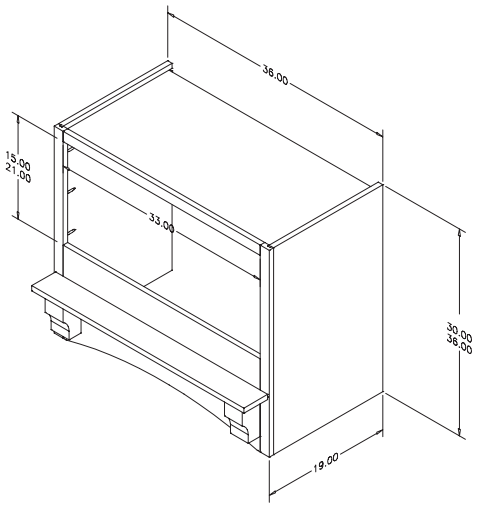

Modern Tapered Wall Hood

Defined by clean angles and contemporary appeal, the Modern Tapered Wall Hood is a sleek focal point for today's kitchens. Its minimalist design makes it easy to blend with both bold and understated styles.

- Perfect for today's transitional/ contemporary styling in the kitchen
- Available in 30", 36", 42" and 48" widths
- Available in maple, cherry, rift white oak, red oak, alder and paint-grade
- All surfaces sanded to 180 grit; ready to finish
- Installs easily using our standard French cleat hanging system
- Includes a silver metallic powder-coated liner that accommodates all BROAN® ventilation offered by Omega National Products by Rev-A-Shelf®

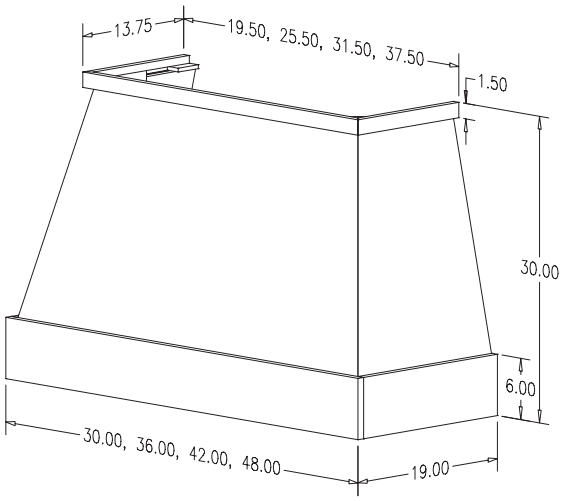



30" Modern Tapered Hood with Chimney (sold separately)

Designed for easy installation, featuring a removable, matching, trimmable chimney (sold separately - pg. 401)

Modern Tapered Wall Hood W30"

PRODUCT	SPECIES	SLP
R29T030SMB1MUF1	Maple	$1147.99
R29T030SMB1CUF1	Cherry	$1147.99
R29T030SMB17UF1	Rift White Oak	$1147.99
R29T030SMB1OUF1	Red Oak	$1118.99
R29T030SMB1QUF1	Alder	$1215.99
R29T030SMB1XUF1	Paint-Grade	$964.99

Modern Tapered Wall Hood W36"

PRODUCT	SPECIES	SLP
R29T036SMB1MUF1	Maple	$1159.99
R29T036SMB1CUF1	Cherry	$1189.99
R29T036SMB17UF1	Rift White Oak	$1189.99
R29T036SMB1OUF1	Red Oak	$1153.99
R29T036SMB1QUF1	Alder	$1471.99
R29T036SMB1XUF1	Paint-Grade	$1000.99

Modern Tapered Wall Hood W42"

PRODUCT	SPECIES	SLP
R29T042SMB1MUF1	Maple	$1263.99
R29T042SMB1CUF1	Cherry	$1307.99
R29T042SMB17UF1	Rift White Oak	$1307.99
R29T042SMB1OUF1	Red Oak	$1256.99
R29T042SMB1QUF1	Alder	$1378.99
R29T042SMB1XUF1	Paint-Grade	$1112.99

Modern Tapered Wall Hood W48"

PRODUCT	SPECIES	SLP
R29T048SMB1MUF1	Maple	$1301.99
R29T048SMB1CUF1	Cherry	$1337.99
R29T048SMB17UF1	Rift White Oak	$1337.99
R29T048SMB1OUF1	Red Oak	$1295.99
R29T048SMB1QUF1	Alder	$1419.99
R29T048SMB1XUF1	Paint-Grade	$1162.99

Modern Farmhouse Shiplap Tapered Wall Hood

Rustic charm meets modern simplicity in this shiplap-style tapered hood. Whether you're aiming for a cozy farmhouse feel or transitional warmth, this piece brings texture and personality to your space.

- Perfect for today's transitional/ contemporary styling in the kitchen
- Available in 30", 36", 42" and 48" widths
- Available in maple, cherry, rift white oak, red oak, alder and paint-grade
- All surfaces sanded to 180 grit; ready to finish
- Installs easily using our standard French cleat hanging system
- Includes a silver metallic powder-coated liner that accommodates all BROAN® ventilation offered by Omega National Products by Rev-A-Shelf®

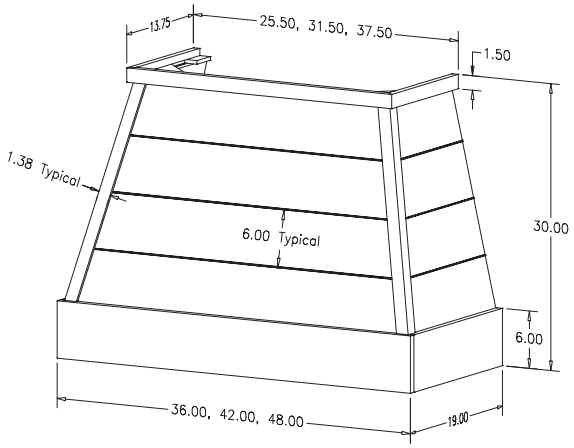



30" Modern Farmhouse Shiplap Tapered Hood with Chimney (sold separately)

Designed for easy installation, featuring a removable, matching, trimmable chimney (sold separately - pg. 402)

Modern Farmhouse Shiplap Tapered Wall Hood W30"

PRODUCT	SPECIES	SLP
R19T030SMB1MUF1	Maple	$1064.99
R19T030SMB1CUF1	Cherry	$1082.99
R19T030SMB17UF1	Rift White Oak	$1082.99
R19T030SMB1OUF1	Red Oak	$1069.99
R19T030SMB1QUF1	Alder	$1187.99
R19T030SMB1XUF1	Paint-Grade	$1011.99

Modern Farmhouse Shiplap Tapered Wall Hood W36"

PRODUCT	SPECIES	SLP
R19T036SMB1MUF1	Maple	$1084.99
R19T036SMB1CUF1	Cherry	$1073.99
R19T036SMB17UF1	Rift White Oak	$1073.99
R19T036SMB1OUF1	Red Oak	$1126.99
R19T036SMB1QUF1	Alder	$1208.99
R19T036SMB1XUF1	Paint-Grade	$1031.99

Modern Farmhouse Shiplap Tapered Wall Hood W42"

PRODUCT	SPECIES	SLP
R19T042SMB1MUF1	Maple	$1189.99
R19T042SMB1CUF1	Cherry	$1185.99
R19T042SMB17UF1	Rift White Oak	$1185.99
R19T042SMB1OUF1	Red Oak	$1215.99
R19T042SMB1QUF1	Alder	$1358.99
R19T042SMB1XUF1	Paint-Grade	$1126.99

Modern Farmhouse Shiplap Tapered Wall Hood W48"

PRODUCT	SPECIES	SLP
R19T048SMB1MUF1	Maple	$1213.99
R19T048SMB1CUF1	Cherry	$1193.99
R19T048SMB17UF1	Rift White Oak	$1193.99
R19T048SMB1OUF1	Red Oak	$1235.99
R19T048SMB1QUF1	Alder	$1384.99
R19T048SMB1XUF1	Paint-Grade	$1153.99

Modern Straight Wall Hood

Bold and architectural, the Modern Straight Wall Hood delivers striking lines and a strong presence. It's a natural fit for elevated, design-forward kitchens that prioritize clean form and function.

- Perfect for today's transitional/ contemporary styling in the kitchen
- Available in 36", 42" and 48" widths
- Available in maple, cherry, rift white oak, red oak and alder
- All surfaces sanded to 180 grit; ready to finish
- Installs easily using our standard French cleat hanging system
- Includes a silver metallic powder-coated liner that accommodates all BROAN® ventilation offered by Omega National Products by Rev-A-Shelf®

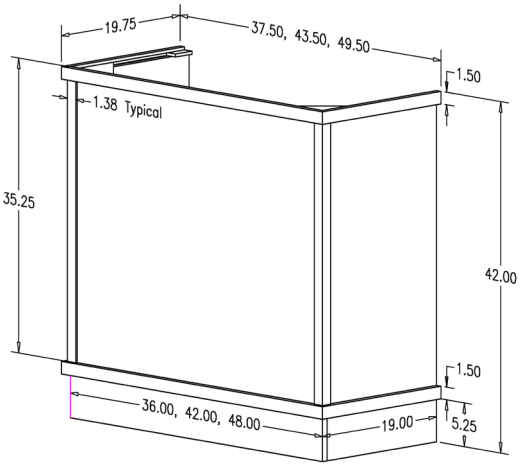



36" Modern Wall Hood

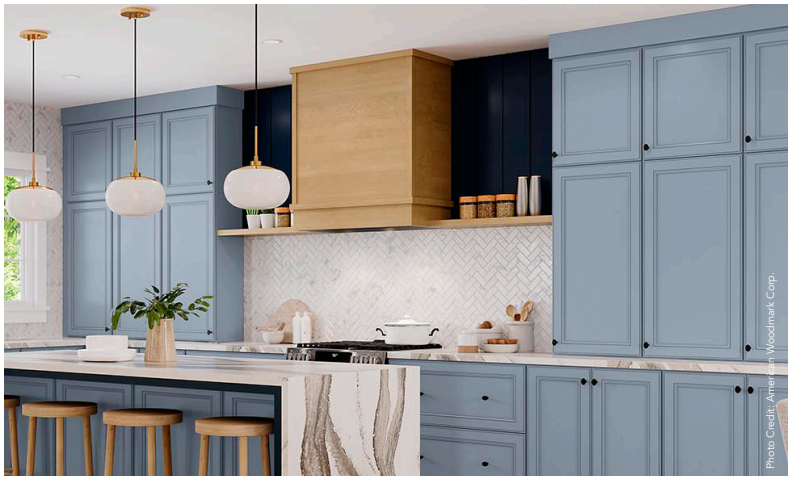

Modern Straight Wall Hood W36"

PRODUCT	SPECIES	SLP
R29SS036SMB1MUF1	Maple	$1556.99
R29SS036SMB1CUF1	Cherry	$1626.99
R29SS036SMB17UF1	Rift White Oak	$1634.99
R29SS036SMB1OUF1	Red Oak	$1526.99
R29SS036SMB1QUF1	Alder	$1634.99

Modern Straight Wall Hood W42"

PRODUCT	SPECIES	SLP
R29SS042SMB1MUF1	Maple	$1685.99
R29SS042SMB1CUF1	Cherry	$1759.99
R29SS042SMB17UF1	Rift White Oak	$1759.99
R29SS042SMB1OUF1	Red Oak	$1626.99
R29SS042SMB1QUF1	Alder	$1804.99

Modern Straight Wall Hood W48"

PRODUCT	SPECIES	SLP
R29SS048SMB1MUF1	Maple	$1715.99
R29SS048SMB1CUF1	Cherry	$1804.99
R29SS048SMB17UF1	Rift White Oak	$1812.99
R29SS048SMB1OUF1	Red Oak	$1685.99
R29SS048SMB1QUF1	Alder	$1827.99

Modern Farmhouse Shiplap Straight Wall Hood

For those who love a hint of texture, the Shiplap Straight Wall Hood offers a laid-back yet tailored look. The easy linear detail brings depth without overpowering the surrounding cabinetry

- Perfect for today's transitional/ contemporary styling in the kitchen
- Available in 36", 42" and 48" widths
- Available in maple, cherry, rift white oak, red oak and alder
- All surfaces sanded to 180 grit; ready to finish
- Design allows for trimming to desired height
- Installs easily using our standard French cleat hanging system
- Includes a silver metallic powder-coated liner that accommodates all BROAN® ventilation offered by Omega National Products by Rev-A-Shelf®

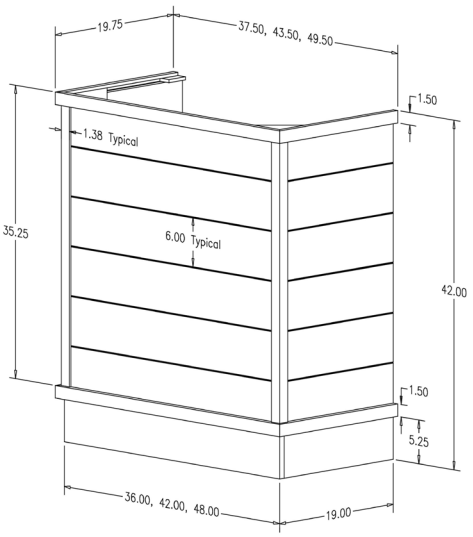



36" Modern Farmhouse Shiplap Wall Hood

Modern Farmhouse Shiplap Straight Wall Hood W36"

PRODUCT	SPECIES	SLP
R19SS036SMB1MUF1	Maple	$1556.99
R19SS036SMB1CUF1	Cherry	$1626.99
R19SS036SMB17UF1	Rift White Oak	$1634.99
R19SS036SMB1OUF1	Red Oak	$1526.99
R19SS036SMB1QUF1	Alder	$1634.99

Modern Farmhouse Shiplap Straight Wall Hood W42"

PRODUCT	SPECIES	SLP
R19SS042SMB1MUF1	Maple	$1685.99
R19SS042SMB1CUF1	Cherry	$1759.99
R19SS042SMB17UF1	Rift White Oak	$1768.99
R19SS042SMB1OUF1	Red Oak	$1626.99
R19SS042SMB1QUF1	Alder	$1812.99

Modern Farmhouse Shiplap Straight Wall Hood W48"

PRODUCT	SPECIES	SLP
R19SS048SMB1MUF1	Maple	$1715.99
R19SS048SMB1CUF1	Cherry	$1804.99
R19SS048SMB17UF1	Rift White Oak	$1812.99
R19SS048SMB1OUF1	Red Oak	$1653.00
R19SS048SMB1QUF1	Alder	$1827.99

Euro Wood Wall Hood

Simple and versatile, the Euro Wood Wall Hood features a bold profile that works perfectly in a variety of spaces... from transitional to contemporary! Its adaptable design makes it a go-to choice for custom kitchens.

- Perfect for today's transitional/ contemporary styling in the kitchen
- Available in 30", 36" and 42" widths
- Available in maple, cherry, rift white oak, red oak and alder
- All surfaces sanded to 180 grit; ready to finish
- Compatible with Signature Hood Chimneys up to 42" width (sold separately)
- Installs easily using our standard French cleat hanging system
- Includes a silver metallic powder-coated liner that accommodates all BROAN® ventilation offered by Omega National Products by Rev-A-Shelf®

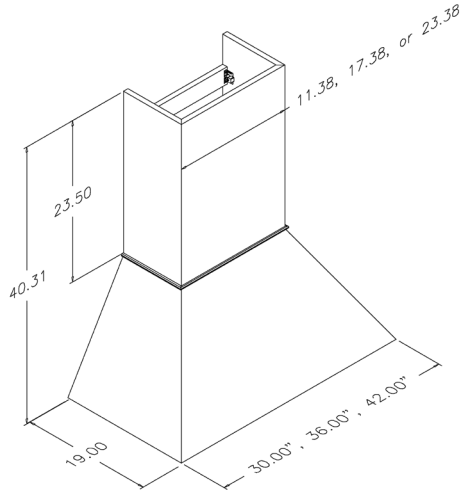



36" Euro Wood Hood with Chimney



Designed for easy installation, featuring a removable, matching, trimmable chimney (sold separately - pg. 397)

Euro Wood Wall Hood W30"

PRODUCT	SPECIES	SLP
R3330SMB3MUF1	Maple	$811.99
R3330SMB3CUF1	Cherry	$839.99
R3330SMB37UF1	Rift White Oak	$842.99
R3330SMB3OUF1	Red Oak	$808.99
R3330SMB3QUF1	Alder	$856.99

Euro Wood Wall Hood W36"

PRODUCT	SPECIES	SLP
R3336SMB3MUF1	Maple	$860.99
R3336SMB3CUF1	Cherry	$877.99
R3336SMB37UF1	Rift White Oak	$877.99
R3336SMB3OUF1	Red Oak	$842.99
R3336SMB3QUF1	Alder	$901.99

Euro Wood Wall Hood W42"

PRODUCT	SPECIES	SLP
R3342SMB3MUF1	Maple	$894.99
R3342SMB3CUF1	Cherry	$911.99
R3342SMB37UF1	Rift White Oak	$902.99
R3342SMB3OUF1	Red Oak	$866.99
R3342SMB3QUF1	Alder	$939.99

Signature Wall Hood Chimney

Designed to pair seamlessly with our Signature and Euro Wood Wall Hoods, these chimneys offer an easy way to add height, character and a polished finish. Available in multiple sizes and wood species for a tailored fit.

- Designed to fit Signature and Euro Wood Wall Hoods (sold separately pgs. 12-17 and 22)
- Available in 30", 36", 42" and 48" wide wall hoods
- Available in maple, cherry, rift white oak, red oak, alder and paint-grade
- All surfaces sanded to 180 grit; ready to finish
- Available in Standard (23-1/2") or Tall (31-1/2") heights
- Includes (1) Signature Chimney and (2) Chimney Mounting Boards
- Chimneys are trimmable to desired height

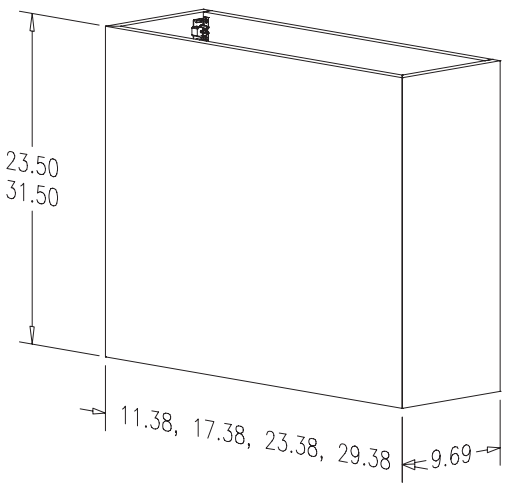



(1) Signature Chimney + (2) Chimney Mounting Boards

Signature/Euro Hood Chimney W30"

STANDARD PART # 23-1/2"H	SLP	TALL PART # - 31-1/2"H	SLP	SPECIES
RCH30MUF1	$250.99	RCHT30MUF1	$277.99	Maple
RCH30CUF1	$253.99	RCHT30CUF1	$277.99	Cherry
RCH307UF1	$253.99	RCHT307UF1	$278.99	Rift White Oak
RCH30OUF1	$234.99	RCHT30OUF1	$251.99	Red Oak
RCH30QUF1	$246.99	RCHT30QUF1	$281.99	Alder
RCH30XUF1	$190.99	RCHT30XUF1	$227.99	Paint-Grade

Signature/Euro Hood Chimney W36"

STANDARD PART # 23-1/2"H	SLP	TALL PART # - 31-1/2"H	SLP	SPECIES
RCH36MUF1	$254.99	RCHT36MUF1	$327.99	Maple
RCH36CUF1	$268.99	RCHT36CUF1	$334.99	Cherry
RCH367UF1	$269.99	RCHT367UF1	$334.99	Rift White Oak
RCH36OUF1	$246.99	RCHT36OUF1	$308.99	Red Oak
RCH36QUF1	$272.99	RCHT36QUF1	$329.99	Alder
RCH36XUF1	$199.80	RCHT36XUF1	$271.99	Paint-Grade

Signature/Euro Hood Chimney W42"

STANDARD PART # 23-1/2"H	SLP	TALL PART # - 31-1/2"H	SLP	SPECIES
RCH42MUF1	$283.99	RCHT42MUF1	$335.99	Maple
RCH42CUF1	$292.99	RCHT42CUF1	$340.99	Cherry
RCH427UF1	$293.99	RCHT427UF1	$339.99	Rift White Oak
RCH42OUF1	$265.99	RCHT42OUF1	$316.99	Red Oak
RCH42QUF1	$298.99	RCHT42QUF1	$337.99	Alder
RCH42XUF1	$240.99	RCHT42XUF1	$280.99	Paint-Grade

Signature Hood Chimney W48" *

STANDARD PART # 23-1/2"H	SLP	TALL PART # - 31-1/2"H	SLP	SPECIES
RCH48MUF1	$309.99	RCHT48MUF1	$402.99	Maple
RCH48CUF1	$319.99	RCHT48CUF1	$425.99	Cherry
RCH487UF1	$319.99	RCHT487UF1	$425.99	Rift White Oak
RCH48OUF1	$286.99	RCHT48OUF1	$386.99	Red Oak
RCH48QUF1	$324.99	RCHT48QUF1	$415.99	Alder
RCH48XUF1	$259.99	RCHT48XUF1	$324.99	Paint-Grade

Size Not Available for Euro Hoods*

Modern Tapered Wall Hood Chimney



Modern Tapered Hood Chimney

Built to complement the Modern Tapered Wall Hood, this chimney offers clean symmetry and customizable height. It is a perfect finishing element for those seeking a streamlined look.

- Designed to fit Modern Tapered Hood (sold separately pg. 18)
- Available in 30", 36", 42" and 48" wide wall hoods
- Available in Standard (24-3/4") height
- Available in maple, cherry, rift white oak, red oak, alder and paint-grade
- All surfaces sanded to 180 grit; ready to finish
- Includes (1) Modern Tapered Hood Chimney and (2) Chimney Mounting Boards
- Chimneys are trimmable to desired height

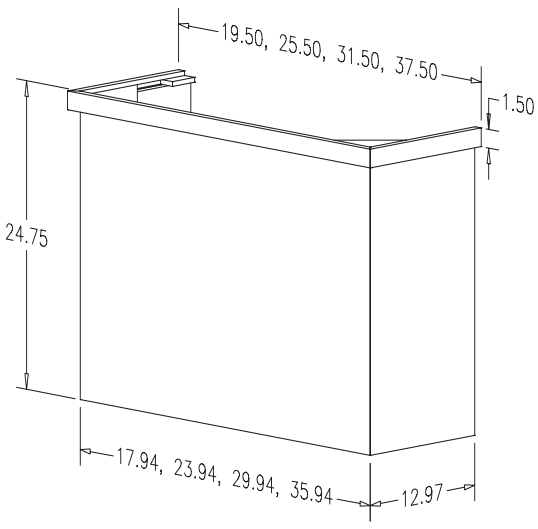

Modern Tapered Hood Chimney W30"

STANDARD PART # 24-3/4"H	SPECIES	SLP
RCH29T030MUF1	Maple	$553.99
RCH29T030CUF1	Cherry	$565.99
RCH29T0307UF1	Rift White Oak	$565.99
RCH29T030OUF1	Red Oak	$559.99
RCH29T030QUF1	Alder	$588.99
RCH29T030XUF1	Paint-Grade	$464.99

Modern Tapered Hood Chimney W36"

STANDARD PART # 24-3/4"H	SPECIES	SLP
RCH29T036MUF1	Maple	$600.99
RCH29T036CUF1	Cherry	$617.99
RCH29T0367UF1	Rift White Oak	$617.99
RCH29T036OUF1	Red Oak	$600.99
RCH29T036QUF1	Alder	$647.99
RCH29T036XUF1	Paint-Grade	$517.99

Modern Tapered Hood Chimney W42"

STANDARD PART # 24-3/4"H	SPECIES	SLP
RCH29T042MUF1	Maple	$632.99
RCH29T042CUF1	Cherry	$662.99
RCH29T0427UF1	Rift White Oak	$662.99
RCH29T042OUF1	Red Oak	$632.99
RCH29T042QUF1	Alder	$694.99
RCH29T042XUF1	Paint-Grade	$535.99

Modern Tapered Hood Chimney W48"

STANDARD PART # 24-3/4"H	SPECIES	SLP
RCH29T048MUF1	Maple	$647.99
RCH29T048CUF1	Cherry	$676.99
RCH29T0487UF1	Rift White Oak	$676.99
RCH29T048OUF1	Red Oak	$647.99
RCH29T048QUF1	Alder	$709.99
RCH29T048XUF1	Paint-Grade	$559.99

Tapered Farmhouse Wall Hood Chimney



30" Tapered Farmhouse Wall Hood Chimney

This chimney adds warmth and dimension to our Modern Farmhouse designs, with just the right amount of rustic detail. It completes the look while keeping installation easy and flexible.

- Designed to fit Modern Farmhouse Shiplap Tapered Hood (sold separately pg. 19)
- Designed to fit 30", 36", 42" and 48" hood widths
- Available in Standard (24-3/4") height
- Available in maple, cherry, rift white oak, red oak, alder and paint-grade
- All surfaces sanded to 180 grit; ready to finish
- Includes (1) Tapered Farmhouse Hood Chimney and (2) Chimney Mounting Boards
- Chimneys are trimmable to desired height

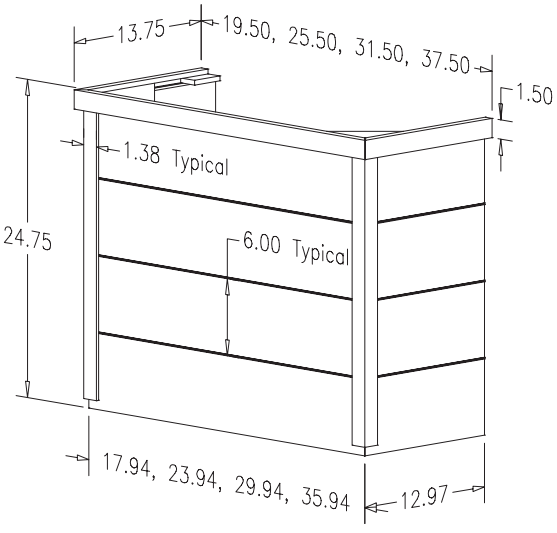

Tapered Farmhouse Hood Chimney W30"

STANDARD PART # 24-3/4"H	SPECIES	SLP
RCH19T030MUF1	Maple	$466.99
RCH19T030CUF1	Cherry	$460.99
RCH19T0307UF1	Rift White Oak	$463.99
RCH19T030OUF1	Red Oak	$445.99
RCH19T030QUF1	Alder	$478.99
RCH19T030XUF1	Paint-Grade	$444.99

Tapered Farmhouse Hood Chimney W36"

STANDARD PART # 24-3/4"H	SPECIES	SLP
RCH19T036MUF1	Maple	$474.99
RCH19T036CUF1	Cherry	$469.99
RCH19T0367UF1	Rift White Oak	$469.99
RCH19T036OUF1	Red Oak	$450.99
RCH19T036QUF1	Alder	$485.99
RCH19T036XUF1	Paint-Grade	$450.99

Tapered Farmhouse Hood Chimney W42"

STANDARD PART # 24-3/4"H	SPECIES	SLP
RCH19T042MUF1	Maple	$482.99
RCH19T042CUF1	Cherry	$474.99
RCH19T0427UF1	Rift White Oak	$477.99
RCH19T042OUF1	Red Oak	$455.99
RCH19T042QUF1	Alder	$496.99
RCH19T042XUF1	Paint-Grade	$464.99

Tapered Farmhouse Hood Chimney W48"

STANDARD PART # 24-3/4"H	SPECIES	SLP
RCH19T048MUF1	Maple	$543.99
RCH19T048CUF1	Cherry	$533.99
RCH19T0487UF1	Rift White Oak	$533.99
RCH19T048OUF1	Red Oak	$509.99
RCH19T048QUF1	Alder	$559.99
RCH19T048XUF1	Paint-Grade	$526.99

Hood Installation

Easy Install!

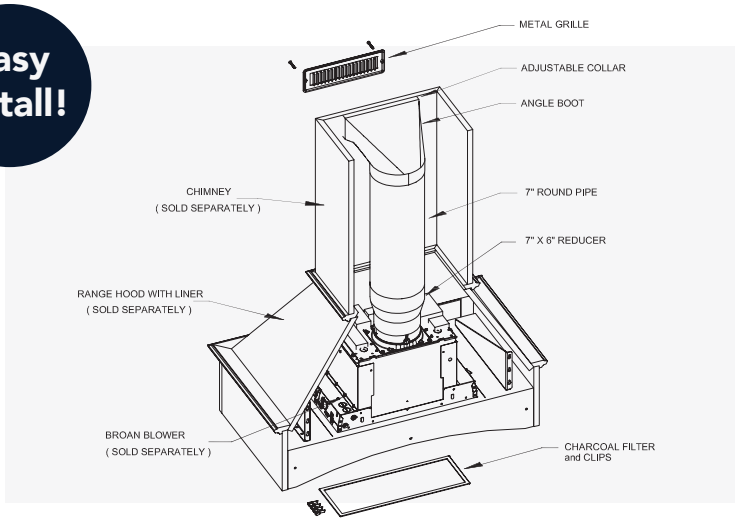

Note: Ductless Kit not recommended for use with 30" hood chimney

Turn-Key Wood Wall Hood System Includes:

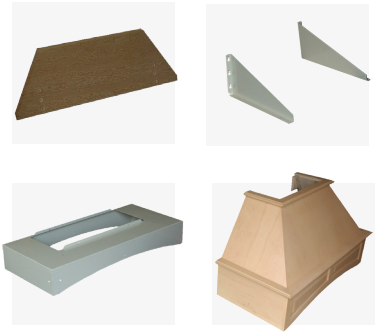

- (1) Mounting Board
- (2) Mounting Brackets
- (1) Wall Hood Liner
- (1) Wall Hood

Chimney Kit includes:



- (1) Chimney
- (2) Chimney Mounting Boards (Signature only)

1.

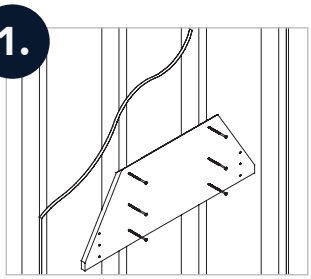

Screw mounting plate to wall

2.

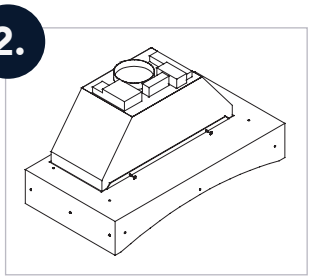

Assemble blower unit (sold separately) to metal liner

3.

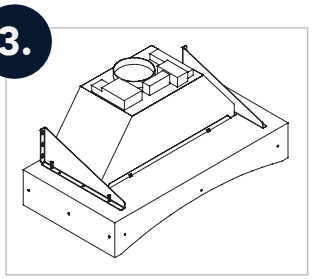

Fasten metal mounting brackets to liner

4.

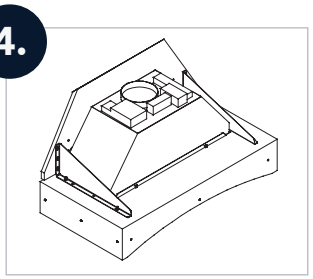

Hang the liner/bracket assembly on the mounting plate (make all electrical and ventilation connections at this point)

5.

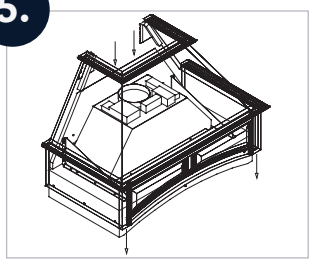

Slip the Wood Wall Hood on top of the mounting plate

6.

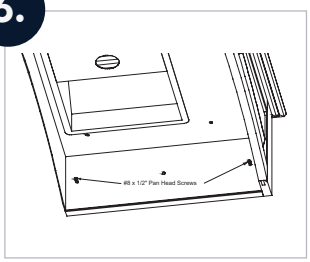

Fasten Wall Hood to liner w/ (4) screws

7.

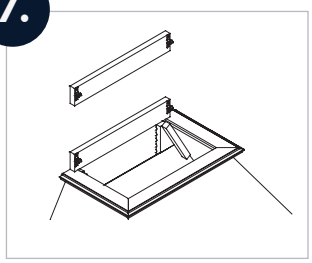

If using a chimney (sold separately), mount blocks to wall

8.

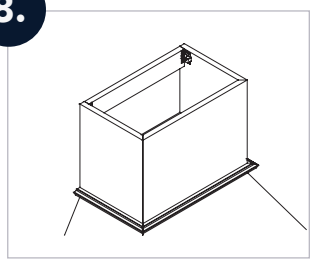

Snap chimney in place



Canopy Hoods

Verona | Omni | Estate | Accent | Select | Omega | Classic

Classic Canopy Hood

True to its name, the Classic Canopy Hood features traditional details and enduring charm. With familiar lines and a refined profile, it complements a wide range of cabinetry and interior styles.

- Clean and contemporary styling
- Available in 30" and 36" widths
- Available in maple, cherry, rift white oak, red oak and alder
- All surfaces sanded to 180 grit; ready to finish
- Manufactured from solid wood and wood veneer
- Mounts between wall cabinets
- Includes a silver metallic powder-coated liner that accommodates all BROAN® ventilation offered by Omega National Products by Rev-A-Shelf®

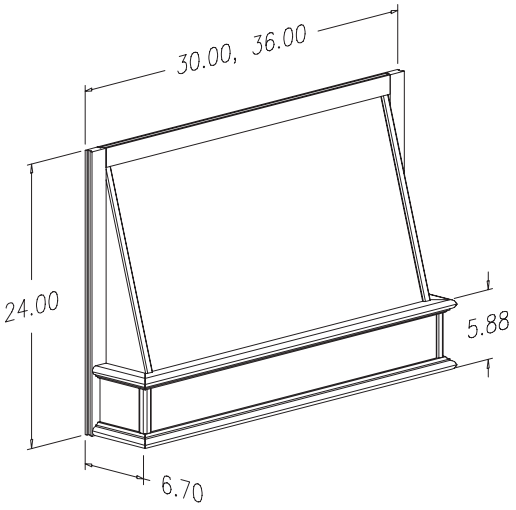



30" Classic Canopy

Classic Canopy Hood W30"

PRODUCT	SPECIES	SLP
R70302SMB1MUF1	Maple	$561.99
R70302SMB1CUF1	Cherry	$623.99
R70302SMB17UF1	Rift White Oak	$623.99
R70302SMB1OUF1	Red Oak	$525.99
R70302SMB1QUF1	Alder	$580.99

Classic Canopy Hood W36"

PRODUCT	SPECIES	SLP
R70362SMB1MUF1	Maple	$655.99
R70362SMB1CUF1	Cherry	$712.99
R70362SMB17UF1	Rift White Oak	$712.99
R70362SMB1OUF1	Red Oak	$609.99
R70362SMB1QUF1	Alder	$649.99

Estate Canopy Hood

Designed to impress, the Estate Canopy Hood delivers grandeur with its stately presence and refined details - scaled perfectly for spaces with lower ceilings. It's the ideal showpiece for your elevated, high-end designs.

- Perfect for today's transitional/ contemporary styling in the kitchen
- Available in 30" and 36" widths
- Available in 24", 30 and 36" heights
- Available in maple, cherry, rift white oak, red oak and alder
- All surfaces sanded to 180 grit; ready to finish
- Mounts between wall cabinets
- Includes a silver metallic powder-coated liner that accommodates all BROAN® ventilation offered by Omega National Products by Rev-A-Shelf®

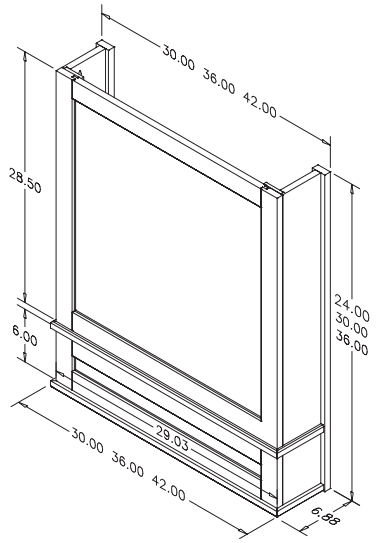

Available in 1, 2 or 3 panel options



36" Estate Canopy



30" 2-Panel Estate Canopy Hood



42" 3-Panel Estate Canopy Hood



Estate Canopy - 1 Panel - W30" x H24"

PRODUCT	SPECIES	SLP
R19C830SMB1MUF1	Maple	$1010.99
R19C830SMB1CUF1	Cherry	$1020.99
R19C830SMB17UF1	Rift White Oak	$1030.99
R19C830SMB1OUF1	Red Oak	$934.99
R19C830SMB1QUF1	Alder	$1010.99

Estate Canopy - 1 Panel - W36" x H24"

PRODUCT	SPECIES	SLP
R19C836SMB1MUF1	Maple	$1144.99
R19C836SMB1CUF1	Cherry	$1069.99
R19C836SMB17UF1	Rift White Oak	$1085.99
R19C836SMB1OUF1	Red Oak	$1058.99
R19C836SMB1QUF1	Alder	$1141.99

Estate Canopy - 2 Panel - W30" x H30"

PRODUCT	SPECIES	SLP
R19C530SMB1MUF1	Maple	$1044.99
R19C530SMB1CUF1	Cherry	$1144.99
R19C530SMB17UF1	Rift White Oak	$1150.99
R19C530SMB1OUF1	Red Oak	$949.99
R19C530SMB1QUF1	Alder	$1057.99

Estate Canopy - 2 Panel - W36" x H30"

PRODUCT	SPECIES	SLP
R19C536SMB1MUF1	Maple	$1171.99
R19C536SMB1CUF1	Cherry	$1147.99
R19C536SMB17UF1	Rift White Oak	$1158.99
R19C536SMB1OUF1	Red Oak	$1079.99
R19C536SMB1QUF1	Alder	$1230.99

Estate Canopy - 3 Panel - W30" x H36"

PRODUCT	SPECIES	SLP
R19C930SMB1MUF1	Maple	$1134.99
R19C930SMB1CUF1	Cherry	$1174.99
R19C930SMB17UF1	Rift White Oak	$1168.99
R19C930SMB1OUF1	Red Oak	$1034.99
R19C930SMB1QUF1	Alder	$1200.99

Estate Canopy - 3 Panel - W36" x H36"

PRODUCT	SPECIES	SLP
R19C936SMB1MUF1	Maple	$1272.99
R19C936SMB1CUF1	Cherry	$1248.99
R19C936SMB17UF1	Rift White Oak	$1260.99
R19C936SMB1OUF1	Red Oak	$1164.99
R19C936SMB1QUF1	Alder	$1355.99

Estate Canopy - 3 Panel - W42" x H36"

PRODUCT	SPECIES	SLP
R19C942SMB1MUF1	Maple	$1616.99
R19C942SMB1CUF1	Cherry	$1588.99
R19C942SMB17UF1	Rift White Oak	$1588.99
R19C942SMB1OUF1	Red Oak	$1574.99
R19C942SMB1QUF1	Alder	$1934.99

Straight Accent Canopy Hood

Simple and sophisticated, the Straight Accent Canopy Hood is ideal for streamlined spaces. Its low profile offers a clean look while maintaining the craftsmanship and quality you expect.

- An economical alternative to standalone hoods
- Available in 30" and 36" widths, straight valances
- Available in 24", 30" and 36" height
- Available in maple, cherry, rift white oak, red oak and alder
- All surfaces sanded to 180 grit; ready to finish
- Simply attaches to adjacent cabinets
- Add cabinet doors or design panels above valance to create custom look (cabinet doors not included)
- Includes a silver metallic powder-coated liner that accommodates all BROAN® ventilation offered by Omega National Products by Rev-A-Shelf®



36" Straight Accent Canopy Hood



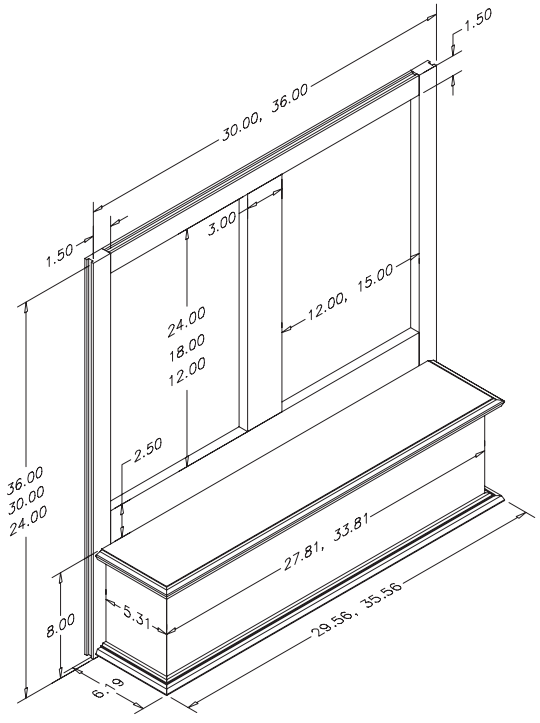



Straight Accent Canopy Hood W30" x H24"

PRODUCT	SPECIES	SLP
R4030SMB1MUF1	Maple	$401.99
R4030SMB1CUF1	Cherry	$432.99
R4030SMB17UF1	Rift White Oak	$432.99
R4030SMB1OUF1	Red Oak	$380.99
R4030SMB1QUF1	Alder	$432.99

Straight Accent Canopy Hood W36" x H24"

PRODUCT	SPECIES	SLP
R4036SMB1MUF1	Maple	$519.99
R4036SMB1CUF1	Cherry	$533.99
R4036SMB17UF1	Rift White Oak	$536.99
R4036SMB1OUF1	Red Oak	$501.99
R4036SMB1QUF1	Alder	$546.99

Straight Accent Canopy Hood W30" x H30"

PRODUCT	SPECIES	SLP
R5030SMB1MUF1	Maple	$421.99
R5030SMB1CUF1	Cherry	$451.99
R5030SMB17UF1	Rift White Oak	$446.99
R5030SMB1OUF1	Red Oak	$398.99
R5030SMB1QUF1	Alder	$453.99

Straight Accent Canopy Hood W36" x H30"

PRODUCT	SPECIES	SLP
R5036SMB1MUF1	Maple	$545.99
R5036SMB1CUF1	Cherry	$554.99
R5036SMB17UF1	Rift White Oak	$554.99
R5036SMB1OUF1	Red Oak	$528.99
R5036SMB1QUF1	Alder	$570.99

Straight Accent Canopy Hood W30" x H36"

PRODUCT	SPECIES	SLP
R5230SMB1MUF1	Maple	$442.99
R5230SMB1CUF1	Cherry	$472.99
R5230SMB17UF1	Rift White Oak	$467.99
R5230SMB1OUF1	Red Oak	$417.99
R5230SMB1QUF1	Alder	$474.99

Straight Accent Canopy Hood W36" x H36"

PRODUCT	SPECIES	SLP
R5236SMB1MUF1	Maple	$565.99
R5236SMB1CUF1	Cherry	$580.99
R5236SMB17UF1	Rift White Oak	$575.99
R5236SMB1OUF1	Red Oak	$548.99
R5236SMB1QUF1	Alder	$591.99

Arched Accent Canopy Hood

The Arched Accent Canopy Hood blends gentle curves with a compact footprint, making it an elegant choice for smaller spaces. Its subtle arch adds warmth and character without overwhelming the design.

- An economical alternative to standalone hoods
- Available in 30" and 36" widths
- Available in 24" and 30" heights
- Available in maple, cherry, rift white oak, red oak and alder; ready to finish
- All surfaces sanded to 180 grit; ready to finish
- Simply attaches to adjacent cabinets
- Add cabinet doors or design panels above valance to create custom look (cabinet doors not included)
- Includes a silver metallic powder-coated liner that accommodates all BROAN® ventilation offered by Omega National Products by Rev-A-Shelf®



24" Arched Accent Canopy



30" Arched Accent Canopy

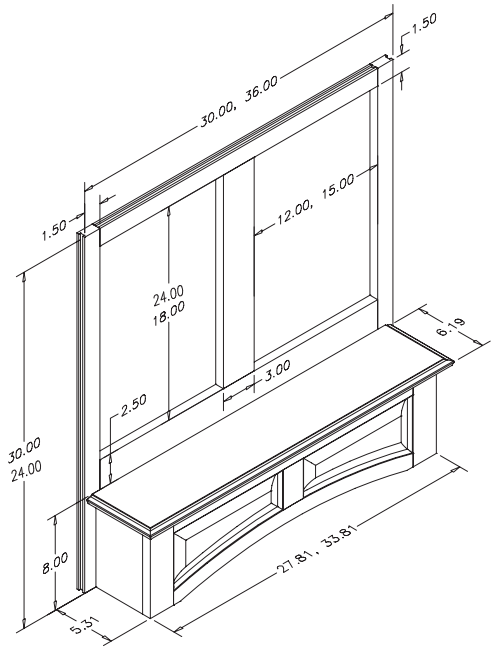



Arched Accent Canopy Hood W30" x H24"

PRODUCT	SPECIES	SLP
R4130SMB1MUF1	Maple	$525.99
R4130SMB1CUF1	Cherry	$591.99
R4130SMB17UF1	Rift White Oak	$594.99
R4130SMB1OUF1	Red Oak	$477.99
R4130SMB1QUF1	Alder	$584.99

Arched Accent Canopy Hood W30" x H30"

PRODUCT	SPECIES	SLP
R5130SMB1MUF1	Maple	$542.99
R5130SMB1CUF1	Cherry	$610.99
R5130SMB17UF1	Rift White Oak	$604.99
R5130SMB1OUF1	Red Oak	$494.99
R5130SMB1QUF1	Alder	$605.99

Arched Accent Canopy Hood W36" x H24"

PRODUCT	SPECIES	SLP
R4136SMB1MUF1	Maple	$632.99
R4136SMB1CUF1	Cherry	$691.99
R4136SMB17UF1	Rift White Oak	$694.99
R4136SMB1OUF1	Red Oak	$598.99
R4136SMB1QUF1	Alder	$702.99

Arched Accent Canopy Hood W36" x H30"

PRODUCT	SPECIES	SLP
R5136SMB1MUF1	Maple	$653.99
R5136SMB1CUF1	Cherry	$712.99
R5136SMB17UF1	Rift White Oak	$704.99
R5136SMB1OUF1	Red Oak	$615.99
R5136SMB1QUF1	Alder	$718.99

Select Canopy Hood

Thoughtfully designed with clean lines and subtle details, the Select offers timeless appeal with broad versatility. It's an ideal option for anyone looking for timeless simplicity without sacrificing style.

- Available in 30" and 36" widths
- Available in maple, cherry, rift white oak, red oak, alder and paint-grade
- All surfaces sanded to 180 grit; ready to finish
- Features a 6" apron for flexibility of decoration and timeless style
- Mounts between wall cabinets
- Includes a silver metallic powder-coated liner that accommodates all BROAN® ventilation offered by Omega National Products by Rev-A-Shelf®



30" Select Canopy



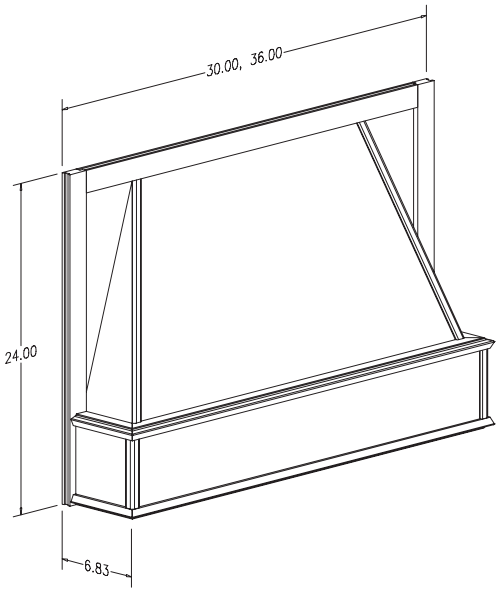

Select Canopy Hood W30"

PRODUCT	SPECIES	SLP
R1630MUF1	Maple	$583.99
R1630CUF1	Cherry	$634.99
R16307UF1	Rift White Oak	$634.99
R1630OUF1	Red Oak	$533.99
R1630QUF1	Alder	$603.99
R1630XUF1	Paint-Grade	$546.99

Select Canopy Hood W36"

PRODUCT	SPECIES	SLP
R1636MUF1	Maple	$679.99
R1636CUF1	Cherry	$728.99
R16367UF1	Rift White Oak	$728.99
R1636OUF	Red Oak	$627.99
R1636QUF1	Alder	$678.99
R1636XUF1	Paint-Grade	$636.99

Omega Canopy Hood

Bold and architectural, the Omega combines strong lines with balanced proportions. This design-forward option is perfect for kitchens that demand both presence and polish.

- Offers the timeless design your customers want
- Available in 30" and 36" widths
- Available in maple, cherry, rift white oak, red oak and alder
- All surfaces sanded to 180 grit; ready to finish
- Manufactured from solid wood and wood veneers
- Mounts between wall cabinets
- Includes a silver metallic powder-coated liner that accommodates all BROAN® ventilation offered by Omega National Products by Rev-A-Shelf®

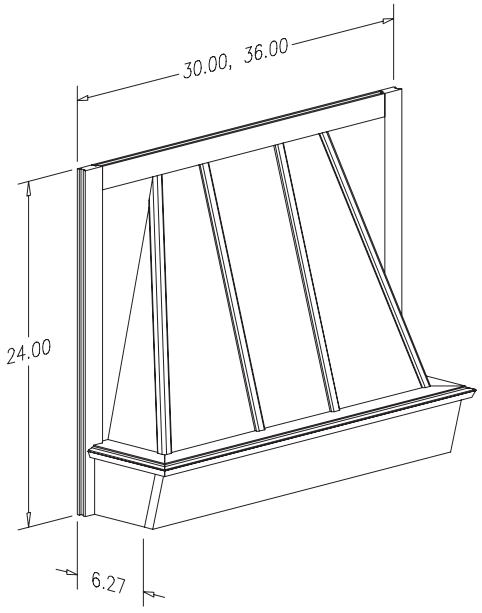



30" Omega Canopy

Omega Canopy Hood W30"

PRODUCT	SPECIES	SLP
R1130SMB1MUF1	Maple	$575.99
R1130SMB1CUF1	Cherry	$641.99
R1130SMB17UF1	Rift White Oak	$641.99
R1130SMB1OUF1	Red Oak	$543.99
R1130SMB1QUF1	Alder	$600.99

Omega Canopy Hood W36"

PRODUCT	SPECIES	SLP
R1136SMB1MUF1	Maple	$675.99
R1136SMB1CUF1	Cherry	$736.99
R1136SMB17UF1	Rift White Oak	$736.99
R1136SMB1OUF1	Red Oak	$631.99
R1136SMB1QUF1	Alder	$671.99



Hood Accessories

Broan Ventilation | Interior Ductwork Kit/Liners | Sirius Ventilation

BROAN® Ventilation

BROAN® 260 CFM

- HVI certified CFM: 260 on high (with 7" duct); 140 on low (with 7"duct)
- Stainless-steel finish
- Sones on high: 7; Sones on low: 3
- Bright LED Lights (2):
  -Wattage: 2.8 W -CCT (color temp.):
  -Lumens > 250
  -Rated Life: > 25,000 hrs. 2-speed rocker switch
- Max CFM: 300 (pre-installation)
- Quick-release aluminum mesh filter (dishwasher safe)
- Power requirements: 120 VAC, 60 Hz – 2.3 AMPS
- Ducting: vertical 7" round



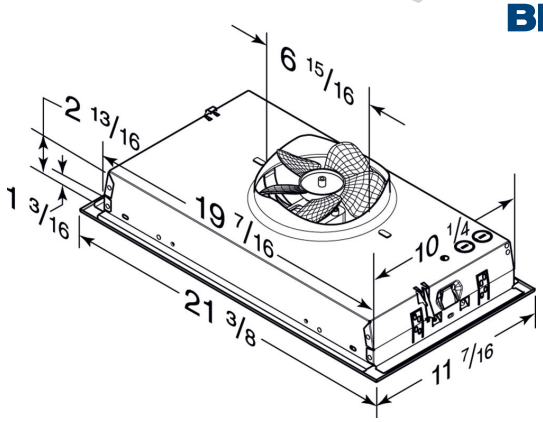

BROAN® 260 CFM Ventilation Power Module

PRODUCT	DESCRIPTION	FINISH	SLP
RHVBF300SS	BROAN 260 CFM	Stainless-Steel	$404.99

BROAN® 400 CFM

- HVI certified CFM: 400 on high (3-1/4 x 10 rectangular duct); 390 on high (6" round duct)
- Stainless-steel finish
- Sones on high: 6
- Bright LED lights (2):
  - Wattage: 2.8 W
  - CCT (color temp.): 3,000K
  - Lumens: > 250
  - Rated Life: > 25,000 hrs.
- Heat sentry automatically turns unit on when excessive heat is detected.
- Unit has master on-off switch (to meet future standards)
- Quick-release aluminum mesh filter (dishwasher safe)
- Power requirements: 120 VAC, 60 Hz – 2.3 AMPS
- Ducting: vertical 6" round or 3-1/4" x 10"

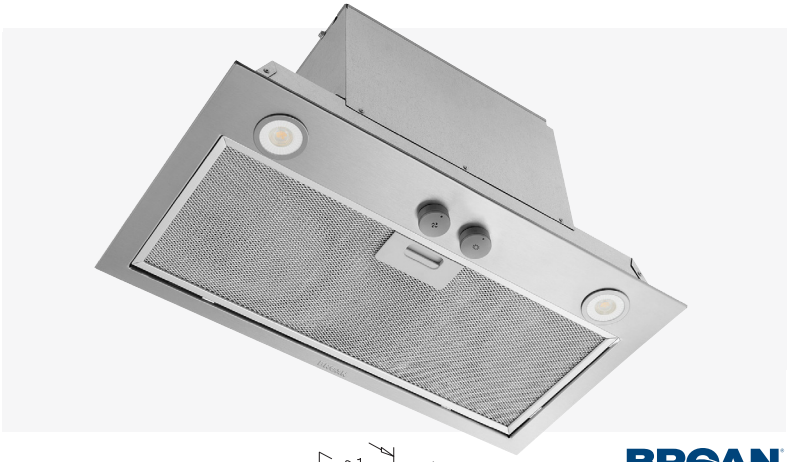

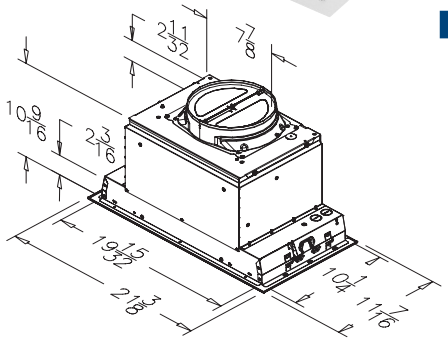

BROAN® 400 CFM Ventilation Power Module

PRODUCT	DESCRIPTION	FINISH	SLP
RHVB400SS	BROAN 400 CFM	Stainless-Steel	$739.99

BROAN® Ventilation

BROAN® 600 CFM



- HVI certified CFM: 600 on high (with 8"round duct); 580 on high (3-1/4 x 10" duct)
- CRT (Code-Ready Technology) allows you to change CFM to 400 or 300 CFM at installation, allowing the ventilator to conform to make-up air code requirements, where applicable.
- Stainless-steel finish
- Sones on high: 9.5; Sones on low: 3.3
- Bright LED lights, 3-level (2 modules):
  - Wattage: 3W
  - CCT (color temp.): 3,000K
  - Lumens: > 300
  - Rated Life: > 25,000 hrs.
- Max CFM: 650 (pre-installation)
- 4-speed electronic soft touch control buttons
- Baffle-style quick-release filter (dishwasher safe)
- Auto-sensing feature (when activated) sets CFM to correct level for what is being prepared on cooktop.
- Wi-Fi enabled feature allows for voice control using Alexa/Google, if desired.
- Heat sentry automatically turns unit on when excessive heat is detected.
- Unit has master on-off switch (to meet future standards)
- Ducting: 8" round, 6" round or 3-1/4" x 10"
- Power requirements: 120 VAC, 60 Hz - 4.0 AMPS

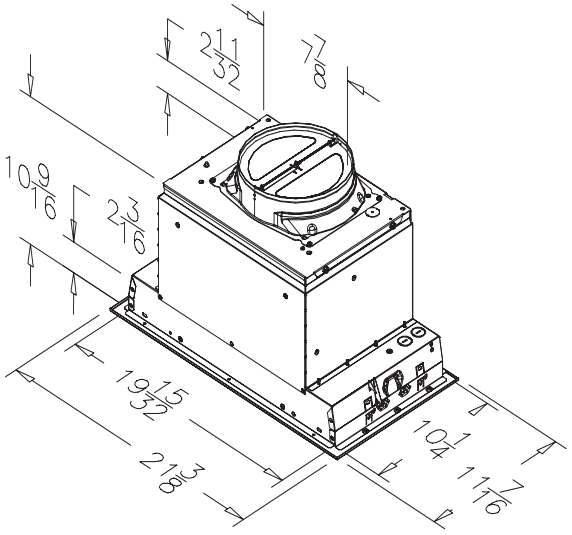

BROAN® 600 CFM Ventilation Power Module

PRODUCT	DESCRIPTION	FINISH	SLP
RHVB600SSV	BROAN 600 CFM	Stainless-Steel	$1377.99

BROAN® Liners

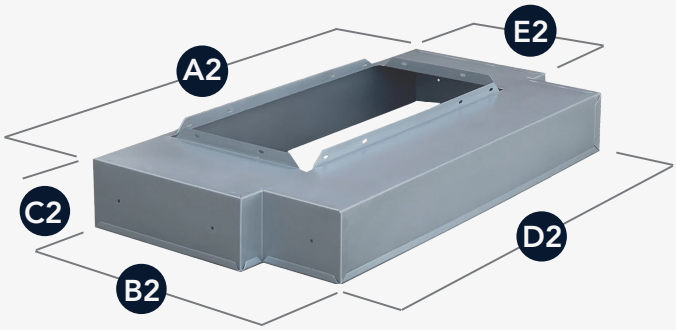

Opening is W19-1/2" x D10-1/4"

Liners Designed for BROAN® Ventilation

PRODUCT	MODEL	DESCRIPTION	FINISH	A2	B2	C2	D2	E2	SLP
090654SM2	RHVBF300SS/RHVB400SS/RHVB600SSV	Liner 30" Notched	SM	29-15/16"	16-1/2"	4"	26-3/16"	11-1/8"	$217.99
090655SM2	RHVBF300SS/RHVB400SS/RHVB600SSV	Liner 36" Notched	SM	35-15/16"	16-1/2"	4"	32-3/16"	11-1/8"	$250.99
090656SM2	RHVBF300SS/RHVB400SS/RHVB600SSV	Liner 30" Rectangular	SM	28-1/2"	18-1/4"	4"	-	-	$275.99
090657SM2	RHVBF300SS/RHVB400SS/RHVB600SSV	Liner 36" Rectangular	SM	34-1/2"	18-1/4"	4"	-	-	$294.99
090658SM2	RHVBF300SS/RHVB400SS/RHVB600SSV	Liner 30" x 24-1/2" Rectangular	SM	28-1/2"	24-1/2"	4"	-	-	$304.99
090659SM2	RHVBF300SS/RHVB400SS/RHVB600SSV	Liner 36" x 24-1/2" Rectangular	SM	34-1/2"	24-1/2"	4"	-	-	$362.99
099AB36SM1	RHVBF300SS/RHVB400SS/RHVB600SSV	Liner 36" Arched	SM	34-7/16"	18-1/4"	6"	-	-	$247.99
099AB42SM1	RHVBF300SS/RHVB400SS/RHVB600SSV	Liner 42" Arched	SM	40-7/16"	18-1/4"	6"	-	-	$215.90
099AB48SM1	RHVBF300SS/RHVB400SS/RHVB600SSV	Liner 48" Arched	SM	46-7/16"	18-1/4"	6"	-	-	$227.95
090SB36SM1	RHVBF300SS/RHVB400SS/RHVB600SSV	Liner 36" Straight	SM	34-7/16"	18-1/4"	4"	-	-	$235.99
090SB42SM1	RHVBF300SS/RHVB400SS/RHVB600SSV	Liner 42" Straight	SM	40-7/16"	18-1/4"	4"	-	-	$256.99
090SB48SM1	RHVBF300SS/RHVB400SS/RHVB600SSV	Liner 48" Straight	SM	46-7/16"	18-1/4"	4"	-	-	$269.99

Interior Ductwork Kit

- Kit for ducting range hood exhaust back into the kitchen
- Includes:
  - Charcoal filter 7-1/2" x 19" with clips
  - White steel grill 11-1/4" x 3-3/4"
    - Angle boot 7" x 4" x 10"
    - Angle boot collar 4" x 10"
    - Round pipe 7" x 22"
  - Reducer 7" x 6"



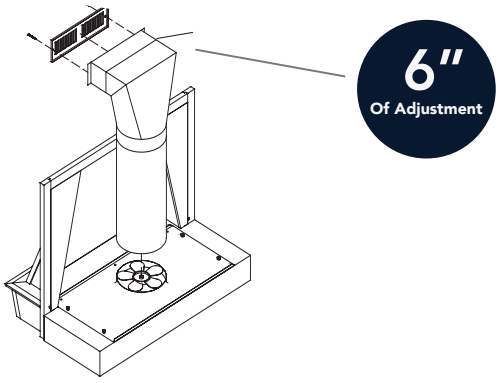

Interior Ductwork Kit

PRODUCT	DESCRIPTION	SLP
90360DUC1	Interior Ductwork Kit	$225.99

Note: Not for use in 30" Wall Hood Chimneys

Sirius Ventilation

Sirius 960 CFM Power Module

- Clean European design with professional-style appearance and performance (960 CFM)
- Produced using 430-grade stainless-steel
- Stainless baffle filters are easily removable for cleaning (dishwasher safe)
- Dual aluminum die cast motors
- Very quiet operation
  - 66 dBA / Sones on High: 5.1
- 4-speed push button control offers greater CFM flexibility: 9 60 CFM, 660 CFM, 480 CFM and 300 CFM
- 10 minute delay off timer
- Includes LED lighting
  Wattage: 2 x 4W LED spot for 34”
- As with all pro-style ventilation, exterior ducting is recommended
- Weight: 39 lbs
- 2-year limited warrantly

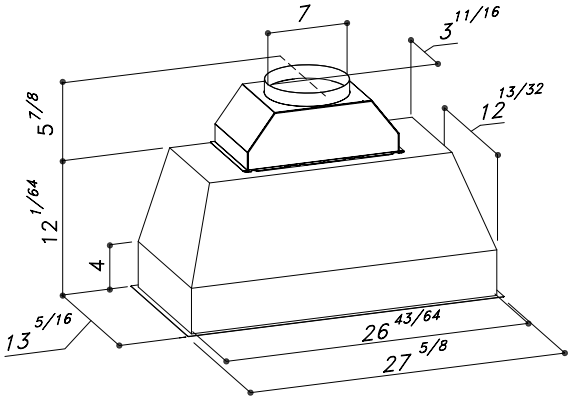



Enhance performance without sacrificing style with our Sirius Ventilation System. These high-performance ventilators offer exceptional ventilation with a powerful 960 CFM at the cooktop, complemented by durable stainless-steel baffle filters for maximum efficiency.

Some of our Wood Range Hood styles with 36” minimum widths come equipped with liners that are perfectly tailored for the Sirius system. Our Signature, Signature Craftsman, and Artisan style hoods now include liners compatible with this system as standard.

Visit omeganationalproducts.com to browse part numbers and explore our extensive range of wood accessories. The vast majority of our product line is proudly made by Omega National Products, right here in the US.



R2136SMS3MUF1 Straight Valance Signature Hood with SUT90870MLED

Sirius 960 CFM Power Module		
PRODUCT	SPECIES	SLP
SUT90870MLED	960 CFM Ventilator	$2608.99

Sirius Range Hoods

Omega National Products
REV-A-SHELF

Sirius Ventilation Liners

- Designed for custom applications
- 6" deep
- Crafted from 20-guage, silver metallic powder-coated steel
- Clear powder coat for easy cleaning
- Recommended for 48" and larger cooktops
- Mounting flanges included



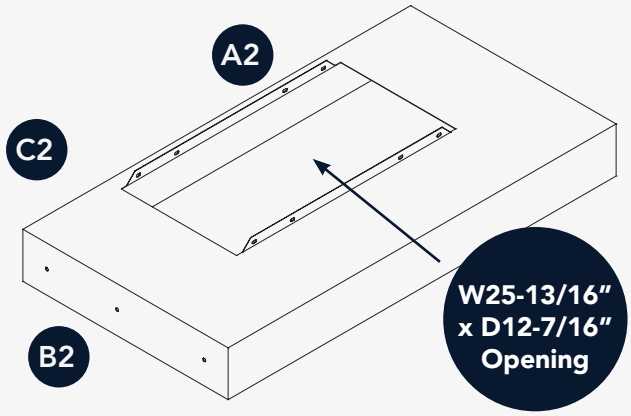

Liners Specifically Designed for Sirius 960CFM Ventilator

PRODUCT	DESCRIPTION	A2	B2	C2	SLP
09080AS336SM1	Liner 36" Arched	34-7/16"	18-3/16"	6"	$309.99
09080AS342SM1	Liner 42" Arched	40-7/16"	18-3/16"	6"	$333.99
09080AS348SM1	Liner 48" Arched	46-7/16"	18-3/16"	6"	$346.99
09081SS36SM1	Liner 36" Straight	34-7/16"	18-3/16"	4"	$299.99
09081SS42SM1	Liner 42" Straight	28-1/2"	18-3/16"	4"	$378.99
09081SS48SM1	Liner 48" Straight	46-7/16"	18-3/16"	4"	$399.99

Sirius Range Hoods



Floating Shelves

Decorative | Functional | Elegant

Elevate Your Space

Our Floating Shelves seamlessly blend in to any kitchen, bedroom, bathroom, laundry room, mudroom, pantry, office, closet.... you name it! With no visible hardware, these shelves install easily with our unique bracket hanging system and meets or exceeds BHMA standards, allowing you to safely add all of the functional or decorative items you wish.

Easy 2-Bracket Hanging System!









NEW

Curved Floating Shelves



A bold take on modern shelving, our Curved Floating Shelves feature a sleek, curved front and hidden hardware for a clean, seamless look. Made from solid wood and wood veneer, they're durable, stylish, and ready for your custom finish.

- Curved Floating Shelves offer a fresh, modern look with a subtly curved 8-1/2" radiused edge for added visual interest
- Expertly crafted from maple, cherry, rift white oak, red oak, alder, walnut, hickory, and paint-grade materials
- Solid wood and wood veneer construction (paint-grade shelves made from poplar and MDF)
- Complete turn-key system includes floating shelf, 100 lb. capacity hanging brackets, mounting hardware, and installation instructions
- Available in seven standard widths: 24", 30", 36", 42", 48" and 54"
- Standard depth is 10" (with a 12" deep option available by special order)
- Unique hanging system ensures quick installation and long-term durability
- No visible hardware for a seamless floating effect
- Meets or exceeds BHMA standards for safety and strength
- Sanded and ready to finish, allowing for complete customization

Curved Floating Shelves 2-1/2"H, 10"D, 24"W

PRODUCT	SPECIES	SLP
FSC8124MUF1	Maple	$239.99
FSC8124CUF1	Cherry	$245.99
FSC81247UF1	Rift White Oak	$344.99
FSC8124OUF1	Red Oak	$238.99
FSC8124QUF1	Alder	$275.99
FSC8124EUF1	Walnut	$319.99
FSC8124HUF1	Hickory	$253.99
FSC8124XUF1	Paint Grade	$208.99

Curved Floating Shelves 2-1/2"H, 10"D, 30"W

PRODUCT	SPECIES	SLP
FSC8130MUF1	Maple	$264.99
FSC8130CUF1	Cherry	$271.99
FSC81307UF1	Rift White Oak	$389.99
FSC8130OUF1	Red Oak	$262.99
FSC8130QUF1	Alder	$308.99
FSC8130EUF1	Walnut	$335.99
FSC8130HUF1	Hickory	$284.99
FSC8130XUF1	Paint Grade	$223.99

Curved Floating 2-1/2"H, 10"D, 36"W

PRODUCT	SPECIES	SLP
FSC8136MUF1	Maple	$327.99
FSC8136CUF1	Cherry	$340.99
FSC81367UF1	Rift White Oak	$484.99
FSC8136OUF1	Red Oak	$328.99
FSC8136QUF1	Alder	$388.99
FSC8136EUF1	Walnut	$446.99
FSC8136HUF1	Hickory	$361.99
FSC8136XUF1	Paint Grade	$269.99



Walnut Curved Floating Shelf

Curved Floating Shelves 2-1/2"H, 10"D, 42"W		
PRODUCT	SPECIES	SLP
FSC8142MUF1	Maple	$336.99
FSC8142CUF1	Cherry	$348.99
FSC81427UF1	Rift White Oak	$503.99
FSC8142OUF1	Red Oak	$336.99
FSC8142QUF1	Alder	$398.99
FSC8142EUF1	Walnut	$463.99
FSC8142HUF1	Hickory	$369.99
FSC8142XUF1	Paint Grade	$277.99

Curved Floating Shelves 2-1/2"H, 10"D, 48"W		
PRODUCT	SPECIES	SLP
FSC8148MUF1	Maple	$359.99
FSC8148CUF1	Cherry	$371.99
FSC81487UF1	Rift White Oak	$536.99
FSC8148OUF1	Red Oak	$358.99
FSC8148QUF1	Alder	$423.99
FSC8148EUF1	Walnut	$493.99
FSC8148HUF1	Hickory	$391.99
FSC8148XUF1	Paint Grade	$299.99

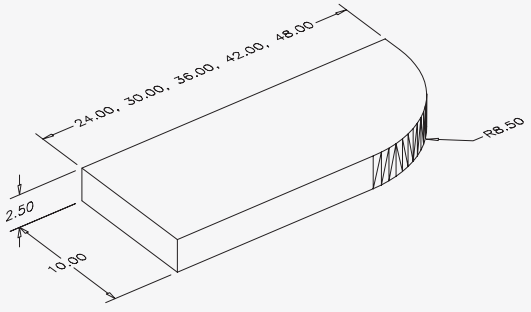

Classic Floating Shelves

Simple, stylish, and endlessly versatile... our Classic Floating Shelves offer clean lines and a streamlined look that works in any room. The concealed bracket system ensures easy installation with a true floating appearance.

- 7 widths offered: 24", 30", 36" 42", 48", 54" and 60"
- Shelves are 2-1/2" thick x 10" deep (12" deep available by special order)
- Solid wood and wood veneer construction (paint-grade is poplar and mdf)
- Sanded; ready to finish
- Floating Shelves are the perfect way to add stylish organization to your kitchen, bath, home office or laundry areas
- Expertly crafted in maple, cherry, rift white oak, red oak, alder and paint-grade
- Complete turn-key system includes floating shelf, hanging brackets, mounting hardware and installation instructions
- Available in multiple lengths from 24" to 60"
- Each shelf includes our unique hanging system for simple installation and long term durability
- Meets or exceeds BHMA standards
- Individually cartoned



24" Floating Shelves - 2-1/2" T x 10" D x 24" L

PRODUCT	SPECIES	SLP
FS0124MUF1	Maple	$159.99
FS0124CUF1	Cherry	$165.99
FS01247UF1	Rift White Oak	$173.99
FS0124OUF1	Red Oak	$153.99
FS0124QUF1	Alder	$165.99
FS0124XUF1	Paint-Grade	$120.99
FS0124HUF1	Hickory	$166.99

30" Floating Shelves - 2-1/2" T x 10" D x 30" L

PRODUCT	SPECIES	SLP
FS0130MUF1	Maple	$175.99
FS0130CUF1	Cherry	$184.99
FS01307UF1	Rift White Oak	$193.99
FS0130OUF1	Red Oak	$166.99
FS0130QUF1	Alder	$184.99
FS0130XUF1	Paint-Grade	$127.99
FS0130HUF1	Hickory	$182.99

36" Floating Shelves - 2-1/2" T x 10" D x 36" L

PRODUCT	SPECIES	SLP
FS0136MUF1	Maple	$205.99
FS0136CUF1	Cherry	$218.99
FS01367UF1	Rift White Oak	$229.99
FS0136OUF1	Red Oak	$192.99
FS0136QUF1	Alder	$219.99
FS0136XUF1	Paint-Grade	$140.99
FS0136HUF1	Hickory	$218.99

42" Floating Shelves - 2-1/2" T x 10" D x 42" L

PRODUCT	SPECIES	SLP
FS0142MUF1	Maple	$214.99
FS0142CUF1	Cherry	$226.99
FS01427UF1	Rift White Oak	$238.99
FS0142OUF1	Red Oak	$201.99
FS0142QUF1	Alder	$227.99
FS0142HUF1	Hickory	$224.99
FS0142XUF1	Paint-Grade	$147.99



54" Floating Shelves - 2-1/2" T x 10" D x 54" L

PRODUCT	SPECIES	SLP
FS0154MUF1	Maple	$275.99
FS0154CUF1	Cherry	$293.99
FS01547UF1	Rift White Oak	$304.99
FS0154OUF1	Red Oak	$253.99
FS0154QUF1	Alder	$296.99
FS0154XUF1	Paint-Grade	$179.99
FS0154HUF1	Hickory	$290.99

48" Floating Shelves - 2-1/2" T x 10" D x 48" L

PRODUCT	SPECIES	SLP
FS0148MUF1	Maple	$230.99
FS0148CUF1	Cherry	$231.99
FS01487UF1	Rift White Oak	$243.99
FS0148OUF1	Red Oak	$227.99
FS0148QUF1	Alder	$232.99
FS0148XUF1	Paint-Grade	$147.99
FS0148HUF1	Hickory	$231.99

60" Floating Shelves - 2-1/2" T x 10" D x 60" L

PRODUCT	SPECIES	SLP
FS0160MUF1	Maple	$311.99
FS0160CUF1	Cherry	$332.99
FS01607UF1	Rift White Oak	$345.99
FS0160OUF1	Red Oak	$283.99
FS0160QUF1	Alder	$380.99
FS0160XUF1	Paint-Grade	$217.99
FS0160HUF1	Hickory	$316.99

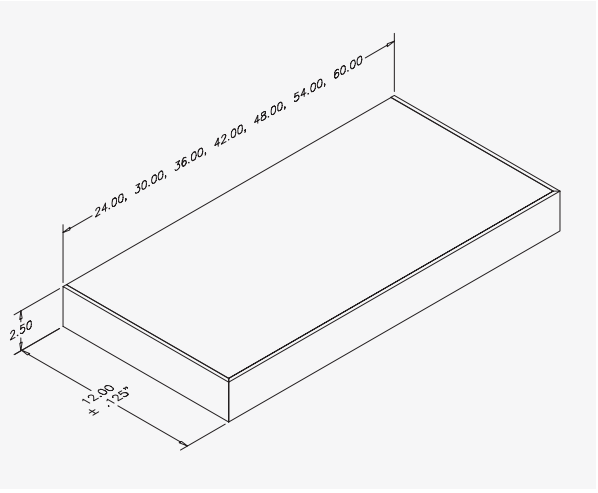

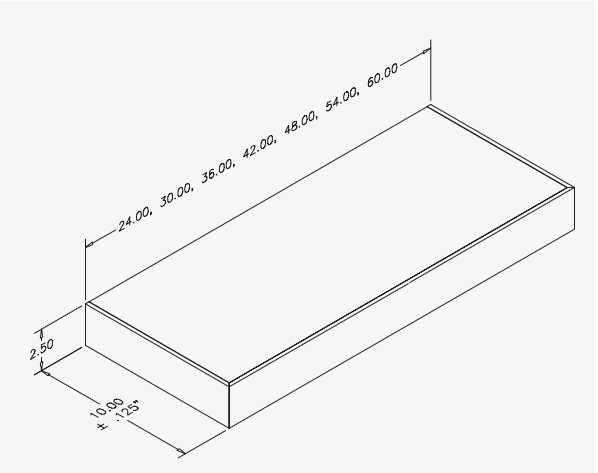



InnovaShelf

T-LOC | EZ-LOC | TIMBER-LOC
FLOATING CABINET BRACKET

NEW

InnovaShelf® T-LOC

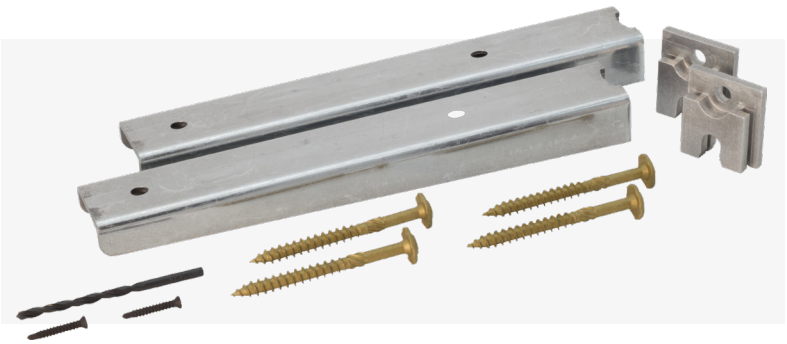

INNOVASHELF™

What Makes InnovaShelf Different?

The secret lies in our patented (U.S. Patent Nos. 10,588,412 B2 & 11,013,326 B2) T-LOC system.The T-Loc System is the core technology behind the versatility of InnovaShelf.

It uses a precision-engineered **T-shaped** bracket that locks directly into a routed channel within the shelf body, delivering superior stability and alignment.

T-Loc is designed for universal mounting applications and is available in multiple kit configurations to accommodate various wall types: wood stud, steel stud, drywall and concrete.This flexibility makes it the most comprehensive solution for installers seeking a single system adaptable to nearly any installation environment.

The bracket's concealed engagement also preserves a clean, floating appearance once installed.

- Patented 2-piece adjustable bracket system ideal for heavy-duty floating shelf installations
- Designed for shelves 2" or thicker
- Available in lengths up to 20"
- Supports up to 450 lbs. per pair
- The shelf is secured to bracket with self-tapping trim screws
- Compatible with wood stud, steel stud, drywall and concrete
- Includes all hardware necessary to mount and secure shelves

Note: Omega Classic Floating Shelves are compatible with T-LOC 1515 Bracket Sets ONLY

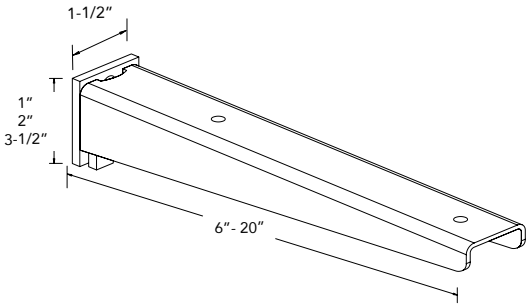

*Note: *=5 or †=10 (qty.)*

T-LOC-1510 Floating Shelf Bracket Set

	PRODUCT	WALL PLATE HEIGHT	ARM HEIGHT	WOOD STUD WEIGHT RATING	DRYWALL WEIGHT RATING	STEEL STUD WEIGHT RATING	SLP
†	T-LOC-1510-06	1-1/2"	1"	250 lbs.	80 lbs.	120 lbs.	$74.99
†	T-LOC-1510-08	1-1/2"	1"	250 lbs.	80 lbs.	120 lbs.	$80.99
†	T-LOC-1510-10	1-1/2"	1"	250 lbs.	80 lbs.	120 lbs.	$87.99
†	T-LOC-1510-12	1-1/2"	1"	250 lbs.	80 lbs.	120 lbs.	$93.99
*	T-LOC-1510-14	1-1/2"	1"	250 lbs.	80 lbs.	120 lbs.	$100.99
*	T-LOC-1510-16	1-1/2"	1"	250 lbs.	80 lbs.	120 lbs.	$106.99

T-LOC-1515 Floating Shelf Bracket Set

	PRODUCT	WALL PLATE HEIGHT	ARM HEIGHT	WOOD STUD WEIGHT RATING	DRYWALL WEIGHT RATING	STEEL STUD WEIGHT RATING	SLP
†	T-LOC-1515-06	1-1/2"	1-1/2"	300 lbs.	80 lbs.	120 lbs.	$78.99
†	T-LOC-1515-08	1-1/2"	1-1/2"	300 lbs.	80 lbs.	120 lbs.	$84.99
†	T-LOC-1515-10	1-1/2"	1-1/2"	300 lbs.	80 lbs.	120 lbs.	$91.99
†	T-LOC-1515-12	1-1/2"	1-1/2"	300 lbs.	80 lbs.	120 lbs.	$97.99
*	T-LOC-1515-14	1-1/2"	1-1/2"	300 lbs.	80 lbs.	120 lbs.	$104.99
*	T-LOC-1515-16	1-1/2"	1-1/2"	300 lbs.	80 lbs.	120 lbs.	$111.99
*	T-LOC-1515-18	1-1/2"	1-1/2"	300 lbs.	80 lbs.	120 lbs.	$117.99
*	T-LOC-1515-20	1-1/2"	1-1/2"	300 lbs.	80 lbs.	120 lbs.	$124.99

T-LOC-1575 Floating Shelf Bracket Set

	PRODUCT	WALL PLATE HEIGHT	ARM HEIGHT	WOOD STUD WEIGHT RATING	DRYWALL WEIGHT RATING	STEEL STUD WEIGHT RATING	SLP
†	T-LOC-1575-06	1-1/2"	3/4"	200 lbs.	80 lbs.	120 lbs.	$71.99
†	T-LOC-1575-08	1-1/2"	3/4"	200 lbs.	80 lbs.	120 lbs.	$77.99
†	T-LOC-1575-10	1-1/2"	3/4"	200 lbs.	80 lbs.	120 lbs.	$84.99
†	T-LOC-1575-12	1-1/2"	3/4"	200 lbs.	80 lbs.	120 lbs.	$90.99
*	T-LOC-1575-14	1-1/2"	3/4"	200 lbs.	80 lbs.	120 lbs.	$97.99

T-LOC-2015 Floating Shelf Bracket Set

	PRODUCT	WALL PLATE HEIGHT	ARM HEIGHT	WOOD STUD WEIGHT RATING	DRYWALL WEIGHT RATING	STEEL STUD WEIGHT RATING	SLP
†	T-LOC-2015-06	2"	1-1/2"	450 lbs.	100 lbs.	150 lbs.	$86.99
†	T-LOC-2015-08	2"	1-1/2"	450 lbs.	100 lbs.	150 lbs.	$93.99
†	T-LOC-2015-10	2"	1-1/2"	450 lbs.	100 lbs.	150 lbs.	$99.99
†	T-LOC-2015-12	2"	1-1/2"	450 lbs.	100 lbs.	150 lbs.	$106.99
*	T-LOC-2015-14	2"	1-1/2"	450 lbs.	100 lbs.	150 lbs.	$112.99
*	T-LOC-2015-16	2"	1-1/2"	450 lbs.	100 lbs.	150 lbs.	$119.99
*	T-LOC-2015-18	2"	1-1/2"	450 lbs.	100 lbs.	150 lbs.	$125.99
*	T-LOC-2015-20	2"	1-1/2"	450 lbs.	100 lbs.	150 lbs.	$132.99

T-LOC-3525 Floating Shelf Bracket Set

	PRODUCT	WALL PLATE HEIGHT	ARM HEIGHT	WOOD STUD WEIGHT RATING	DRYWALL WEIGHT RATING	STEEL STUD WEIGHT RATING	SLP
*	T-LOC-3525-14	3-1/2"	2-1/2"	1000 lbs.	n/a	n/a	$134.99
*	T-LOC-3525-16	3-1/2"	2-1/2"	1000 lbs.	n/a	n/a	$145.99
*	T-LOC-3525-18	3-1/2"	2-1/2"	1000 lbs.	n/a	n/a	$155.99

NEW

InnovaShelf® EZ-LOC



The EZ-Loc System combines the strength of the our patented (U.S. Patent Nos. 10,588,412 B2 & 11,013,326 B2) T-LOC system with simplified mounting for finished wall environments.

Designed specifically for wood stud applications after drywall is in place, EZ-Loc allows installers to easily locate studs, mount brackets directly through the finished surface, and slide shelves into place.

Its front-load locking design ensures quick engagement and secure alignment without extensive wall modification, making it ideal for remodels and post-construction projects where wall access is limited.

- Streamlined solution for installing floating shelves after drywall
- Designed for shelves 2" or thicker
- Two sizes available: 1" (EZ-LOC-1010) and 1-1/4" (EZ-LOC-1210)
- EZ-LOC-1010 is compatible with 2" thick shelves without dadoes
- Supports 100+ lbs. per pair
- Mounts to wood studs after drywall
- Adjustable 2-piece bracket design
- Includes all hardware necessary to mount and secure shelves

INNOVASHELF™

*Note: *=5 or †=10 (qty.)*

EZ-LOC-1010 Floating Shelf Bracket Set

	PRODUCT	WALL PLATE HEIGHT	ARM HEIGHT	LENGTH	WEIGHT RATING	SLP
†	EZ-LOC-1010-06	1"	1"	6"	100 lbs.	$32.99
†	EZ-LOC-1010-08	1"	1"	8"	100 lbs.	$34.99
†	EZ-LOC-1010-10	1"	1"	10"	100 lbs.	$35.99
†	EZ-LOC-1010-12	1"	1"	12"	100 lbs.	$36.99

EZ-LOC-1210 Floating Shelf Bracket Set

	PRODUCT	WALL PLATE HEIGHT	ARM HEIGHT	LENGTH	WEIGHT RATING	SLP
†	EZ-LOC-1210-06	1-1/4"	1"	6"	125 lb	$36.99
†	EZ-LOC-1210-08	1-1/4"	1"	8"	125 lb	$37.99
†	EZ-LOC-1210-10	1-1/4"	1"	10"	125 lb	$38.99
†	EZ-LOC-1210-12	1-1/4"	1"	12"	125 lb	$39.99



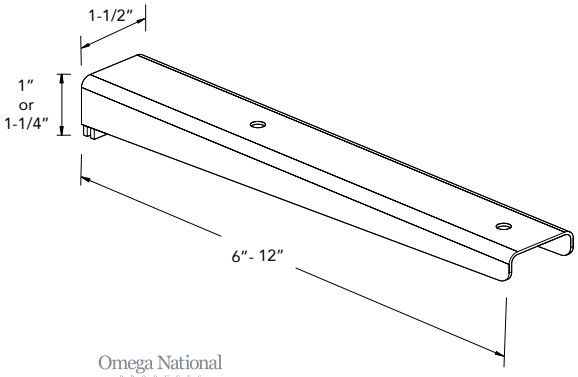

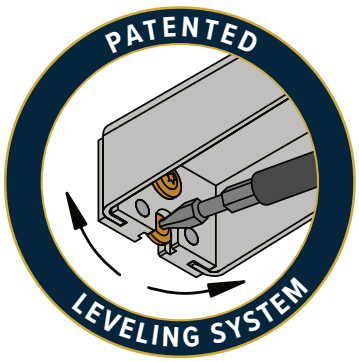

NEW

InnovaShelf® TIMBER-LOC

The TBR-Loc System is engineered for solid wood stud construction and optimized for heavy-duty installations requiring enhanced load capacity. It features reinforced arms and expanded anchor points to accommodate thicker, denser timber shelving.

For added precision, Timber-Loc offers a Self-Centering Drilling Jig (sold separately), which ensures perfectly aligned pilot holes and consistent bracket placement during installation.This system is best suited for high-weight applications or projects where structural integrity and repeatable accuracy are critical.

- Versatile bracket system for thick, heavy wood shelves
- Designed for shelves 1-1/2" to 8" thick
- Available in 4", 6" and 8" lengths
- Supports up to 200+ lbs per pair
- Bi-directional adjustment for perfect alignment
- Multi-step drilling operation creates a shelf-specific hole tailored to TIMBER-LOC brackets
- Automatically centers the hole to prevent blowout
- Adjusts to any size shelf up to 3-1/2" thick
- Cam-lock secures the jig to the shelf during drilling
- Wood stud application
- 2-piece design for easy installation
- Includes all hardware necessary to mount shelves

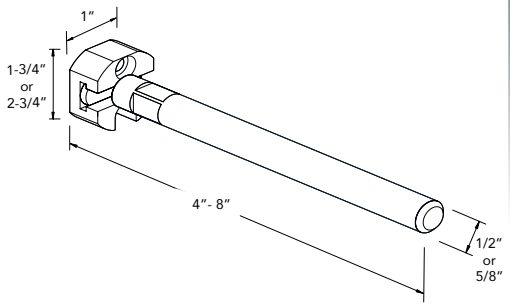

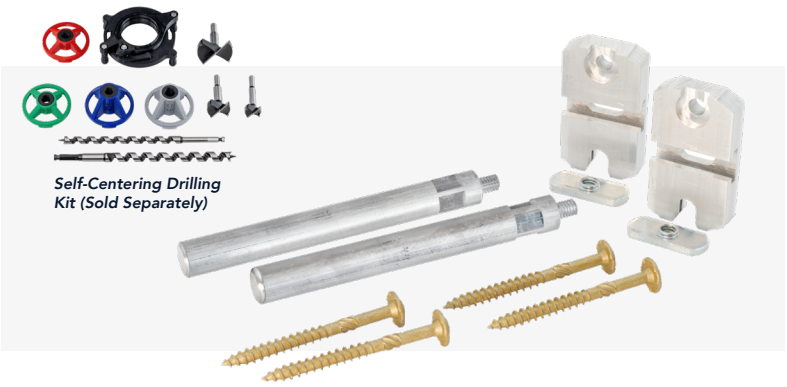

INNOVASHELF™

*Note: *=5 or †=10 (qty.)*

TIMBER-LOC-1250 Solid Wood Shelf Bracket Set

	PRODUCT	WALL PLATE HEIGHT	ARM DIAMETER	WEIGHT RATING	MIN SHELF THICKNESS	MAX SHELF THICKNESS	SLP
†	TBR-LOC-1250-04	1-1/4"	1/2"	100 lbs.	1-1/2"	3-1/2"	$67.99
†	TBR-LOC-1250-06	1-1/4"	1/2"	100 lbs.	1-1/2"	3-1/2"	$82.99
†	TBR-LOC-1250-08	1-1/4"	1/2"	100 lbs.	1-1/2"	3-1/2"	$98.99

TIMBER-LOC-1762 Solid Wood Shelf Bracket Set

	PRODUCT	WALL PLATE HEIGHT	ARM DIAMETER	WEIGHT RATING	MIN SHELF THICKNESS	MAX SHELF THICKNESS	SLP
†	TBR-LOC-1762-04	1-3/4"	5/8"	200 lbs.	2"	3-1/2"	$84.99
†	TBR-LOC-1762-06	1-3/4"	5/8"	200 lbs.	2"	3-1/2"	$103.99
†	TBR-LOC-1762-08	1-3/4"	5/8"	200 lbs.	2"	3-1/2"	$122.99

TIMBER-LOC-2762 Solid Wood Shelf Bracket Set

	PRODUCT	WALL PLATE HEIGHT	ARM DIAMETER	WEIGHT RATING	MIN SHELF THICKNESS	MAX SHELF THICKNESS	SLP
†	TBR-LOC-2762-04	2-3/4"	5/8"	300 lbs.	3"	8"	$106.99
†	TBR-LOC-2762-06	2-3/4"	5/8"	300 lbs.	3"	8"	$125.99
†	TBR-LOC-2762-08	2-3/4"	5/8"	300 lbs.	3"	8"	$144.99

TIMBER-LOC-1250 Single Solid Wood Shelf Bracket

	PRODUCT	WALL PLATE HEIGHT	ARM DIAMETER	WEIGHT RATING	MIN SHELF THICKNESS	MAX SHELF THICKNESS	SLP
†	TBR-LOC-1250-04-S	1-1/4"	1/2"	100 lbs.	1-1/2"	3-1/2"	$30.99
†	TBR-LOC-1250-06-S	1-1/4"	1/2"	100 lbs.	1-1/2"	3-1/2"	$37.99
†	TBR-LOC-1250-08-S	1-1/4"	1/2"	100 lbs.	1-1/2"	3-1/2"	$44.99

TIMBER-LOC-1762 Single Solid Wood Shelf Bracket

	PRODUCT	WALL PLATE HEIGHT	ARM DIAMETER	WEIGHT RATING	MIN SHELF THICKNESS	MAX SHELF THICKNESS	SLP
†	TBR-LOC-1762-04	1-3/4"	5/8"	200 lbs.	2"	3-1/2"	$84.99
†	TBR-LOC-1762-06	1-3/4"	5/8"	200 lbs.	2"	3-1/2"	$103.99
†	TBR-LOC-1762-08	1-3/4"	5/8"	200 lbs.	2"	3-1/2"	$122.99

TIMBER-LOC-2762 Single Solid Wood Shelf Bracket

	PRODUCT	WALL PLATE HEIGHT	ARM DIAMETER	WEIGHT RATING	MIN SHELF THICKNESS	MAX SHELF THICKNESS	SLP
†	TBR-LOC-2762-04	2-3/4"	5/8"	300 lbs.	3"	8"	$106.99
†	TBR-LOC-2762-06	2-3/4"	5/8"	300 lbs.	3"	8"	$125.99
†	TBR-LOC-2762-08	2-3/4"	5/8"	300 lbs.	3"	8"	$144.99



NEW

InnovaShelf® Floating Cabinet Bracket



INNOVASHELF™

Transform the way you install cabinets with our patented Floating Cabinet Mounting System (U.S. Patent No. 12,193,571 B2). Designed for effortless versatility and unmatched strength, this all-in-one kit makes creating a sleek, floating look - simple no matter the size or material. Adjustable to fit cabinets from 15 to 84 inches wide and supporting up to 1,000 lbs when secured to two or more studs, it delivers professional-grade performance you can trust. Compatible with hardwood, plywood, MDF and particle board, it's the smarter, faster way to elevate any space.

- Heavy-duty adjustable bracket system for floating base cabinets
- Available in kits for cabinets 15" to 84" wide
- Width adjusts to fit any cabinet size
- Supports up to 1000 lbs. when installed into two or more studs
- Compatible with hardwood, plywood, MDF and particle board
- Can be assembled in the shop or on the job site
- Kits include all components necessary to hang the cabinet

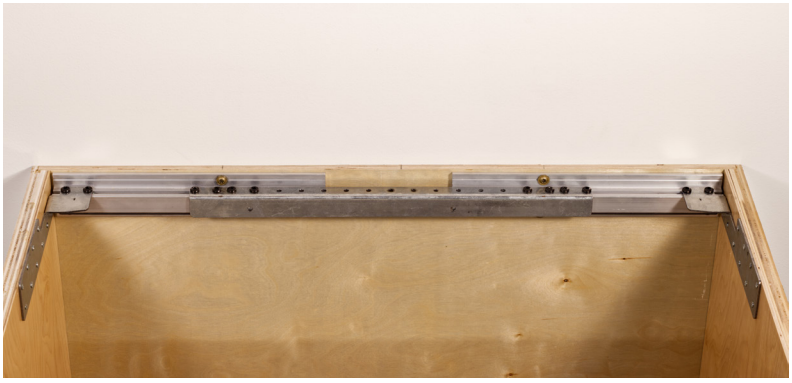

Floating Cabinet Bracket

PRODUCT	WEIGHT RATING	MIN CABINET OVERALL WIDTH	MAX CABINET OVERALL WIDTH	SLP
FCB-1521	500 lbs.	15"	21"	$128.99
FCB-2129	500 lbs.	21"	29"	$146.99
FCB-2942	1000 lbs.	29"	42"	$173.99
FCB-4256	1000 lbs.	42"	56"	$196.99
FCB-5684	1000 lbs.	56"	84"	$226.99



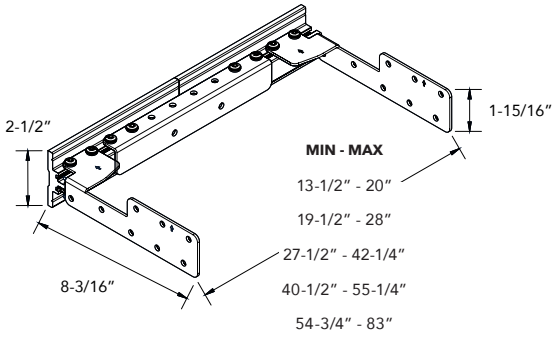

NEW

InnovaShelf® Accessories

InnovaShelf® offers a full range of accessories designed to simplify and standardize the installation of its floating shelf bracket systems, regardless of wall construction or installer experience. These include a Concrete Installation Kit for masonry walls, multiple Self-Centering Drill Bits and precision drilling jigs for perfect hole alignment, and specialized mounting kits for drywall and steel studs.

Self-Centering Drill Bits & Precision Jigs

- Automatically aligns bit to the center of the stud for perfect drilling
- Eliminates drift and reduces risk of misalignment or rework
- Speeds up installation and improves consistency across multiple installs
- Ensures bracket arms sit flush and level for clean, finished results
- Sold separately for installers who want repeatable, professional accuracy

Drywall & Steel Stud Kit

- Built for walls without accessible wood studs
- Rated hardware for both hollow drywall and thin-gauge steel studs
- Provides safe, load-bearing support without timber backing
- Versatile solution for multifamily, commercial or steel-frame projects
- Fully compatible with InnovaShelf floating shelf brackets

Concrete Installation Kit

- Engineered for masonry, poured concrete, and block walls
- Includes high-strength anchors and hardware for dense substrates
- Maintains load performance comparable to stud-based installs
- Ideal for basements, lofts, commercial and multi-family applications
- Designed to integrate with all compatible InnovaShelf brackets



Self-Centering Drilling Kit

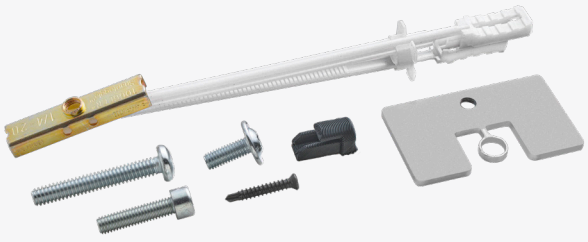

Drywall/Steel Kit

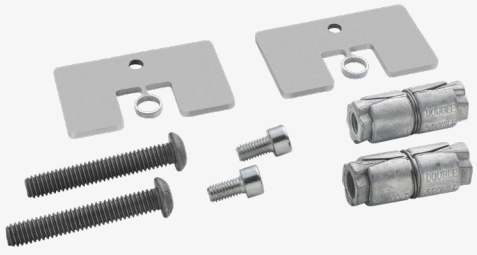

Concrete Kit

InnovaShelf® Accessories

PRODUCT	DESCRIPTION	SLP
CKIT	Concrete Kit	$34.99
DR-JIG	Drilling Kit for Solid Wood Shelves	$710.99
DSCK15	Drywall/Steel Mounting Kit	$16.99
DSCK20	Drywall/Steel Mounting Kit	$16.99

Product Index Guide

090654SM2 417
090655SM2 417
090656SM2 417
090657SM2 417
090658SM2 417
090659SM2 417
09080AS336SM1 419
09080AS342SM1 419
09080AS348SM1 419
09081SS36SM1 419
09081SS42SM1 419
09081SS48SM1 419
090SB36SM1 417
090SB42SM1 417
090SB48SM1 417
099AB36SM1 417
099AB42SM1 417
099AB48SM1 417
3071-18-**-52 313
3071-20-**-52 313
3071-24-**-52 313
3071-28-**-52 313
3072-18-**-52 313
3072-20-**-52 313
3072-24-**-52 313
3072-28-**-52 313
3073-18-**-531 313
3073-18-**-536 313
3073-20-**-531 313
3073-20-**-536 313
3150-11BR 245
3150-11CR 245
3150-11ORB 245
3150-11SN 245
3150-16BR 245
3150-16CR 245
3150-16ORB 245
3150-16SN 245
3150-18BR 245
3150-18CR 245
3150-18ORB 245
3150-18SN 245
3450-11BR 245
3450-11CR 245
3450-11ORB 245
3450-11SN 245
3471-24-**-52 313
3471-28-**-52 313
3471-32-**-52 313
3472-24-**-52 313
3472-28-**-52 313
3472-32-**-52 313
432-BFBBSC-3C 159
432-BFBBSC-6C 159
432-BFSC-3C 160
432-BFSC-6C 160
432-BFSC-9C 160
432-TF39-6C 186
432-TF45-6C 186
432-VF26SC-3 267
432-VF26SC-6 267
432-VF30SC-3 267
432-VF30SC-6 267
432-WFBBSC30-3C 243
432-WFBBSC30-6C 243
432-WFBBSC33-3C 243
432-WFBBSC33-6C 243
432-WFBBSC36-3C 243
432-WFBBSC36-6C 243
432-WFBBSC39-3C 243
432-WFBBSC39-6C 243
432-WFBBSC42-3C 243
432-WFBBSC42-6C 243
432TB-BFBBSC-3C 158
432TB-BFBBSC-6C 158
438-BC-3C 161
438-BC-6C 161
438-BCSC-3C 161
438-BCSC-6C 161
441-12VSBSC-1 ..... 132, 256
441-15VSBSC-1 ..... 132, 256
444-BCSC-8C 150
445-VBOSC-8C 250
445-VCG20SC-8 268
445-VCG25SC-8 268
447-BCSC-5C 169
447-BCSC-6C 169
447-BCSC-8C 169
447-BCSC-9C 169
448-08SC-SRI-1 ..... 163, 168
448-11SC-SRI-1 168
448-BBSCWC-5C 235
448-BBSCWC-6C 235
448-BBSCWC-8C 235
448-BBSCWC-9C 235
448-BBSCWC36-5C 235
448-BBSCWC36-8C 235
448-BC-11C 162, 163
448-BC-14C 162, 163
448-BC-5C 162, 163
448-BC-6C 162, 163
448-BC-8C 162, 163
448-BC19SC-5C 167, 168
448-BC19SC-8C 167, 168
448-BCBBSC-5C 162, 163
448-BCBBSC-8C 162, 163
448-BCSC-11C 167, 168
448-BCSC-14C 167, 168
448-BCSC-5C 167, 168
448-BCSC-6C 167, 168
448-BCSC-8C 167, 168
448-BCSC-9C 167, 168
448-BCSCSD-5C 167, 168
448-BCSCSD-8C 167, 168
448-BDDSC-11C 167, 168
448-BDDSC-5C 167, 168
448-BDDSC-8C 167, 168
448-BSKS-3C 165
448-BSKT-3C 165
448-HP-523C 235
448-SR11-1 163
448-SR8-1 163
448-TPF43-11-1 185
448-TPF43-14-1 185
448-TPF43-5-1 185
448-TPF43-8-1 185
448-TPF51-11-1 185
448-TPF51-14-1 185
448-TPF51-5-1 185
448-TPF51-8-1 185
448-TPF58-11-1 185
448-TPF58-14-1 185
448-TPF58-5-1 185
448-TPF58-8-1 185
448-VC20SC-8 269
448-VC25SC-8 269
448KB-BCSC-11C 167, 168
448KB-BCSC-5C 167, 168
448KB-BCSC-6C 167, 168
448KB-BCSC-8C 167, 168
448KB-BCSC-9C 167, 168
448OXO-BCSC-8C 167, 168
448PTH-BCSC-6C 168
448PTH-BCSC-8C 168
448SW-BCSC-5C 164
448SW-BCSC-8C 164
448UT-BCSC-11C 168
448UT-BCSC-5C 168
448UT-BCSC-6C 168
448UT-BCSC-8C 168
448UT-BCSC-9C 168
449-BCSC-10C 171
449-BCSC-5C 171
449-BCSC-7C 171
449-BCSC-8C 171
449KB-BCSC-8C 171
449UT-BCSC-10C 171
449UT-BCSC-5C 171
449UT-BCSC-7C 171
449UT-BCSC-8C 171
486-30VSBSC-BM-1 ..... 133, 249
486-30VSBSC-SM-1 ..... 133, 249
4ADI-36-1 199
4ASR-15 239
4ASR-15BIN-10 239
4ASR-18 239
4ASR-18BIN-10 239
4ASR-21 239
4ASR-21BIN-10 239
4ASR-25STD-20 239
4ASR-31STD-20 239

4ASR-37STD-20 239
4B-10-8 338
4B-7-8 338
4BM1-04-52 338
4BM1-18-52 338
4BS-10-8 338
4BS-7-8 338
4CDI-18-KCUP-1 221
4CDI-24-KCUP-1 221
4CDS-18SC-1 144
4CDS-24SC-1 144
4CW2-18SC-1 143
4CW2-24SC-1 143
4DMCB-15 145
4DMCB-18 145
4DMKB-18-1 148
4DPB-2421 219
4DPB-3021 219
4DPB-3921 219
4DPBG-2421-1 219
4DPBG-3021-1 219
4DPBG-3921-1 219
4DPS-2421 219
4DPS-3021 219
4DPS-3921 219
4DPS-PEG-1 219
4DPS-PEG-WN-1 219
4DPS-WN-2421 219
4DPS-WN-3021 219
4DPS-WN-3921 219
4FSCO-18SC-1 151
4FSCO-24SC-1 151
4FWI-16-14-1 198
4FWI-16-18-1 198
4HD-15-1 254
4HDBM2-04-52 338
4KCB-18HSC-1 211
4KCB-21HSC-1 211
4KCB-24HSC-1 211
4KCB-419HFLSC-1 211
4OXO-18-1 200
4OXO-24-1 200
4PIL-20-088-1 155
4PIL-20-088-10 155
4PIL-20-113-1 155
4PIL-20-113-10 155
4PIL-20-238-1 155
4PIL-20-238-10 155
4PIL-27-088-1 155
4PIL-27-088-10 155
4PIL-27-113-1 155
4PIL-27-113-10 155
4PIL-27-238-1 155
4PIL-27-238-10 155
4PIL-54-088-1 183
4PIL-54-088-10 183
4PIL-54-113-1 183
4PIL-54-113-10 183
4PIL-54-238-1 183
4PIL-54-238-10 183
4PIL-HDW-1 ..... 155, 183
4PIL-HDW-10 ..... 155, 183
4PIL-HDW-160 ..... 155, 183
4PIL-HDW-L-200 ..... 155, 183
4PIL-HDW-R-200 ..... 155, 183
4PIL-T-1 ..... 155, 183
4PIL-T-40 ..... 155, 183
4PIL20-18SC-2 ..... 155, 183
4PIL20-24SC-2 ..... 155, 183
4PIL27-18SC-3 ..... 155, 183
4PIL27-24SC-3 ..... 155, 183
4PILU-20-088-40 155
4PILU-20-113-40 155
4PILU-20-238-40 155
4PILU-27-088-40 155
4PILU-27-113-40 155
4PILU-27-238-40 155
4PILU-43-088-20 183
4PILU-43-113-20 183
4PILU-43-238-20 183
4PILU-50-088-20 183
4PILU-50-113-20 183
4PILU-50-238-20 183
4PILU-58-088-20 183
4PILU-58-113-20 183
4PILU-58-238-20 183
4PTD-18HSC-1 196
4PTD-WN18HSC-1 196
4PTTD-18HSC-1 197
4PTTD-WN18HSC-1 197
4SB-10-1 340
4SB-10-10 340
4SB-7-1 340
4SB-7-10 340
4SBPT-18-1 113
4SBS-10-1 340
4SBS-7-1 340
4SBS-7-10 340
4SBSU-15 ..... 117, 147
4SBSU-18 ..... 117, 147
4SBSU-21 ..... 117, 147
4SDI-18 220
4SDI-18T-1 220
4SDI-24 220
4SDI-24T-1 220
4SDI-36-1 220
4SDI-WN-18-1 220
4SDI-WN-24-1 220
4SOWC-8-1 ..... 94, 126, 258
4SR-15 238
4SR-18 238
4SR-21 238
4SSB-15-MP 136
4SSB-15-MPMB 136
4SSB-15-WN 136
4SSB-15-WNMB 136
4SSB-18-MP 136
4SSB-18-MPMB 136
4SSB-18-WN 136
4SSB-18-WNMB 136
4TMBIN-15-6 69
4TMBIN-17-6 69
4TMBIN-6 69
4TT-2133-1 212
4UH-BC-9C 149
4VCOS-22-1 252
4VDI-18-1 253
4VHTM-1520DM-1 260
4VLWCSC-1527DM-2 89
4VLWCSC-1535DM-1 89
4VLWCSC-1550DM-1 89
4VLWCSC-1835DM-2 89
4VLWCSC-1850DM-2 89
4VLWCSC-2135DM-2 89
4VLWCSC-2150DM-2 89
4VLWCSC-2432DM-2 89
4VOD-18FLSC-1 251
4VOD-18SC-1 251
4VR-12-1 257
4VR-15-1 257
4VR-18-1 257
4WBDP18-25 146
4WBP18-25-KIT 146
4WBSP18-25 146
4WC-15DM1 82
4WC-18DM2 82
4WC-2432DM2-SC 82
4WC-TOKIT-12 ..... 71, 83, 87
4WC-TOKIT-15 ..... 71, 83, 87
4WC-TOKIT-18 ..... 71, 83, 87
4WC-WN-1550DM1-SC 83
4WC-WN-15DM1-SC 83
4WC-WN-18DM2-SC 83
4WC-WN-2150DM2-SC 83
4WCBM-1550DM-1 85
4WCBM-15DM-1 85
4WCBM-1850DM-2 85
4WCBM-18DM-2 85
4WCBM-2150DM-2 85
4WCBM-2432DM-2 85
4WCCB-18HSC-1 210
4WCCB-419HFLSC-1 210
4WCDB-18HFLSC-1 205
4WCDB-18HFLSC-1-USB 205
4WCDB-18HSC-1 205
4WCSC-1220-19-1 258
4WCSC-1527DM-2 87
4WCSC-1532DM16-1 ..... 87, 258
4WCSC-1535DM-1 87
4WCSC-1535DM19-1 ..... 87, 258
4WCSC-1550DM-1 87
4WCSC-1835DM-2 87
4WCSC-1835DMND-2 87
4WCSC-1850DM-2 87
4WCSC-2135DM-2 87
4WCSC-2150DM-2 87
4WCSD-1535DM-1 87
4WCSD-1550DM-1 87
4WCSD-1835DM-2 87
4WCSD-2150DM-2 87
4WCT-1 213
4WCT-15SH-1 216
4WCT-18SH-1 216
4WCT-1SH 213

4WCT-21SH-1 216
4WCT-24SH-1 216
4WCT-3 213
4WCT-3SH 213
4WCT-WN-1SH 213
4WCT-WN-3SH 213
4WCTM-12BBSCDM1 92
4WCTM-12DM1 92
4WCTM-12DM1-162 92
4WCTM-12DM1-175 92
4WCTM-12DM1-343-FL ... 92
4WCTM-1516DM-1 92
4WCTM-1550BBSCDM-1 .....
..... 92
4WCTM-1550DM-1 92
4WCTM-1550DM1-343-FL ...
..... 92
4WCTM-15BBSCDM2 92
4WCTM-15DM2 92
4WCTM-15DM2-162 92
4WCTM-15DM2-343-FL .....
..... 92
4WCTM-1816DM-1 92
4WCTM-1850DM2-419-FL ...
..... 92
4WCTM-18BBSCDM2 92
4WCTM-18DM2 92
4WCTM-18DM2-162 92
4WCTM-18DM2-175 92
4WCTM-18DM2-419-FL ... 92
4WCTM-2150BBSCDM-2 . 92
4WCTM-2150DM-2 92
4WCTM-21DM2 92
4WCTM-21DM2-162 92
4WCTM-21DM2-495-FL ... 92
4WCTM-2450BBSCDM-2 . 92
4WCTM-24DM2 92
4WCTM-24DM2-162 92
4WCTM-27-4 92
4WCTM-SP-KIT 92
4WCWM-2435DMSC-2 66
4WCWM-2435DMSC-4 66
4WCWM-2450DMSC-2 66
4WCWM-2450DMSC-4 66
4WD-22-1 223
4WD-22SH-1 223
4WD-22SH-WN-1 223
4WDB-1219SC-1 152
4WDB-12SC-1 152
4WDB-15SC-1 152
4WDB-18SC-1 152
4WDB-21SC-1 152
4WDB4-18SC-1 153
4WDB4-24SC-1 153
4WDB4-PIL-18SC-1 .....
..... 155, 183
4WDB4-PIL-24SC-1 .....
..... 155, 183
4WDB7-18SC-1 153
4WDB7-24SC-1 153
4WDB7-PIL-18SC-1 .....
..... 155, 183
4WDB7-PIL-24SC-1 .....
..... 155, 183
4WDIV-24-1 202
4WDIV-24SH-1 202
4WDIV-30-1 202
4WDIV-30SH-1 202
4WDIV-36-1 202
4WDIV-36SH-1 202
4WDKB-1 222
4WDKB-WN-1 222
4WDP18-45 187
4WDP18-51 187
4WDP18-57* 187
4WDR-24HSC-1 203
4WDR-30HSC-1 203
4WFR-15-1 241
4WFR-18-1 241
4WFR-21-1 241
4WH-RM-15DM-1 266
4WH-VCSC-21DM-1 .....
..... 259, 298
4WHOX-24DMSC-1 248
4WHOX-24FHDMSC-1 248
4WKB-1 223
4WLS001-10-B52 324
4WLS001-18-52 324
4WLS001-18-B52 324
4WLS001-20-52 324
4WLS001-20-B52 324
4WLS001-28-52 324
4WLS001-28-B52 324
4WLS001-32-52 324
4WLS001-32-B52 324
4WLS072-18-52 324
4WLS072-20-52 324
4WLS072-22-52 324
4WLS072-28-52 324
4WLS072-32-52 324
4WLS073-18-536 324
4WLS073-20-536 324
4WLS201-20-52 324
4WLS201-20-BS52 324
4WLS201-22-BS52 324
4WLS201-31-52 324
4WLS201-31-BS52 324
4WLS272-20-52 324
4WLS272-22-52 324
4WLS272-31-52 324
4WLS273-20-536 324
4WLS401-24-52 325
4WLS401-28-52 325
4WLS401-28-BS52 325
4WLS401-32-52 325
4WLS401-32-BS52 325
4WLS472-24-52 325
4WLS472-28-52 325
4WLS472-32-52 325
4WLS87-12-* 101
4WLS87-15-* 101
4WLS87-18-* 101
4WLS871-12-* 101
4WLS871-15-* 101
4WLS871-18-* 101
4WLS882-32-570 .....
..... 108, 325
4WLS882-35-570 .....
..... 108, 325
4WLS882-38-570 .....
..... 108, 325
4WLS901-24-52 325
4WLS901-28-52 325
4WLS901-31-52 325
4WLS942-2433-52 325
4WLS942-24P-52 325
4WLS942-28P-52 325
4WLS942-31P-52 325
4WP18-45-KIT 187
4WP18-51-KIT 187
4WP18-57-KIT 187
4WSP18-45 187
4WSP18-51 187
4WSP18-57* 187
4WTCD-15HSC-1 207
4WTCD-18HSC-1 207
4WTCD-18HSC-KCUP-1 .....
..... 209
4WTCD-21HSC-1 207
4WTCD-24HSC-1 207
4WTCD-30HSC-1 208
4WTCD-343HFLSC-1 207
4WTCD-36HSC-1 208
4WTCD-419HFLSC-1 207
4WTCD-495HFLSC-1 207
4WTCD-572HFLSC-1 207
4WTCD-724HFLSC-1 208
4WTCD-876HFLSC-1 208
4WTCDD-30HSC-1 204
4WTCDD-36HSC-1 204
4WTCDD-724HFLSC-1 204
4WTCDD-876HFLSC-1 204
4WTMD-24HSC-1 201
4WUT-1 215
4WUT-15SH-1 217
4WUT-18SH-1 217
4WUT-1SH 215
4WUT-21SH-1 217
4WUT-24SH-1 217
4WUT-3 215
4WUT-3SH 215
4WUT-WN-1SH 215
4WUT-WN-3SH 215
5149-1527DM-217 75
5149-1550DM-111 75
5149-1550DM-117 75
5149-15DM-111 75
5149-15DM-117 75
5149-15DM18-111 .....
..... 75, 259
5149-15DM18-117 .....
..... 75, 259
5149-18DM-211 75
5149-18DM-217 75
5149-2150DM-211 75
5149-2150DM-217 75
5190-15RM-117 264
5190-LINER 264

53-401-28BSFOG-1 333
53-401-28BSGR-1 333
53-401-28BSMP-1 333
53-401-32BSFOG-1 333
53-401-32BSGR-1 333
53-401-32BSMP-1 333
5322-BCSC-11-** 172
5322-BCSC-11-GR 173
5322-BCSC-11-MP 173
5322-BCSC-5-** 172
5322-BCSC-5-GR 173
5322-BCSC-5-MP 173
5322-BCSC-6-** 172
5322-BCSC-6-FOG .....
..... 172, 173
5322-BCSC-6-GR 173
5322-BCSC-6-MP 173
5322-BCSC-8-** 172
5322-BCSC-8-GR 173
5322-BCSC-8-MP 173
5322-BCSC-9-** 172
5322-BCSC-9-FOG .....
..... 172, 173
5322-BCSC-9-GR 173
5322-BCSC-9-MP 173
5322KB-BCSC-11-** 172
5322KB-BCSC-11-GR 173
5322KB-BCSC-11-MP 173
5322KB-BCSC-6-** 172
5322KB-BCSC-6-FOG .....
..... 172, 173
5322KB-BCSC-6-GR 173
5322KB-BCSC-6-MP 173
5322KB-BCSC-8-** 172
5322KB-BCSC-8-GR 173
5322KB-BCSC-8-MP 173
5322KB-BCSC-9-** 172
5322KB-BCSC-9-GR 173
5322KB-BCSC-9-MP 173
5322UT-BCSC-6-** 172
5322UT-BCSC-6-FOG .....
..... 172, 173
5322UT-BCSC-6-GR 173
5322UT-BCSC-6-MP 173
5322UT-BCSC-8-** 172
5322UT-BCSC-8-GR 173
5322UT-BCSC-8-MP 173
5330-12BCSC-** ... 176, 177
5330-15BCSC-** ... 176, 177
5330-21BCSC-** ... 176, 177
5330-33BCSC-** ... 176, 177
5330-33BCSCFL-FOG 176, 177
5343-08-** 191
5343-10-** 191
5343-13-** 191
5343-16-** 191
5343-19-** 191
5345-DM-KIT-1 77
53472-28FOG-1 333
53472-28GR-1 333
53472-28MP-1 333
53472-32FOG-1 333
53472-32GR-1 333
53472-32MP-1 333
5349-1527DM-2 77
5349-1527DM-217 77
5349-1527DM-218 77
5349-1550DM-1 77
5349-1550DM-117 77
5349-1550DM-118 77
5349-15DM-1 77
5349-15DM-117 77
5349-15DM-118 77
5349-15DM18-1 77
5349-15DM18-117 77
5349-15DM18-118 77
5349-18DM-2 77
5349-18DM-217 77
5349-18DM-218 77
5349-2150DM-2 77
5349-2150DM-217 77
5349-2150DM-218 77
5350-08-** 191
5350-10-** 191
5350-13-** 191
5350-16-** 191
5350-19-** 191
5358-08-** 191
5358-10-** 191
5358-13-** 191
5358-16-** 191
5358-19-** 191
5365-08-FOG 240
5365-10-FOG 240
5365-14-FOG 240
5371-15-**-L 99
5371-15-**-R 99
5371-15-FOG-L 97
5371-15-FOG-R 97
5371-18-**-L 99
5371-18-**-R 99
5371-18-FOG-L 97
5371-18-FOG-R 97
5371-21-**-L 99
5371-21-**-R 99
5371-21-FOG-L 97
5371-21-FOG-R 97
5371-SC-KIT-1 ..... 97, 99
5372-15-**-L 99
5372-15-**-R 99
5372-15-FOG-L 97
5372-15-FOG-R 97
5372-18-**-L 99
5372-18-**-R 99
5372-18-FOG-L 97
5372-18-FOG-R 97
5372-21-**-L 99
5372-21-**-R 99
5372-21-FOG-L 97
5372-21-FOG-R 97
5372-SC-KIT-2 ..... 97, 99
5373-08-** 191
5373-10-** 191
5373-13-** 191
5373-16-** 191
5373-19-** 191
5374-18FL-FOG 188
5374-24FL-FOG 188
5375-40WR-1CR 156
5386-30BCSC-** 129
5386-30BCSCFL-FOG 129
5386-33BCSC-** 129
5386-33BCSCFL-FOG 129
53PSPE-15SC-** 103
53PSPE-18SC-** 103
53PSPE-18SC-FOG 103
53PSPE3-15SC-** 103
53PSPE3-18SC-** 103
53TM-1835GSCDM2-FL .....
..... 80
53TM-1850GSCDM2-FL .....
..... 80
53TM-18GSCDM3-FL 80
53TM-24GSCDM4-FL 80
53TMVH-24SCDM-2-FL .. 261
53WC-1527SCDM-213 79
53WC-1527SCDM-217 79
53WC-1527SCDM-218 79
53WC-1535SCDM-113 79
53WC-1535SCDM-117 79
53WC-1535SCDM-118 79
53WC-1550SCDM-113 79
53WC-1550SCDM-117 79
53WC-1550SCDM-118 79
53WC-1835SCDM-213 79
53WC-1835SCDM-217 79
53WC-1835SCDM-218 79
53WC-2150SCDM-213 79
53WC-2150SCDM-217 79
53WC-2150SCDM-218 79
544-12KD-1 134
548WB-0919CR-1 126
563-32 112
563-32 C 112
563-47 112
563-47 C 112
563-51-C 112
5707-15CR 107
5707-18CR 107
5708-15CR 236
5730-12CR 174, 175
5730-15CR 174, 175
5730-21CR 174, 175
5730-33CR 174, 175
5743-04-CR-1 193
5743-08-CR-1 193
5743-10-CR-1 193
5743-14-CR-1 193
5743-16-CR-1 193
5743-20-CR-1 193
5750-04-CR-1 193
5750-08-CR-1 193
5750-10-CR-1 193
5750-14-CR-1 193
5750-16-CR-1 193
5750-20-CR-1 193
5758-04-CR-1 193
5758-08-CR-1 193

5758-10-CR-1 193
5758-14-CR-1 193
5758-16-CR-1 193
5758-20-CR-1 193
5773-04-CR-1 193
5773-08-CR-1 193
5773-10-CR-1 193
5773-14-CR-1 193
5773-16-CR-1 193
5773-20-CR-1 193
5786-30CR 131
5786-33CR 131
5789CR 175
582-18-LMP 106
582-18-RMP 106
587-12-*** 100
587-12-*MP 100
587-15-*** 100
587-15-*MP 100
587-18-*** 100
587-18-*MP 100
5871-12-*MP 100
5871-15-*MP 100
5871-18-*MP 100
596-10CR-52 ..... 138, 237
597-12-10 ..... 138, 237
597-12-52 ..... 138, 237
597-12CR-10 ..... 138, 237
597-12CR-52 ..... 138, 237
599-18-LMP 109
599-18-RMP 109
5BBSC-WMDM24-C 81
5BBSC-WMDM24-W 81
5CHB-LINER 265, 300
5CW2-1222-CR 142
5CW2-1222SC-CR 142
5CW2-2122-CR 142
5CW2-2122SC-CR 142
5DCD-1-CR 219
5DCH-2-1-CR 219
5DLD-1-CR 219
5LB-1230SSBL-118 73
5LB-1232OGMP-113 73
5LB-1232OGWN-113 73
5LB-1232SSBL-118 73
5LB-1535OGMP-113 73
5LB-1535OGWN-113 73
5LB-1535SSBL-118 73
5LB-1550OGMP-113 73
5LB-1550OGWN-113 73
5LB-1550SSBL-118 73
5LB-1835OGMP-213 73
5LB-1835OGWN-213 73
5LB-1835SSBL-218 73
5LB-1850OGMP-213 73
5LB-1850OGWN-213 73
5LB-1850SSBL-218 73
5LB-2435OGWN-413 73
5LB-TOKIT-12 ..... 71, 73
5LB-TOKIT-15 ..... 71, 73
5LB-TOKIT-18 ..... 71, 73
5LBSD-KIT-1 73
5LSF018-8CR 334
5LSF018-CR 334
5LSF020-8CR 334
5LSF020-CR 334
5LSF028-CR 334
5LSF032-8CR 334
5LSF032-CR 334
5LSF424-CR 334
5LSF428-8CR 334
5LSF428-CR 334
5LSF432-8CR 334
5LSF432-CR 334
5PD-24CRN 246
5PD-24FOG 246
5PD-36CRN 246
5PD-36FOG 246
5PDYO-36MB 231
5PDYO-MB 231
5PSP-15-CR 105
5PSP-15SC-CR 105
5PSP-18-CR 105
5PSP-18SC-CR 105
5PSP3-15SC-CR 105
5PSP3-18SC-CR 105
5SBWC-815S-1 ..... 93, 127, 272
5SBWCC-8S-1 ..... 127, 272
5WB-DMKIT 93, 127, 141, 142, 272
5WB1-1220CR-1 141
5WB1-1222CR-1 141
5WB1-1520CR-1 141
5WB1-1522CR-1 141
5WB1-1820CR-1 141
5WB1-1822CR-1 141
5WB1-2120CR-1 141
5WB1-2122CR-1 141
5WB1-2422CR-1 141
5WB2-0922CR-1 141
5WB2-1222CR-1 141
5WB2-1522CR-1 141
5WB2-1822CR-1 141
5WB2-2122CR-1 141
5WB2-2422CR-1 141
5WU1-5W1-1 233
5WU2-3N1-1 233
5WU2-5W1-1 233
5WU2-9N3-1 233
5WU2-9W2-1 233
6000-05-7200-2-52 337
6000-07P-52 337
6000-37-52 337
6012-18-**-52 316
6012-20-**-52 316
6012-24-**-52 316
6012-28-**-52 316
6013-18-**-526 316
6013-20-**-526 316
6020-04P-4 337
6020-04P-426 337
6020-04P-52 337
6020-96-3100-2 337
6020-96-3600-2 337
6022-04-426 337
6022-04-52 337
6022-04-52-526 337
6071-16-**-52 316
6071-18-**-52 316
6071-20-**-52 316
6071-24-**-52 316
6071-28-**-52 316
6071-32-**-52 316
6072-04-52 337
6072-16-**-52 316
6072-18-**-52 316
6072-20-**-52 316
6072-24-**-52 316
6072-28-**-52 316
6072-32-**-52 316
6073-04-536 337
6073-18-**-536 316
6073-20-**-536 316
6221-20-**-52 315
6221-22-**-52 315
6265-04-52 339
6271-20-**-52 315
6271-22-**-52 315
6272-04-52 339
6272-20-**-52 315
6272-22-**-52 315
6273-20-**-536 315
6273-22-**-536 315
6360-05-7008-26-52 339
6370-96-7008-26-52 339
6421-18-**-52 315
6421-24-**-52 315
6421-28-**-52 315
6421-32-**-52 315
6470-96-4008-26-52 339
6471-18-**-52 315
6471-24-**-52 315
6471-28-**-52 315
6471-32-**-52 315
6472-18-**-52 315
6472-24-**-52 315
6472-28-**-52 315
6472-32-**-52 315
65*1-10-4 123
65*1-10-5 123
65*1-11-4 123
65*1-11-5 123
65*1-13-4 123
65*1-13-5 123
65*1-14-4 123
65*1-14-5 123
65*1-16-4 123
65*1-16-5 123
65*1-19-4 123
65*1-19-5 123
65*1-22-4 123
65*1-22-5 123
65*1-25-4 123
65*1-25-5 123
65*1-28-4 123
65*1-28-5 123

65*1-31-4 123
65*1-31-5 123
6541-36-**-4 121
6541-36-**-50 121
6541-36-**-52 121
6541-36-**-ETH 121
6541-36SC-11-50 122
6542-11-**-4 121
6542-11-**-52 121
6542-14-**-4 121
6542-14-**-52 121
6542-97-**-4 121
6542-ETH-**-10 121
6551-36-**-50 119
6551-36-**-52 119
6551-36-**-ETH 119
6551-36SC-11-50 122
6551-36SC-15-50 122
6552-97-**-4 119
6552-ETH-**-10 119
6552-ETH-10 125
6571-36-**-4 119
6571-60-52 119
6571-61-52 119
6571-72-**-4 119
6572-11-**-4 120
6572-11-**-52 120
6572-14-**-4 120
6572-14-**-52 120
6581-11-**-4 120
6581-14-**-4 120
6581-25SC-52 122
6581-28SC-52 122
6581-31SC-52 122
6591-11-**-4 120
6591-14-**-4 120
6621-16-**-52 316
6621-18-**-52 316
6621-20-**-52 316
6621-24-**-52 316
6621-28-**-52 316
6621-32-**-52 316
6841-04-52 341
6842-04-570 341
6842-31-**-570 317
6842-33-**-570 317
6842-39-**-570 317
6881-31-**-52 317
6881-33-**-52 317
6881-39-**-52 317
6882-04-52 341
6882-1008-04-52 ..... 108, 317, 341
6882-31-**-570 317
6882-33-**-570 317
6882-39-**-570 317
6940-04-28P-4 339
6940-04-28P-52 339
6942-04-28-52 339
6942-24-**-52 316
6942-28-**-52 316
6950-07P-52 339
7012-20-**-52 315
7013-20-**-526 315
90360DUC1 417
903720007 417
BDC-200-** 227
BDC-200-20 227
BDC24-** 227
BDC24-20 227
BM1-04-52 ..... 315, 316, 338
BM1-18-52 ..... 315, 338
BM1-VL-04-52 ..... 313, 338
BM1-VL-4-LHUB-12 338
BM1-VL-4-SHUB-12 338
BRC-12CR 281
BRC-12MB 281
BRC-12NS-CR 282
BRC-14CR 281
BRC-14MB 281
CA-LGORG-1 305
CA-NECKLACE-1 305
CA-SMORG-1 305
CB-181207CR-3 278
CB-181211CR-3 278
CB-181218CR-3 278
CB-181407CR-3 278
CB-181411CR-3 278
CB-181418CR-3 278
CB-181607CR-3 278
CB-181611CR-3 278
CB-181618CR-3 278
CB-182007CR-3 278
CB-182011CR-3 278
CB-182018CR-3 278
CB-241207CR-3 278
CB-241211CR-3 278
CB-241407CR-3 278
CB-241411CR-3 278
CB-241418CR-3 278
CB-241607CR-3 278
CB-241611CR-3 278
CB-241618CR-3 278
CB-242007CR-3 278
CB-242011CR-3 278
CB-242018CR-3 278
CB-301218CR-3 278
CB-301407CR-3 278
CB-301411CR-3 278
CB-301418CR-3 278
CB-301607CR-3 278
CB-301611CR-3 278
CB-301618CR-3 278
CH-241419-RM-217 ..... 265, 300
CHBI-241618-* 279
CHBI-242018-* 279
CHBI-301618-* 279
CIB-16CR 297
CJD-2414 304
CJD-24IN 304
CJD-24IS 304
CJD-DMB-KIT 304, 305
CLVSL-CR-1 285
CLVSL-MB-1 285
CLVSL-SN-1 285
CMSL-1424-SM-1 289
CMSL-1448-SM-1 289
CMTWSL-1448-SM-1 289
CPDR-1826 302
CPDR-2635 302
CPDR-3548 302
CPDRSL-48MB 303
CPDRSL-48SC 303
CPUIBSL-14-SM-1 291
CPUIBSL-COVER-52 291
CRCSL-CR-1 280
CRCSL-MB-1 280
CRCSL-SN-1 280
CROIBSL-14-MB-1 293
CROIBSL-14-SM-1 293
CROIBSL-COVER-52 293
CRSL-96-CR-1 280
CRSL-96-MB-1 280
CRSL-96-SN-1 280
CSOHSL-18-1 274
CSOHSL-24-1 274
CSOHSL-30-1 274
CSPD-14 301
CSPD-6 301
CSR-17CR-10 288
CSR-23CR-10 288
CSR-29CR-10 288
CSR-35CR-10 288
CSRSL-18MB-10 288
CSRSL-18SN-10 288
CSRSL-24MB-10 288
CSRSL-24SN-10 288
CSRSL-30MB-10 288
CSRSL-30SN-10 288
CSRSL-36MB-10 288
CSRSL-36SN-10 288
CSWIBSL-14-SM-1 295
CSWIBSL-COVER-52 295
CT-1*-10 224
CT-1*-52 224
CT-2*-20 224
CT-2*-52 224
CT-3*-20 224
CT-3*-52 224
CT-4*-10 224
CT-4*-52 224
CTOHBSL-FS-1 275
CTOHSL-18-1 275
CTOHSL-24-1 275
CTOHSL-30-1 275
CV-RING-1 305
CVJD-1814UM-1 305
CVJD-2414UM-1 305
CVJD-3014UM-1 305
CVL-12-CR 284
CVL-12-MB 284
CVR-12-CR 285
CVR-12-MB 285
CVR-14-CR 285
CVR-14-MB 285
CVRI-7-CR 284
CVRI-DG 284

DPS-PEG-1SS 219
FS01247UF1 424
FS0124CUF1 424
FS0124HUF1 424
FS0124MUF1 424
FS0124OUF1 424
FS0124QUF1 424
FS0124XUF1 424
FS01307UF1 424
FS0130CUF1 424
FS0130HUF1 424
FS0130MUF1 424
FS0130OUF1 424
FS0130QUF1 424
FS0130XUF1 424
FS01367UF1 424
FS0136CUF1 424
FS0136HUF1 424
FS0136MUF1 424
FS0136OUF1 424
FS0136QUF1 424
FS0136XUF1 424
FS01427UF1 424
FS0142CUF1 424
FS0142HUF1 424
FS0142MUF1 424
FS0142OUF1 424
FS0142QUF1 424
FS0142XUF1 424
FS01487UF1 425
FS0148CUF1 425
FS0148HUF1 425
FS0148MUF1 425
FS0148OUF1 425
FS0148QUF1 425
FS0148XUF1 425
FS01547UF1 425
FS0154CUF1 425
FS0154HUF1 425
FS0154MUF1 425
FS0154OUF1 425
FS0154QUF1 425
FS0154XUF1 425
FS01607UF1 425
FS0160CUF1 425
FS0160HUF1 425
FS0160MUF1 425
FS0160OUF1 425
FS0160QUF1 425
FS0160XUF1 425
FSC81247UF1 422
FSC8124CUF1 422
FSC8124EUF1 422
FSC8124HUF1 422
FSC8124MUF1 422
FSC8124OUF1 422
FSC8124QUF1 422
FSC8124XUF1 422
FSC81307UF1 422
FSC8130CUF1 422
FSC8130EUF1 422
FSC8130HUF1 422
FSC8130MUF1 422
FSC8130OUF1 422
FSC8130QUF1 422
FSC8130XUF1 422
FSC81367UF1 422
FSC8136CUF1 422
FSC8136EUF1 422
FSC8136HUF1 422
FSC8136MUF1 422
FSC8136OUF1 422
FSC8136QUF1 422
FSC8136XUF1 422
FSC81427UF1 423
FSC8142CUF1 423
FSC8142EUF1 423
FSC8142HUF1 423
FSC8142MUF1 423
FSC8142OUF1 423
FSC8142QUF1 423
FSC8142XUF1 423
FSC81487UF1 423
FSC8148CUF1 423
FSC8148EUF1 423
FSC8148HUF1 423
FSC8148MUF1 423
FSC8148OUF1 423
FSC8148QUF1 423
FSC8148XUF1 423
FSC81547UF1 423
FSC8154CUF1 423
FSC8154EUF1 423
FSC8154HUF1 423
FSC8154MUF1 423
FSC8154OUF1 423
FSC8154QUF1 423
FSC8154XUF1 423
GCT-1*-10 224
GCT-1*-52 224
GCT-2*-20 224
GCT-2*-52 224
GCT-3*-20 224
GCT-3*-52 224
GCT-4*-10 224
GCT-4*-52 224
GLD-W16-BC-5 ..... 137, 189
GLD-W22-BC-7 ..... 137, 189
GLD-W22-SC-7 ..... 137, 189
HPB-03323-52 ..... 259, 260, 262, 266, 298
HPB-1223-1 248
HPRV-1520 S 262
HPRV-1925 S 299
HPRV-1925DM S 299
HRV-1215 S 263
HRV-1220 S 263
HRV-1515 S 263
HRV-1520 S 263
HRV-1520 S CR 263
HRV-1520-LINER 263
IDRB-1 ..... 163, 185
JPE 301-12-020-1 341
JPE 301-34-0**-1 341
JPE 301-58-0**-1 341
L-16CL2-WH50-1 377
L-24B2SPKT-2M-1 365
L-24DCH96X3-1 375
L-DCE96D-CON-1 375
L-EXTMP-VHB-1 363
L-FLSMD-24HI27K-13S-1 355
L-FLSMD-24HI30K-13S-1 355
L-FLSMD-24HI35K-13S-1 355
L-FLSMD-24HI50K-13S-1 355
L-FLSMD-24HI65K-13S-1 355
L-FLSMD-24LO27K-20S-1 355
L-FLSMD-24LO30K-20S-1 355
L-FLSMD-24LO35K-20S-1 355
L-FLSMD-24LO50K-20S-1 355
L-FLSMD-24LO65K-20S-1 355
L-FLSMD-24MD27K-16S-1 355
L-FLSMD-24MD30K-16S-1 355
L-FLSMD-24MD35K-16S-1 355
L-FLSMD-24MD50K-16S-1 355
L-FLSMD-24MD65K-16S-1 355
L-FLTPE-24SLD-79-DFE-1 355, 357
L-FLTPE-BTB-DFE-1 ..... 355, 357
L-FLTPE-CLRTEE-DFE-1 ..... 355, 357
L-FLTPE-CON90-DFE-1 ..... 355, 357
L-FLTPE-LNK-2-DFE-1 ..... 355, 357, 363, 365
L-FLTPE-LNK-24-DFE-1 ..... 355, 357, 363, 365
L-FLTPE-LNK-6-DFE-1 ..... 355, 357, 363, 365
L-FLTPE-LNK-96-DFE-1 ..... 355, 357, 363, 365
L-FLTPE-LNKCON-DFE-1 ..... 355, 357
L-FLTPE-TEE-DFE-1 355
L-FNL-24VCCT-12-1 353
L-FNL-24VCCT-22-1 353
L-FNL-24VCCT-34-1 353
L-FNL-24VCCT-8-1 353
L-FNL-24VCCT-90CON-1 353
L-FNL-LNK-24-1 353
L-FNL-LNK-6-1 353
L-FNL-MAGCLP-1 353

L-LED-WCON-BL-1 377
L-N4-24V3WM-30K-192-1 359
L-N4-24V3WM-30K-60-1 359
L-N4-24V3WM-30K-96-1..... 359
L-N4-24V3WM-35K-192-1 359
L-N4-24V3WM-35K-60-1..... 359
L-N4-24V3WM-35K-96-1..... 359
L-N4-24V3WM-50K-192-1 359
L-N4-24V3WM-50K-60-1 359
L-N4-24V3WM-50K-96-1..... 359
L-OPAC-SAR-BL-1 351
L-OPAC-SAR-NI-1 351
L-OPAC-SAR-WH-1..... 351
L-OPAC-TKS-BL-1 351
L-OPAC-TKS-NI-1 351
L-OPAC-TKS-WH-1 351
L-OPDM-24R27K-NBW-1..... 351
L-OPDM-24R30K-NBW-1..... 351
L-OPDM-24R35K-NBW-1..... 351
L-OPDM-24R50K-NBW-1..... 351
L-PSCTL-CVT-1 373
L-PSCTL-DS1-NI-1 373
L-PSCTL-DS2-NI-1 373
L-PSCTL-MOT-NI 373
L-PSCTL-TCS-WH-1 373
L-PSCTL-TCU-WH-1 373
L-PSCTL-TDR-**-1 373
L-PSCTL-TDS-NI-1 373
L-PSLNK-79-1 373
L-PSPLG-24V36W-1..... 367
L-PSPLG-24V60W-1..... 367
L-PSPLG-24V96W-1351, 353, 359, 363, 365, 367
L-PSWLS-CDS-1..... 371
L-PSWLS-CMS-**-1 371
L-PSWLS-CRD-**-1..... 371
L-PSWLS-CTD-**-1 371
L-PSWLS-RCW-1 371
L-PWCON-24MLT6-DFE-1..... 359, 367
L-PWCON-24SXT-96-DFE-1 ... 359, 367
L-SPFL15WA-30K-1 365
L-SPFL15WA-40K-1.....365
L-SPFL15WA-50K-1 365
L-SPFL15WA-65K-1 365
L-SPFL8WA-30K-1 365
L-SPFL8WA-40K-1 365
L-SPFL8WA-50K-1 365
L-SPFL8WA-65K-1 365
L-VHBTPE-1134-1 377
L-WLD-1REC-1 369
L-WLD-1RND-NI-1.....369
L-WLD-1WAL-BL-1 369
L-WLD-1WAL-WH-1.....369
L-WLD-2WAL-WH-1 369
L-WLD-3RMT-BL-1 369
L-WLDS-NI-1 369
L-WLDSREC-1 369
L-WM5-BL-1 377
L-WM5-BR-1 377
L-X72-DIFF-MLK-1 362
L-X94-DIFF-MLK-1 362
L-XANG72-SC-1 362
L-XANGECP-GY-1 362
L-XFL72-SC-1 362
L-XFL94-SC-1 362
L-XPKT-2IN-WH-1 363
L-XREC72-BL-1.....362
L-XREC72-SC-1 362
L-XREC94-SC-1 362
L-XRECECP-GY-1 362
L-XRM42-155-1 363
L-XSBTB-1 365
L-XSQR-UCLP-1 363
L-XSQR72-SC-1.....362
L-XSQR94-SC-1.....362
L-XSQRECP-GY-1 362
L-XSQRSWCLP-1.....363
LD-0220-50-40 124
LD-0220-50SC-40 124
LD-0220-50SCFO-40..... 124
LD-20-0431-5.....340
LD-2061-18BM-**-1 309
LD-2061-24BM-**-1 309
LD-2061-28BM-**-1 309
LD-2061-32BM-**-1 309
LD-2062-18-**-1 309
LD-2062-18BM-**-1 309
LD-2062-24-**-1 309
LD-2062-24BM-**-1 309
LD-2062-28-**-1 309
LD-2062-28BM-**-1 309
LD-2062-32-**-1 309
LD-2062-32BM-**-1 309
LD-2063-1836-**-1 309
LD-2261-32BM-**-1 309
LD-2262-32-**-1 309
LD-2262-32BM-**-1 309
LD-24-04-5.....340
LD-24-0436-5.....340
LD-2472-18-**-1 309
LD-2472-18BM-**-1 309
LD-2472-24-**-1 309
LD-2472-24BM-**-1 309
LD-2472-28-**-1 309
LD-2472-28BM-**-1 309
LD-2472-32-**-1 309
LD-2472-32BM-**-1 309
LD-2473-1836-**-1 309
LD-24BM1-04-10 340
LD-24BM2-04-5.....340
LD-2942-18-**-1 309
LD-2942-24-**-1 309
LD-2942-28-**-1 309
LD-4BW-001-18SB-1 321
LD-4BW-001-20SB-1 321
LD-4BW-001-24SB-1 321
LD-4BW-001-28SB-1 321
LD-4BW-001-32SB-1 321
LD-4BW-004-4 340
LD-4BW-00436-4.....340
LD-4BW-062-18-1 321
LD-4BW-062-20-1.....321
LD-4BW-062-24-1.....321
LD-4BW-062-28-1.....321
LD-4BW-062-32-1.....321
LD-4BW-063-1836-1 321
LD-4BW-063-2036-1 321
LD-4BW-201-20SBS-1 321
LD-4BW-201-28SBS-1 321
LD-4BW-201-32SBS-1 321
LD-4BW-204-4 340
LD-4BW-20436-4 340
LD-4BW-262-20-1 321
LD-4BW-262-28-1 321
LD-4BW-262-32-1 321
LD-4BW-263-2036-1 321
LD-4BW-401-28SBS-1 321
LD-4BW-401-32SBS-1 321
LD-4BW-404-4 340
LD-4BW-472-24-1 321
LD-4BW-472-28-1 321
LD-4BW-472-32-1 321
LD-4BW-942-28-1 321
LD-4NW-001-18B-1 329
LD-4NW-001-24B-1 329
LD-4NW-001-28B-1 329
LD-4NW-001-32B-1 329
LD-4NW-072-18-1.....329
LD-4NW-072-24-1.....329
LD-4NW-072-28-1 329
LD-4NW-072-32-1 329
LD-4NW-073-1836-1 329
LD-4NW-201-20BS-1 329
LD-4NW-201-20TBS-1 329
LD-4NW-201-28BS-1..... 329
LD-4NW-201-32BS-1 329
LD-4NW-201-32TBS-1 329
LD-4NW-272-20-1.....329
LD-4NW-272-28-1.....329
LD-4NW-272-32-1.....329
LD-4NW-401-28BS-1 330
LD-4NW-401-28TBS-1.... 330
LD-4NW-401-32BS-1 330
LD-4NW-401-32TBS-1 ... 330
LD-4NW-472-18-1.....330
LD-4NW-472-28-1 330
LD-4NW-472-32-1.....330
LD-4NW-882-32-1 ..... 108, 329
LD-4NW-882-35-1 ..... 108, 329
LD-4NW-882-38-1 ..... 108, 329

LD-4NW-942-28-1 329
LD-597-12CR-1 139
LD-597-12CR-10 139
LD-597-18CR-1 139
LD-597-18CR-10 139
LD-6591-22-**-1 118
LD-6591-22-**-10 118
LD-6591-24-**-1 118
LD-6591-24-**-10 118
LD-6591-30-**-1 118
LD-6591-30-**-10 118
ML-MPHDSCCR-18 179
ML-WNHDSCOG-18FL 179
NSLS-KM-28S-7 335
NSLS-KM-32S-7 335
PSC-1814CR 287
PSC-2414CR 287
PSC-3014CR 287
PSCSL-1814SC-MB-1 286
PSCSL-1814SC-SN-1 286
PSCSL-2414SC-MB-1 286
PSCSL-2414SC-SN-1 286
PSCSL-3014SC-MB-1 286
PSCSL-3014SC-SN-1 286
R09B30SMB1CUF1 394
R09B30SMB1MUF1 394
R09B30SMB1OUF1 394
R09B36SMB1CUF1 394
R09B36SMB1MUF1 394
R09B36SMB1OUF1 394
R09C30SMB1CUF1 394
R09C30SMB1MUF1 394
R09C30SMB1OUF1 394
R09C36SMB1CUF1 394
R09C36SMB1MUF1 394
R09C36SMB1OUF1 394
R1130SMB17UF1 413
R1130SMB1CUF1 413
R1130SMB1MUF1 413
R1130SMB1OUF1 413
R1130SMB1QUF1 413
R1136SMB17UF1 413
R1136SMB1CUF1 413
R1136SMB1MUF1 413
R1136SMB1OUF1 413
R1136SMB1QUF1 413
R16307UF1 412
R1630CUF1 412
R1630MUF1 412
R1630OUF1 412
R1630QUF1 412
R1630XUF1 412
R16367UF1 412
R1636CUF1 412
R1636MUF1 412
R1636OUF 412
R1636QUF1 412
R1636XUF1 412
R19C530SMB17UF1 407
R19C530SMB1CUF1 407
R19C530SMB1MUF1 407
R19C530SMB1OUF1 407
R19C530SMB1QUF1 407
R19C536SMB17UF1 407
R19C536SMB1CUF1 407
R19C536SMB1MUF1 407
R19C536SMB1OUF1 407
R19C536SMB1QUF1 407
R19C830SMB17UF1 407
R19C830SMB1CUF1 407
R19C830SMB1MUF1 407
R19C830SMB1OUF1 407
R19C830SMB1QUF1 407
R19C836SMB17UF1 407
R19C836SMB1CUF1 407
R19C836SMB1MUF1 407
R19C836SMB1OUF1 407
R19C836SMB1QUF1 407
R19C930SMB17UF1 407
R19C930SMB1CUF1 407
R19C930SMB1MUF1 407
R19C930SMB1OUF1 407
R19C930SMB1QUF1 407
R19C936SMB17UF1 407
R19C936SMB1CUF1 407
R19C936SMB1MUF1 407
R19C936SMB1OUF1 407
R19C936SMB1QUF1 407
R19C942SMB17UF1 407
R19C942SMB1CUF1 407
R19C942SMB1MUF1 407
R19C942SMB1OUF1 407
R19C942SMB1QUF1 407
R19SS036SMB17UF1 398
R19SS036SMB1CUF1 398
R19SS036SMB1MUF1 ... 398
R19SS036SMB1OUF1 ... 398
R19SS036SMB1QUF1 ... 398
R19SS042SMB17UF1 398
R19SS042SMB1CUF1 398
R19SS042SMB1MUF1 ... 398
R19SS042SMB1OUF1 ... 398
R19SS042SMB1QUF1 ... 398
R19SS048SMB17UF1 398
R19SS048SMB1CUF1 398
R19SS048SMB1MUF1 ... 398
R19SS048SMB1OUF1 ... 398
R19SS048SMB1QUF1 ... 398
R19T030SMB17UF1 396
R19T030SMB1CUF1 396
R19T030SMB1MUF1 396
R19T030SMB1OUF1 396
R19T030SMB1QUF1 396
R19T030SMB1XUF1 396
R19T036SMB17UF1 396
R19T036SMB1CUF1 396
R19T036SMB1MUF1 396
R19T036SMB1OUF1 396
R19T036SMB1QUF1 396
R19T036SMB1XUF1 396
R19T042SMB17UF1 396
R19T042SMB1CUF1 396
R19T042SMB1MUF1 396
R19T042SMB1OUF1 396
R19T042SMB1QUF1 396
R19T042SMB1XUF1 396
R19T048SMB17UF1 396
R19T048SMB1CUF1 396
R19T048SMB1MUF1 396
R19T048SMB1OUF1 396
R19T048SMB1QUF1 396
R19T048SMB1XUF1 396
R2030SMB17UF1 389
R2030SMB1CUF1 389
R2030SMB1MUF1 389
R2030SMB1OUF1 389
R2030SMB1QUF1 389
R2036SMB17UF1 389
R2036SMB1CUF1 389
R2036SMB1MUF1 389
R2036SMB1OUF1 389
R2036SMB1QUF1 389
R2042SMB17UF1 389
R2042SMB1CUF1 389
R2042SMB1MUF1 389
R2042SMB1OUF1 389
R2042SMB1QUF1 389
R2048SMB17UF1 389
R2048SMB1CUF1 389
R2048SMB1MUF1 389
R2048SMB1OUF1 389
R2048SMB1QUF1 389
R2130SMB17UF1 391
R2130SMB1CUF1 391
R2130SMB1MUF1 391
R2130SMB1OUF1 391
R2130SMB1QUF1 391
R2130SMB1XUF1 391
R2136SMB17UF1 391
R2136SMB1CUF1 391
R2136SMB1MUF1 391
R2136SMB1OUF1 391
R2136SMB1QUF1 391
R2136SMB1XUF1 391
R2142SMB17UF1 391
R2142SMB1CUF1 391
R2142SMB1MUF1 391
R2142SMB1OUF1 391
R2142SMB1QUF1 391
R2142SMB1XUF1 391
R2148SMB17UF1 391
R2148SMB1CUF1 391
R2148SMB1MUF1 391
R2148SMB1OUF1 391
R2148SMB1QUF1 391
R2148SMB1XUF1 391
R21B30SMB17UF1 392
R21B30SMB1CUF1 392
R21B30SMB1MUF1 392
R21B30SMB1OUF1 392
R21B30SMB1QUF1 392
R21B36SMB17UF1 392
R21B36SMB1CUF1 392
R21B36SMB1MUF1 392
R21B36SMB1OUF1 392
R21B36SMB1QUF1 392
R21B42SMB17UF1 392
R21B42SMB1CUF1 392

R21B42SMB1MUF1.....392
R21B42SMB1OUF1.....392
R21B42SMB1QUF1.....392
R21B48SMB17UF1.....392
R21B48SMB1CUF1.....392
R21B48SMB1MUF1.....392
R21B48SMB1OUF1.....392
R21B48SMB1QUF1.....392
R2630SMB17UF1.....393
R2630SMB1CUF1.....393
R2630SMB1MUF1.....393
R2630SMB1OUF1.....393
R2630SMB1QUF1.....393
R2636SMB17UF1.....393
R2636SMB1CUF1.....393
R2636SMB1MUF1.....393
R2636SMB1OUF1.....393
R2636SMB1QUF1.....393
R2642SMB17UF1.....393
R2642SMB1CUF1.....393
R2642SMB1MUF1.....393
R2642SMB1OUF1.....393
R2642SMB1QUF1.....393
R2648SMB17UF1.....393
R2648SMB1CUF1.....393
R2648SMB1MUF1.....393
R2648SMB1OUF1.....393
R2648SMB1QUF1.....393
R2830SMB17UF1.....390
R2830SMB1CUF1.....390
R2830SMB1MUF1.....390
R2830SMB1OUF1.....390
R2830SMB1QUF1.....390
R2836SMB17UF1.....390
R2836SMB1CUF1.....390
R2836SMB1MUF1.....390
R2836SMB1OUF1.....390
R2836SMB1QUF1.....390
R2842SMB17UF1.....390
R2842SMB1CUF1.....390
R2842SMB1MUF1.....390
R2842SMB1OUF1.....390
R2842SMB1QUF1.....390
R2848SMB17UF1.....390
R2848SMB1CUF1.....390
R2848SMB1MUF1.....390
R2848SMB1OUF1.....390
R2848SMB1QUF1.....390
R29SS036SMB17UF1....397
R29SS036SMB1CUF1...397
R29SS036SMB1MUF1..397
R29SS036SMB1OUF1...397
R29SS036SMB1QUF1...397
R29SS042SMB17UF1....397
R29SS042SMB1CUF1....397
R29SS042SMB1MUF1...397
R29SS042SMB1OUF1...397
R29SS042SMB1QUF1...397
R29SS048SMB17UF1....397
R29SS048SMB1CUF1...397
R29SS048SMB1MUF1..397
R29SS048SMB1OUF1...397
R29SS048SMB1QUF1...397
R29T030SMB17UF1.....395
R29T030SMB1CUF1.....395
R29T030SMB1MUF1.....395
R29T030SMB1OUF1.....395
R29T030SMB1QUF1.....395
R29T030SMB1XUF1.....395
R29T036SMB17UF1.....395
R29T036SMB1CUF1.....395
R29T036SMB1MUF1.....395
R29T036SMB1OUF1.....395
R29T036SMB1QUF1.....395
R29T036SMB1XUF1.....395
R29T042SMB17UF1.....395
R29T042SMB1CUF1.....395
R29T042SMB1MUF1.....395
R29T042SMB1OUF1.....395
R29T042SMB1QUF1.....395
R29T042SMB1XUF1.....395
R29T048SMB17UF1.....395
R29T048SMB1CUF1.....395
R29T048SMB1MUF1.....395
R29T048SMB1OUF1.....395
R29T048SMB1QUF1.....395
R29T048SMB1XUF1.....395
R30B30SMB17UF1.....387
R30B30SMB1CUF1.....387
R30B30SMB1MUF1.....387
R30B30SMB1OUF1.....387
R30B30SMB1QUF1.....387
R30B30SMB1XUF1.....387
R30B36SMB17UF1.....387
R30B36SMB1CUF1.....387
R30B36SMB1MUF1.....387
R30B36SMB1OUF1.....387
R30B36SMB1QUF1.....387
R30B36SMB1XUF1.....387
R30B42SMB17UF1.....387
R30B42SMB1CUF1.....387
R30B42SMB1MUF1.....387
R30B42SMB1OUF1.....387
R30B42SMB1QUF1.....387
R30B42SMB1XUF1.....387
R30B48SMB17UF1.....387
R30B48SMB1CUF1.....387
R30B48SMB1MUF1.....387
R30B48SMB1OUF1.....387
R30B48SMB1QUF1.....387
R30B48SMB1XUF1.....387
R30C36SMB17UF1.....388
R30C36SMB1CUF1.....388
R30C36SMB1MUF1.....388
R30C36SMB1OUF1.....388
R30C36SMB1QUF1.....388
R30C36SMB1XUF1.....388
R30C42SMB17UF1.....388
R30C42SMB1CUF1.....388
R30C42SMB1MUF1.....388
R30C42SMB1OUF1.....388
R30C42SMB1QUF1.....388
R30C42SMB1XUF1.....388
R3330SMB37UF1.....399
R3330SMB3CUF1.....399
R3330SMB3MUF1.....399
R3330SMB3OUF1.....399
R3330SMB3QUF1.....399
R3336SMB37UF1.....399
R3336SMB3CUF1.....399
R3336SMB3MUF1.....399
R3336SMB3OUF1.....399
R3336SMB3QUF1.....399
R3342SMB37UF1.....399
R3342SMB3CUF1.....399
R3342SMB3MUF1.....399
R3342SMB3OUF1.....399
R3342SMB3QUF1.....399
R4030SMB17UF1.....409
R4030SMB1CUF1.....409
R4030SMB1MUF1.....409
R4030SMB1OUF1.....409
R4030SMB1QUF1.....409
R4036SMB17UF1.....409
R4036SMB1CUF1.....409
R4036SMB1MUF1.....409
R4036SMB1OUF1.....409
R4036SMB1QUF1.....409
R4130SMB17UF1..... 411
R4130SMB1CUF1..... 411
R4130SMB1MUF1..... 411
R4130SMB1OUF1..... 411
R4130SMB1QUF1..... 411
R4136SMB17UF1..... 411
R4136SMB1CUF1..... 411
R4136SMB1MUF1..... 411
R4136SMB1OUF1..... 411
R4136SMB1QUF1..... 411
R5030SMB17UF1.....409
R5030SMB1CUF1.....409
R5030SMB1MUF1.....409
R5030SMB1OUF1.....409
R5030SMB1QUF1.....409
R5036SMB17UF1.....409
R5036SMB1CUF1.....409
R5036SMB1MUF1.....409
R5036SMB1OUF1.....409
R5036SMB1QUF1.....409
R5130SMB17UF1..... 411
R5130SMB1CUF1..... 411
R5130SMB1MUF1..... 411
R5130SMB1OUF1..... 411
R5130SMB1QUF1..... 411
R5136SMB17UF1..... 411
R5136SMB1CUF1..... 411
R5136SMB1MUF1..... 411
R5136SMB1OUF1..... 411
R5136SMB1QUF1..... 411
R5230SMB17UF1.....409
R5230SMB1CUF1.....409
R5230SMB1MUF1.....409
R5230SMB1OUF1.....409
R5230SMB1QUF1.....409
R5236SMB17UF1.....409
R5236SMB1CUF1.....409
R5236SMB1MUF1.....409
R5236SMB1OUF1.....409
R5236SMB1QUF1.....409

R70302SMB17UF1.....405
R70302SMB1CUF1.....405
R70302SMB1MUF1.....405
R70302SMB1OUF1.....405
R70302SMB1QUF1.....405
R70362SMB17UF1.....405
R70362SMB1CUF1.....405
R70362SMB1MUF1.....405
R70362SMB1OUF1.....405
R70362SMB1QUF1.....405
R7301S30SMB17UF2....385
R7301S30SMB1CUF2....385
R7301S30SMB1MUF2...385
R7301S30SMB1OUF2...385
R7301S30SMB1QUF2...385
R7301S36SMB17UF2....385
R7301S36SMB1CUF2....385
R7301S36SMB1MUF2...385
R7301S36SMB1OUF2...385
R7301S36SMB1QUF2...385
R7301S42SMB17UF2....385
R7301S42SMB1CUF2....385
R7301S42SMB1MUF2...385
R7301S42SMB1OUF2...385
R7301S42SMB1QUF2...385
R7301S48SMB17UF2....385
R7301S48SMB1CUF2....385
R7301S48SMB1MUF2...385
R7301S48SMB1OUF2...385
R7301S48SMB1QUF2...385
RAL-101-1 116
RAS 305-12-0**-1 341
RAS 305-34-0**-1.....341
RAS 305-58-0**-1.....341
RAS-CIB-COVER-R-52.....297
RAS-LGFD-52.....228
RAS-ML-HDSC 179
RAS-ML-HDSCOG..... 179
RAS-SMFD-52.....228
RAS-VIB-COVER-52.....
.....255, 297
RC30B30SMB1X7UF4...386
RC30B30SMB1XCUF4...386
RC30B30SMB1XEUF4...386
RC30B30SMB1XMUF4..386
RC30B30SMB1XOUF4...386
RC30B30SMB1XQUF4...386
RC30B36SMB1X7UF4...386
RC30B36SMB1XCUF4...386
RC30B36SMB1XEUF4...386
RC30B36SMB1XMUF4..386
RC30B36SMB1XOUF4...386
RC30B36SMB1XQUF4...386
RC30B42SMB1X7UF4...386
RC30B42SMB1XCUF4...386
RC30B42SMB1XEUF4...386
RC30B42SMB1XMUF4..386
RC30B42SMB1XOUF4...386
RC30B42SMB1XQUF4...386
RC30B48SMB1X7UF4...386
RC30B48SMB1XCUF4...386
RC30B48SMB1XEUF4...386
RC30B48SMB1XMUF4..386
RC30B48SMB1XOUF4...386
RC30B48SMB1XQUF4...386
RCH19T0307UF1.....402
RCH19T030CUF1 402
RCH19T030MUF1 402
RCH19T030OUF1 402
RCH19T030QUF1 402
RCH19T030XUF1.....402
RCH19T0367UF1.....402
RCH19T036CUF1 402
RCH19T036MUF1 402
RCH19T036OUF1 402
RCH19T036QUF1 402
RCH19T036XUF1.....402
RCH19T0427UF1.....402
RCH19T042CUF1.....402
RCH19T042MUF1.....402
RCH19T042OUF1 402
RCH19T042QUF1 402
RCH19T042XUF1.....402
RCH19T0487UF1.....402
RCH19T048CUF1 402
RCH19T048MUF1 402
RCH19T048OUF1 402
RCH19T048QUF1 402
RCH19T048XUF1 402
RCH29T0307UF1 401
RCH29T030CUF1 401
RCH29T030MUF1 401
RCH29T030OUF1 401
RCH29T030QUF1 401
RCH29T030XUF1 401
RCH29T0367UF1.....401
RCH29T036CUF1 401
RCH29T036MUF1 401
RCH29T036OUF1 401
RCH29T036QUF1 401
RCH29T036XUF1 401
RCH29T0427UF1 401
RCH29T042CUF1 401
RCH29T042MUF1 401
RCH29T042OUF1 401
RCH29T042QUF1 401
RCH29T042XUF1 401
RCH29T0487UF1 401
RCH29T048CUF1 401
RCH29T048MUF1 401
RCH29T048OUF1 401
RCH29T048QUF1 401
RCH29T048XUF1 401
RCH307UF1 400
RCH30CUF1 400
RCH30MUF1 400
RCH30OUF1 400
RCH30QUF1 400
RCH30XUF1 400
RCH367UF1 400
RCH36CUF1 400
RCH36MUF1 400
RCH36OUF1 400
RCH36QUF1 400
RCH36XUF1 400
RCH427UF1 400
RCH42CUF1 400
RCH42MUF1 400
RCH42OUF1 400
RCH42QUF1 400
RCH42XUF1 400
RCH487UF1 400
RCH48CUF1 400
RCH48MUF1 400
RCH48OUF1 400
RCH48QUF1 400
RCH48XUF1 400
RCHT307UF1 400
RCHT30CUF1 400
RCHT30MUF1 400
RCHT30OUF1 400
RCHT30QUF1 400
RCHT30XUF1 400
RCHT367UF1 400
RCHT36CUF1 400
RCHT36MUF1 400
RCHT36OUF1 400
RCHT36QUF1 400
RCHT36XUF1 400
RCHT427UF1 400
RCHT42CUF1 400
RCHT42MUF1 400
RCHT42OUF1 400
RCHT42QUF1 400
RCHT42XUF1 400
RCHT487UF1 400
RCHT48CUF1 400
RCHT48MUF1 400
RCHT48OUF1 400
RCHT48QUF1 400
RCHT48XUF1 400
RHVB400SS 415
RHVB600SSV 416
RHVBF300SS..... 415
RHVBF300SS/RHVB400SS/
RHVB600SSV 417
RL-201-1 116
RL-202-1 116
RV DM KIT.....262, 263
RV-1024-17-10 69
RV-1024-18-10 69
RV-1024-LID-1 70
RV-1024-LID-13-1 70
RV-1024-LID-14-1 70
RV-1024-LID-17-1 70
RV-1024-LID-18-1 70
RV-1024-LID-22-1 70
RV-1024-LID-G-1 70
RV-1024W 69
RV-20-14-6 69
RV-20-6 69
RV-32-11-8..... 69
RV-32-14-8 69
RV-32-17-8..... 69
RV-32-LID-1 70
RV-32-LID-14-1 70
RV-32-LID-17-1 70
RV-32-LID-22-1 70

RV-32-LID-G-1 70
RV-35-13-8 69
RV-35-17-8 69
RV-35-18-8 69
RV-35-8 69
RV-3550-LID-11-1 70
RV-3550-LID-13-1 70
RV-3550-LID-14-1 70
RV-3550-LID-17-1 70
RV-3550-LID-18-1 70
RV-3550-LID-19-1 70
RV-3550-LID-22-1 70
RV-50-11-10 69
RV-50-13-10 69
RV-50-14-10 69
RV-50-17-10 69
RV-50-18-10 69
SBDT-2730-11-1 115
SBDT-2730-A-1 115
SBDT-2730-OG-1 115
SBDT-3336-11-1 115
SBDT-3336-A-1 115
SBDT-3336-OG-1 115
SBDT-3942-11-1 115
SBDT-3942-A-1 115
SBDT-3942-OG-1 115
SBDTF-2730-11-1 114
SBDTF-2730-14-1 114
SBDTF-2730-15-1 114
SBDTF-3336-11-1 114
SBDTF-3336-14-1 114
SBDTF-3336-15-1 114
SBDTF-3942-11-1 114
SBDTF-3942-14-1 114
SBDTF-3942-15-1 114
SBVDT-2124-11-1 271
SBVDT-2124-A-1 271
SBVDT-2124-A-12 271
SBVDT-2730-11-1 271
SBVDT-2730-A-1 271
SBVDT-2730-A-12 271
SBVDT-3336-11-1 271
SBVDT-3336-A-1 271
SBVDT-3336-A-12 271
SBVDTF-2124-11-1 270
SBVDTF-2124-14-1 270
SBVDTF-2124-15-1 270
SBVDTF-2730-11-1 270
SBVDTF-2730-14-1 270
SBVDTF-2730-15-1 270
SBVDTF-3336-11-1 270
SBVDTF-3336-14-1 270
SBVDTF-3336-15-1 270
ST-97-**-4 119
ST50-21*-12 226
ST50-21*-52 226
SUT90870MLED 418
T-LOC-1510-06 427
T-LOC-1510-08 427
T-LOC-1510-10 427
T-LOC-1510-12 427
T-LOC-1510-14 427
T-LOC-1510-16 427
T-LOC-1515-06 427
T-LOC-1515-08 427
T-LOC-1515-10 427
T-LOC-1515-12 427
T-LOC-1515-14 427
T-LOC-1515-16 427
T-LOC-1515-18 427
T-LOC-1515-20 427
T-LOC-1575-06 427
T-LOC-1575-08 427
T-LOC-1575-10 427
T-LOC-1575-12 427
T-LOC-1575-14 427
T-LOC-2015-06 427
T-LOC-2015-08 427
T-LOC-2015-10 427
T-LOC-2015-12 427
T-LOC-2015-14 427
T-LOC-2015-16 427
T-LOC-2015-18 427
T-LOC-2015-20 427
T-LOC-3525-14 427
T-LOC-3525-16 427
T-LOC-3525-18 427
TRC-12CR 283
TRC-12MB 283
TRC-12NS-CR 282
TRC-14CR 283
UT-10*-10 225
UT-10*-52 225
UT-12*-20 225
UT-12*-52 225
UT-15*-20 225
UT-15*-52 225
UT-18*-10 225
UT-18*-52 225
VIB-20CR 255, 297



Luxury
Lives in the Details.

In a home shaped by thoughtful design, luxury lives in the details. Rev-A-Shelf® and Tresco Lighting® bring a quiet sophistication to cabinetry through refined organization and purposeful illumination. Elegant storage creates order behind closed doors, while integrated lighting adds warmth, depth and clarity throughout the space. Together, these elements form a home that feels composed, intentional and effortlessly functional.

Where beauty and utility exist in perfect balance.







REV-A-SHELF
tresco lighting
Innovation through Organization™



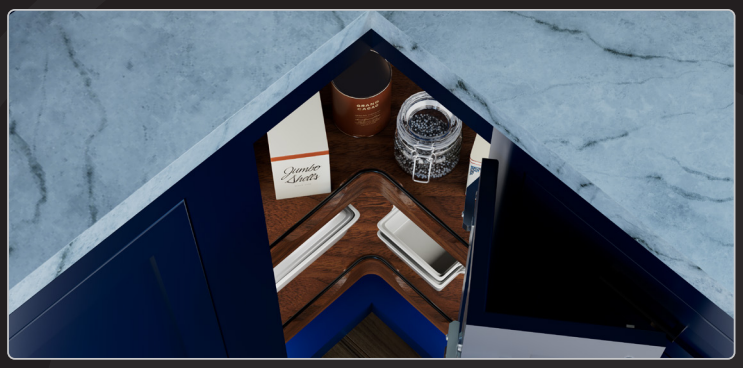







LUXURY





REDEFINED.







CRAFTSMAN
COLLECTION

Omega National
PRODUCTS
By:
REV-A-SHELF



TIMELESS WOOD HOODS, FLOATING SHELVES & BRACKETS


REV-A-SHELF



KITCHEN DEALER PROGRAM

Rev-A-Shelf's Kitchen Dealer Program is the perfect solution for cabinet shops and designers. Our program binder is designed to help you add value with Rev-A-Shelf® products to all of your kitchen projects. Members are sent quarterly updates on the latest innovations from Rev-A-Shelf®. Ask your authorized distributor to sign you up today!

REV-A-SHELF®
Innovation through Organization™

DISPLAY PROGRAM

Our complete line of cabinet storage organizing accessories boast distinct advantages in strength, design, ease of installation and aesthetics that can only be sold effectively through working displays. Many of our customers experience great results by installing products in kitchen dealer, custom shops and home center kitchen and bath displays. We also have floor displays and salesman samples available that can further serve as effective tools.

Our Program: A 50% discount is available to you, the distributor, for each display product unit placed in a showroom or display unit placed in a showroom or display fixture. Verification of installment to claim the rebate should be handled through your Rev-A-Shelf®representative on a monthly basis. Proper documentation with contact info must be provided for each discounted product.

⚠ PROP 65 FOR CALIFORNIA RESIDENTS

The safety of our customers and employees is of highest priority for Rev-A-Shelf. We want to assure you of our 30 + year commitment to offering among the highest quality and safest products in the industry. Rev-A-Shelf® has always abided by state and federal regulations. California voters approved Proposition 65 in 1986, creating the Safe Drinking Water and Toxic Enforcement Act. Despite differing opinions about recent California label requirements with this California law, Rev-A-Shelf® must honor these compliance regulations.

Most importantly, we promise to also honor the trust you have placed in us with your purchase or possible purchase of our products. We will honor your trust by offering organizational products of enduring quality, lasting beauty and uncompromising safety to you and your family.

DISCLAIMER

Rev-A-Shelf makes every effort to verify and ensure that our product specifications are correct and up to date. We reserve the right to make engineering changes that affect any critical product dimension without notice. Rev-A-Shelf® shall not be held liable for any cost related to such a change, misprint, instruction, or product template error.

WARRANTY

Rev-A-Shelf® Company, LLC ("Rev-A-Shelf®") warrants its products (including but not limited to those with the Rev-A-Shelf®, Omega National Products®, Tresco Lighting® brands) (herein, "products") to be free from defects in material and workmanship for a limited period of time from the date of original purchase as specified in the Rev-A-Shelf® Company, LLC limited warranty duration chart ("Duration chart") at. You may also contact Rev-A-Shelf® at 1.800.626.1126 for a copy of the duration chart. This warranty is limited to the original end user of the products.

Because Rev-A-Shelf® cannot control the quality of products sold by unauthorized sellers, this limited warranty applies only to products that were purchased from Rev-A-Shelf® or a Rev-A-Shelf® authorized seller, unless otherwise prohibited by law. Rev-A-Shelf® reserves the right to reject warranty claims for products purchased from unauthorized sellers, including unauthorized internet sites.

This limited warranty also does not cover any defects due to normal wear and tear, damage due to misuse, alteration to the product, negligence or for any failure of the products that results from external causes such as: acts of nature; physical damage; exposure to adverse or hazardous chemical or other substances, use of reactive cleaning agents and/or harsh chemicals to clean the products; environmental conditions; vandalism; fire; power failure, improper power supply, power surges or dips; improper use, installation, handling, alteration, storage, the failure to abide by any product classifications or certifications, or failure to comply with any applicable standards, codes, recommendations, product specification sheets or instruction sheets by Rev-A-Shelf®; failures or performance issues arising from use of the products with third party products, processes or materials supplied by any end user or third party. This limited warranty also does not cover any replaceable batteries included with items or cords of any type.

There are no warranties which extend beyond those stated herein. Any implied warranties that may be applicable to products, including implied warranties of merchantability or fitness for a particular purpose, are limited in duration to the duration of this warranty. Some states do not allow limitations on how long an implied warranty lasts, so the above limitation may not apply to you. Rev-A-Shelf® shall not be liable for incidental or consequential losses, damages or expenses, directly or indirectly arising from the sale, handling or use of the products, or from any other cause relating directly or indirectly thereto, and Rev-A-Shelf®'s liability in any case is expressly limited to the repair or replacement (in the form originally shipped) of the defective products, or at Rev-A-Shelf®'s election, to the repayment of, or credit of, claimant with an amount equal to the purchase price of such product, whether such claims are for breach of warranty, negligence, or otherwise. Any action for damage must be commenced after the accrual of the cause of action. Some states do not allow the exclusion or limitation of incidental or consequential damages, so the above limitation or exclusion may not apply to you. This warranty gives you specific legal rights, and you may also have other rights which vary from state to state.

To make a warranty claim, please contact Rev-A-Shelf® at 1.800.626.1126 and be prepared to answer questions regarding the product and its condition, the original date of purchase and from whom you purchased the product. Rev-A-Shelf® reserves the right to request proof of purchase, in it its sole discretion.

Rev-A-Shelf® shall have the right to require the claimant, at claimant's expense, to return to a designated factory for inspection or repair any product claimed to be defective. The determination of Rev-A-Shelf® as to the existence of a valid claim for replacement, repair, refund or Rev-A-Shelf® credit under this warranty, shall be conclusive. Claimant shall be responsible for the labor costs in removing a defective product. Claimant shall also be responsible for the shipping and handling costs associated with any repaired product or replacement product. In limited circumstances, Rev-A-Shelf®, in its sole discretion, may waive such fees. Replacement parts shall be furnished F.O.B. Factory. Any product that is returned without production code stickers or stamps will automatically be denied under these warranty terms.

DISCLAIMER

Warranty Effective Date: October 1st, 2024

Rev-A-Shelf makes every effort to verify and ensure that our product specifications are correct and up to date. However we reserve the right to make engineering changes that affect any critical product dimension without notice. Rev-A-Shelf shall not be held liable for any cost related to such change, misprint, instruction, or product template error.

REV-A-SHELF®

Innovation through Organization™



WE ARE HONORED!

Rev-A-Shelf is a proud sponsor of the nonprofit organization, Homes for Our Troops, which builds specially adapted, mortgage-free homes nationwide for the most severely injured Veterans of Post 9/11, to enable them to rebuild their lives. During the three year partnership, Rev-A-Shelf will work with Homes for Our Troops' Veterans and general contractors to furnish all homes with cabinet storage and organization accessories, providing optimal accessibility for home recipients. "We are honored to participate in this program to supports our nation's brave service members," said David Noe, general manager of Rev-A-Shelf, LLC. "Homes for Our Troops is doing an excellent service for America's injured Veterans, and we are proud to partner with this wonderful organization."

(HFOT) is a privately funded 501(c) (3) nonprofit organization that builds specially adapted, mortgage-free homes nationwide for the most severely injured Veterans from Iraq and Afghanistan. Most of these Veterans have sustained life-altering injuries including multiple limb amputations, partial or full paralysis, and/or severe traumatic brain injury (TBI). These homes restore some of the freedom and independence our Veterans sacrificed while defending our country, and enable them to focus on their family, recovery, and rebuilding their lives. Since its founding in 2004, nearly 90 cents of every dollar donated to HFOT has gone directly to our program services for Veterans. HFOT builds these homes where the Veteran chooses to live, and continues its relationship with the Veterans after home delivery to assist them with rebuilding their lives. For more information about Rev-A-Shelf's partnership with Homes for Our Troops, visit www.hfotusa.org.

800.626.1126 | rev-a-shelf.com